User Manual

JBL-HYB-12K-1PL

V1.0

CONTENTS

1 Notes on this manual ..... - 3 -

1.1 Validity ..... - 3 -

1.2 Symbols in this document ..... - 3 -

1.3 Storage ..... - 5 -

2 Overview ..... - 5 -

2.1 Product Introduction ..... - 5 -

2.2 Appearance ..... - 6 -

3 Installation ..... - 6 -

3.1 Check for Physical Damage ..... - 6 -

3.2 Packing List ..... - 6 -

3.3 Mounting ..... - 8 -

3.4 Space Requirement ..... - 9 -

3.5 Mounting Steps ..... - 9 -

4 Electrical Connection ..... - 11 -

4.1 PV Connection ..... - 12 -

4.2 Battery Connection ..... - 13 -

4.3 On-grid & Load & GEN Connection ..... - 14 -

4.4 Earth Connection ..... - 16 -

4.5 Communication Connection ..... - 17 -

5 Powering On the System ..... - 22 -

5.1 Suggested turn-on the inverter step: ..... - 22 -

5.2 Notes on PV simulation sources ..... - 23 -

6 Powering Off the System ..... - 23 -

7 LCD Operation ..... - 24 -

7.1 Home Interface ..... - 24 -

7.2 Working status Interface ..... - 26 -
7.2.1 Solar working status interface ..... - 26 -
7.2.2 Grid working status interface ..... - 27 -
7.2.3 Inverter working status interface ..... - 29 -
7.2.4 Battery working status interface ..... - 30 -
7.2.5 Load working status interface ..... - 32 -
7.3 Setting Interface ..... - 34 -
7.3.1 Enter setting interface ..... - 34 -
7.3.2 Setting for Work with Grid ..... - 34 -
7.3.3 Back-up setting ..... - 37 -
7.3.4 PV Setting ..... - 37 -
7.3.5 Battery Setting ..... - 38 -
7.3.6 Grid Setting ..... - 39 -
7.3.7 GEN Port Setting ..... - 40 -
7.3.8 Parallel Setting ..... - 42 -
7.3.9 System Setting ..... - 43 -

8 Maintenance and Cleaning ..... - 44 -

8.1 Maintain Periodically ..... - 44 -
8.2 Trouble shooting ..... - 45 -

9 Decommissioning ..... - 47 -

9.1 Remove the Inverter ..... - 47 -
9.2 Packaging ..... - 47 -
9.3 Storage and Transportation ..... - 48 -

10 Technical Data ..... - 48 -

11 Appendix ..... - 51 -

12 Manufacturer's Warranty ..... - 51 -

13 Contact ..... - 52 -

1 Notes on this manual

1.1 Validity

This manual describes the assembly, installation, commissioning and maintenance of the following hybrid inverters model:

JBL-HYB-12K-1PL

Target Group

This manual is for qualified personnel. Qualified personnel have received training and have demonstrated skills and knowledge in the construction and operation of this device. Qualified personnel are trained to deal with the dangers and hazards involved in installing electric devices.

Additional information

Find further information on special topics in the download area at our website. The manual and other documents must be stored in a convenient place and be available at all times. We assume no liability for any damage caused by failure to observe these instructions. For possible changes in this manual, accepts no responsibilities to inform the users.

1.2 Symbols in this document

Please pay close attention to all the symbols for the purpose of avoiding possible personal injury or equipment break down.

Symbol	Description
DANGER	DANGER indicates a hazardous situation which, if not avoided, will result in death or serious injury.
WARNING	WARNING indicates a hazardous situation which, if not avoided, could result in death or serious injury.
CAUTION	CAUTION indicates a hazardous situation which, if not avoided, could result in minor or moderate injury.
NOTICE	NOTICE is used to address practices not related to personal injury.

Information	Information that you must read and know to ensure optimal operation of the system.

Markings on this product

Symbol	Explanation
	Caution, risk of electric shock.
	Caution, hot surface.
5min	Operation after 5 minutes.
	Read the manual.
	Point of connection for grounding protection.
	CE mark. The inverter complies with the requirements of the applicable CE guidelines.
	The inverter must not be disposed of with the household waste.
Warning: High Temperature!高温危险! Never touch the enclosure of an operating inverter. 逆变器工作时严禁触摸外壳。	Warning, high temperature hazard.

1.3 Storage

The following requirements should be met if the inverter is not put into use directly.

◆ Do not unpack the inverter.

◆ Keep the storage temperature at -25°C to +60°C and the humidity at 5%-95% RH. (non-condensing)

◆ The inverter should be stored in a clean and dry place and be protected from dust and water vapor corrosion.

◆ The number of stacking layers of multiple inverters shall not exceed the limit of stacking layers marked on the outer box.

◆ Periodic inspections are required during the storage. Replace the packing materials if necessary.

◆ If the inverter has been stored for half a year or more, inspections and tests should be conducted by qualified personnel before it is put into use.

2 Overview

2.1 Product Introduction

Function

JBL-HYB-12K-1PL series, also called single phase low-voltage hybrid solar inverters, apply to solar system with participation of PV, battery, loads and grid system for energy management. The energy produced by PV system shall be used to optimize self-consumption, excess power charge battery and the rest power could be exported to the grid. Battery shall discharge to support loads when PV power is insufficient to meet self-consumption. If battery power is not sufficient, the system will take power from grid to support loads.

Models

This document involves the following product models:

JBL-HYB-12K-1PL.

2.2 Appearance

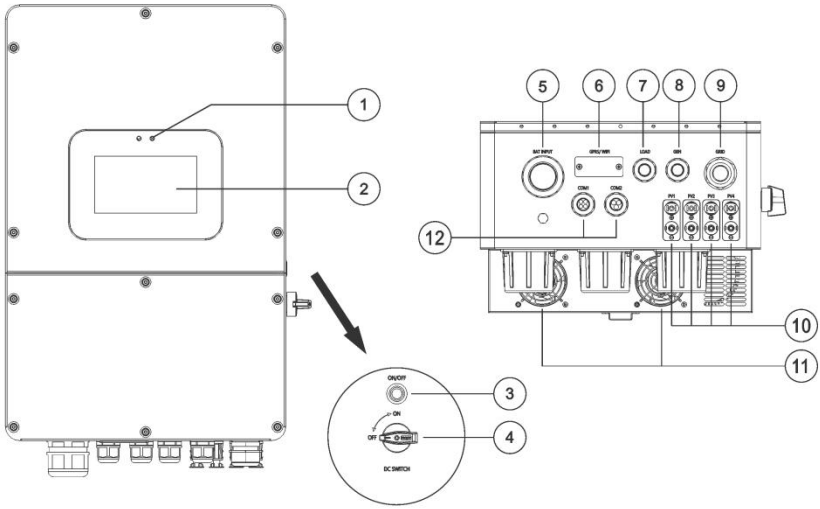

① LED indicator ② LCD display ③ Main switch ④ DC switch

⑤ Battery port ⑥ GPRS/WIFI communication port ⑦ Load port ⑧ GEN port

⑨ On-grid port ⑩ DC input PV terminals ⑪ Cooling fan ⑫ Communication port

LED indicator description

Category	Status	Meaning
LED 1	Green light on	Normal status
	Green light blinking	Alarm status
LED 2	Red light on	Fault status
	Blinking red at short intervals	Software updating

3 Installation

3.1 Check for Physical Damage

Make sure the inverter is intact during transportation. If there is any visible damage, such as cracks, please contact your dealer immediately.

3.2 Packing List

Open the package and take out the product, please check the accessories first.

The packing list shown as below.

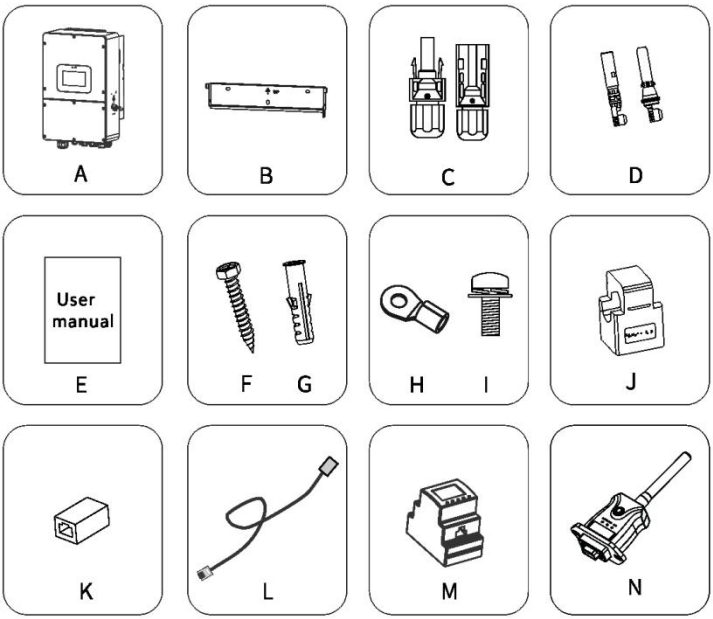

Object	Description	Quantity
A	Inverter	1
B	Bracket	1
C	PV connectors (4*positive, 4*negative)	4/4
D	PV pin connectors (4*positive, 4*negative)	4/4
E	User manual	1
F	Expansion screws	3
G	Expansion tubes	3
H	Ring terminal	1
I	Set screw (for mounting, external enclosure grounding)	3
J	CT	1
*K	RJ45 connector	1
L	Lead-acid battery temperature sensor	1
M	Meter (optional)	1
N	Wi-Fi module	1

*K: When the length of CT wire cannot meet the use requirements, the CT communication wire can be extended through RJ45 connector.

3.3 Mounting

CAUTION	◆ Please wear gloves or other protective equipment throughout the installation process to avoid accidental scratches.

Installation Precaution

JBL-HYB-12K-1PL series inverter is designed for outdoor installation. (IP 66)

Make sure the installation site meets the following conditions:

◆ Not in direct sunlight.

◆ Not in areas where highly flammable materials are stored.

◆ Not in potential explosive areas.

◆ Not in the cool air directly.

◆ Not in environment of precipitation or humidity. (>95%)

◆ Under good ventilation condition.

◆ The ambient temperature should be kept below 45℃ to ensure optimal operation.

◆ The wall hanging the inverter should meet conditions below:

1.Solid brick/concrete, or strength equivalent mounting surface.

2.Inverter must be supported or strengthened if the wall's strength isn't enough. (such as wooden wall, the wall covered by thick layer of decoration)

Please avoid direct sunlight, rain exposure, snow laying up during.

◆ The slope of the wall should be within 15°.

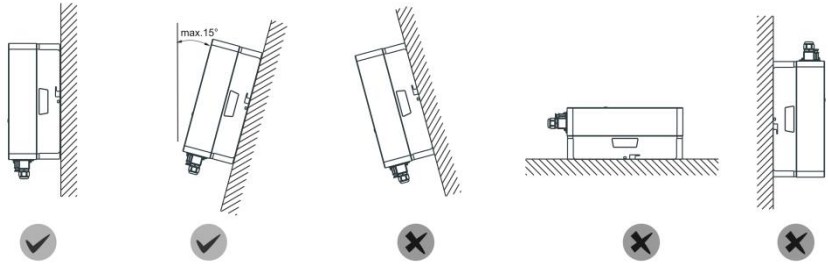

3.4 Space Requirement

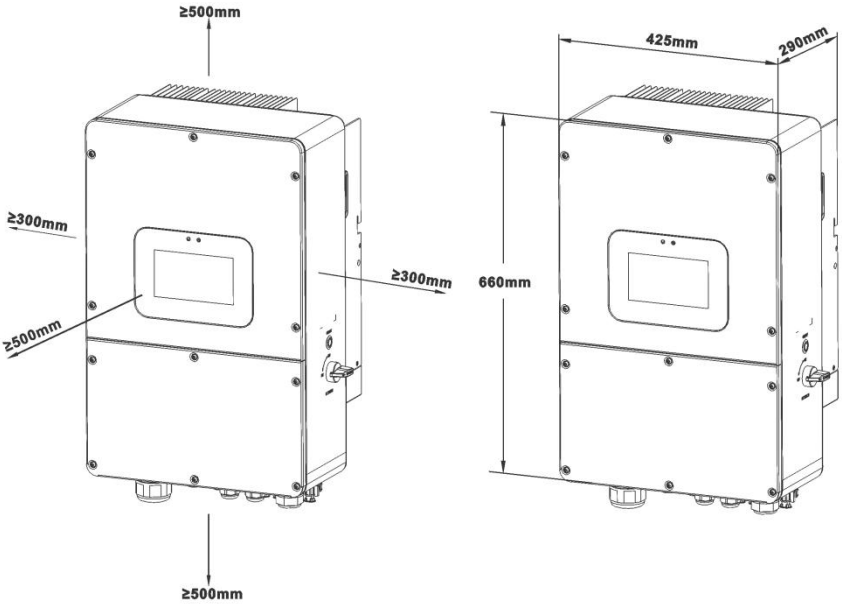

3.5 Mounting Steps

1.Use the wall bracket as a template to mark the position of the 3 holes on the wall. (unit:mm)

2.Drill holes with driller, make sure the holes are deep enough (at least 60mm) for installation, and then tighten the expansion tubes.

3.Install the expansion tubes in the holes, and tighten them. Then install the wall bracket by using the expansion screws. (Φ10 driller, torque: 2.5±0.2N·m)

4.Hang the inverter over the bracket, move the inverter close to it, slightly lay down the inverter, and make sure the 2 mounting bars on the back are fixed well with the 2 grooves on the bracket.

5.After confirming the inverter is fixed reliably, fasten two M5 safety-lock sockets head cap screws on the right or left side firmly to prevent the inverter from being lifted off the bracket. (Torque: 2.0±0.2N·m)

6.According to personal needs, you can install a lock for anti-theft.

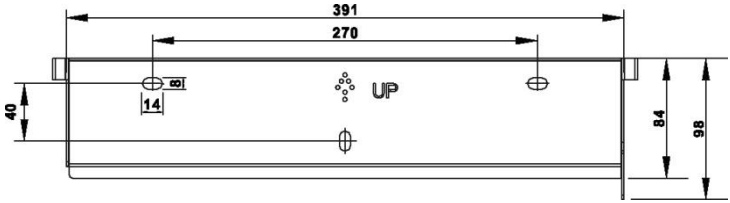

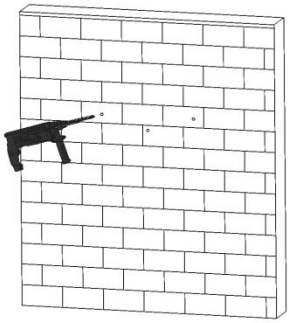

①

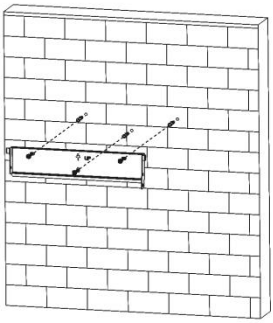

②

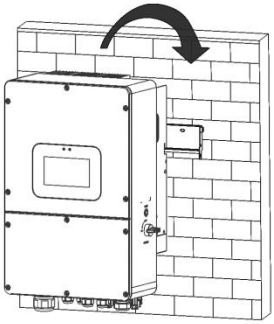

③

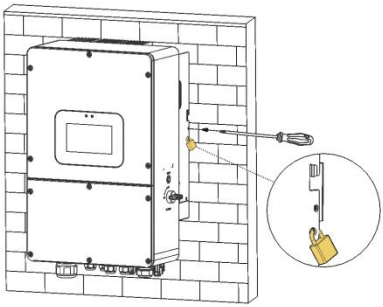

④

4 Electrical Connection

CAUTION	◆ For Australian safety country, the neutral cable of on-grid side and back-up side must be connected together, otherwise back-up function will not work.

System connection diagrams:

This diagram is an example for grid systems without special requirement on electrical wiring connection.

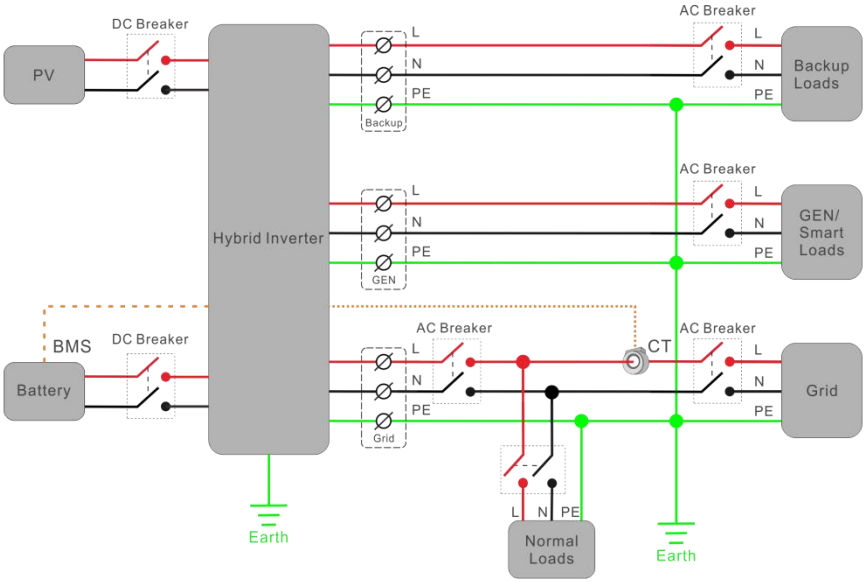

Before connecting all wires, please take off the metal cover by removing screws as shown below:

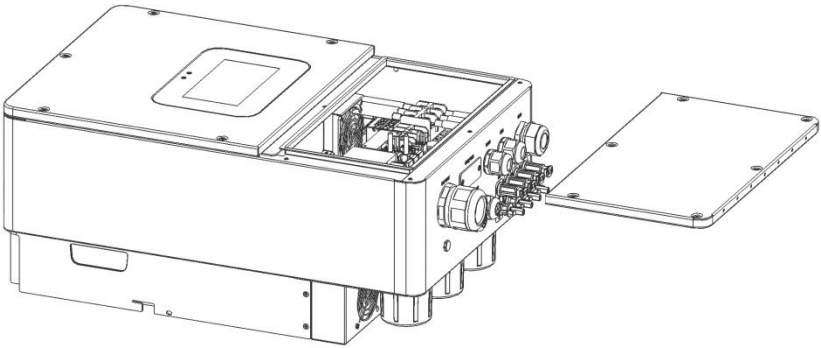

CAUTION	◆ It is recommended that all cables are made of copper core. If aluminum cables are used, use copper-aluminum conversion terminals. Direct contact between copper terminal and aluminum wire will cause electrochemical corrosion and affect the reliability of electrical connection.

4.1 PV Connection

◆ Conditions for DC Connection

The inverter has 4 independent input: PV1 & PV2 & PV3 & PV4, notice that the connectors are in paired (male and female connectors). The connectors for PV arrays and inverters are H4 connectors.

DANGER	The solar modules connected to the inverter must conform to the class A requirements of the IEC 61730 standard.
CAUTION	If the inverter is not equipped with a DC switch but this is mandatory in the country of installation, install an external DC switch. The DC input current of the inverter must not be exceeded 20A.

◆ Connecting the PV array

DANGER	Danger to life due to lethal voltages! ◆ PV array supplies DC voltage to inverter when exposed to light, before connecting the PV array, cover some light screens above PV arrays, ensure that the DC switch and AC breaker are disconnect from the inverter. NEVER connect or disconnect the DC connectors under load. ◆ Make sure the maximum open circuit voltage (Voc) of each PV string is less than the maximum input voltage of the inverter. ◆ Check the design of the PV plant. The max. open circuit voltage, which can occur at solar panels temperature of -10℃, must not exceed the max. input voltage of the inverter.
CAUTION	◆ Improper operation during the wiring process can cause fatal injury to operator or unrecoverable damage to the inverter. Only qualified personnel can perform the wiring work. ◆ Please don't connect PV array positive or negative pole to the ground, it could cause serious damages to the inverter. ◆ Check the connection cables of the PV modules for correct polarity and make sure that the maximum input voltage of the inverter is not exceeded.

Connection Steps:

1.Choose the 12AWG copper wire to connect with the cold-pressed terminal.

2.Remove 7mm of insulation from the end of wire.

3.Insert the insulation into pin contact and use crimping plier to clamp it.

4.Insert pin contact through the cable nut to assemble into back of the male or female plug. When you feel or heard a "click" sound the pin contact assembly is connect correctly.

5.Plug the PV connector into the corresponding PV connector on inverter.

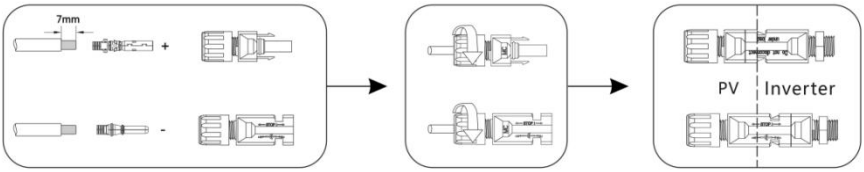

4.2 Battery Connection

◆ Lead-Acid and other similar older-technology battery types require experienced and precise design, installation and maintenance to work effectively. For lead-acid battery bank, the inconformity between battery cells might lead to battery cell over-charge or discharge, and further might damage battery cells and shorten battery bank life.

◆ For lithium battery (pack) the capacity should be 50Ah or larger. Battery cable requirement as below.

Table 1 Cable recommended

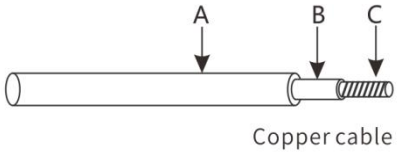	A	O.D	16-20mm
	B	Isolation section	NA
	C	Area	70mm² or 1/0AWG

◆ Please be careful against any electric shock or chemical hazard.

◆ Make sure there is an external DC switch connected for battery without build-in DC switch.

Battery wiring connection steps as below:

CAUTION	◆ Make sure battery switch is off and battery nominal voltage meet specification before connecting battery to inverter and make sure inverter is totally isolated from PV and AC power. ◆ Please make sure polarity (+/-) of battery are not reversed.

1.Choose the appropriate copper wire. (Cable size: refer to table1)

2.Remove appropriate length of insulation from the end of wire.

3.Insert the insulation into pin contact and use crimping plier to clamp it.

4.Insert pin contact through the cable gland, connect the cable to the battery terminal block and lock the cable. (Torque: 10.0N·m)

5.Tighten the nut of the cable gland and apply fireproof mud to seal the contact of the cable gland.

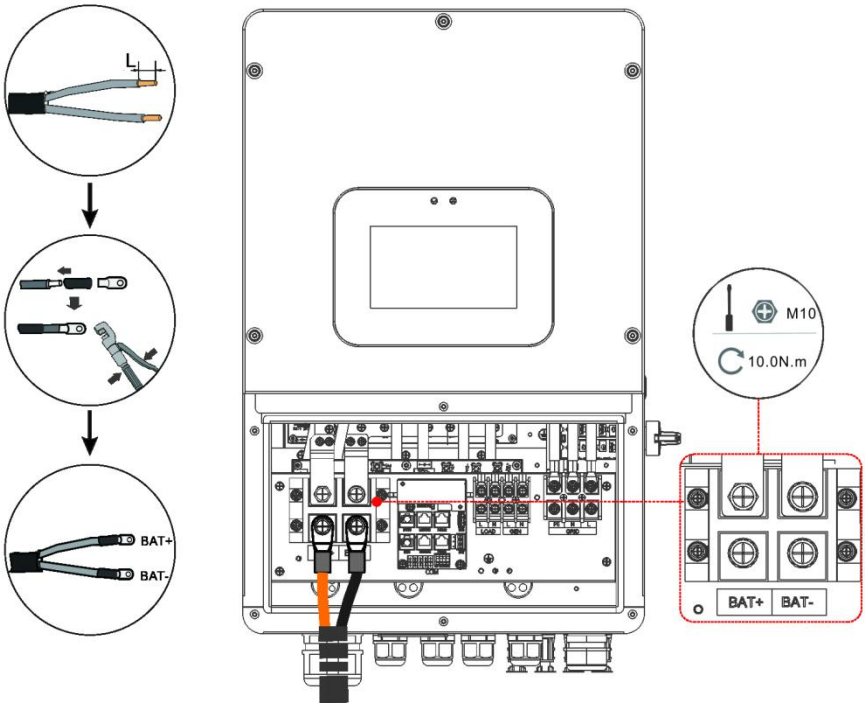

4.3 On-grid & Load & GEN Connection

An external AC switch is needed for on-grid connection to isolate from grid when necessary.

CAUTION	◆ Make sure inverter is totally isolated from any DC or AC power before connecting AC cable.

Connection Steps:

1.Choose the appropriate copper wire. (Cable size: refer to corresponding table)

2.Remove appropriate length "L" of insulation from the end of wire.

3.Insert the insulation into pin contact and use crimping plier to clamp it.

4.Insert pin contact through the cable gland, connect the cable to terminal block and lock the cable. (On-grid torque: 3.0N·m, Load and GEN torque: 2.0N·m)

5.Tighten the nut of the cable gland and apply fireproof mud to seal the contact of the cable gland.

On-grid Connection:

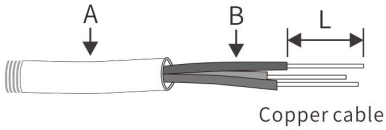	A	Diameter	19-25mm
	B	Area	25mm² or 2AWG

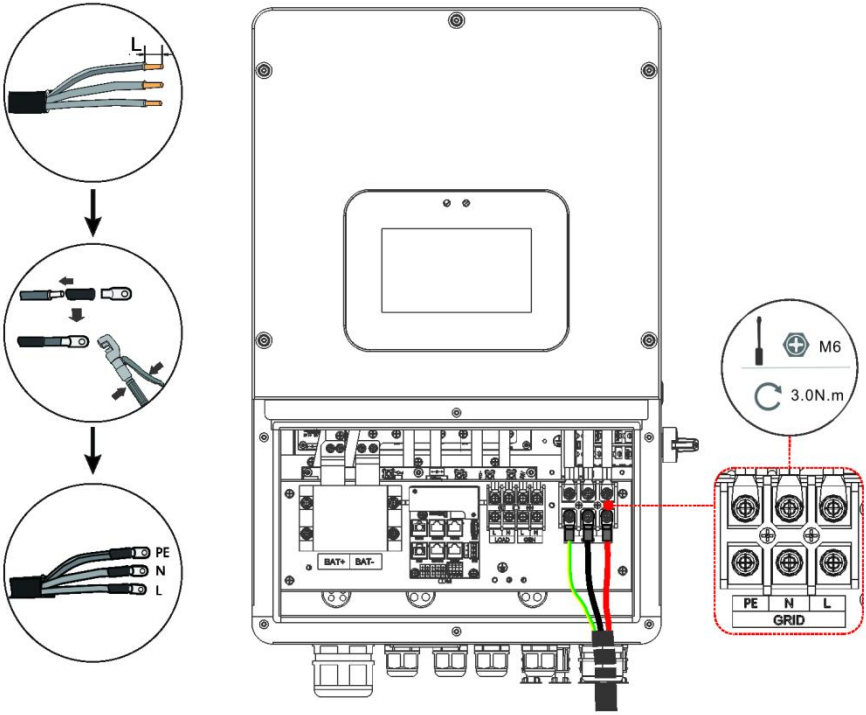

Load & GEN Connection:

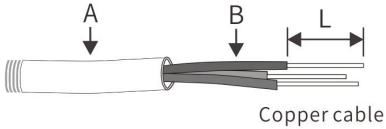	A	Diameter	13-18mm
	B	Area	10mm² or 6AWG

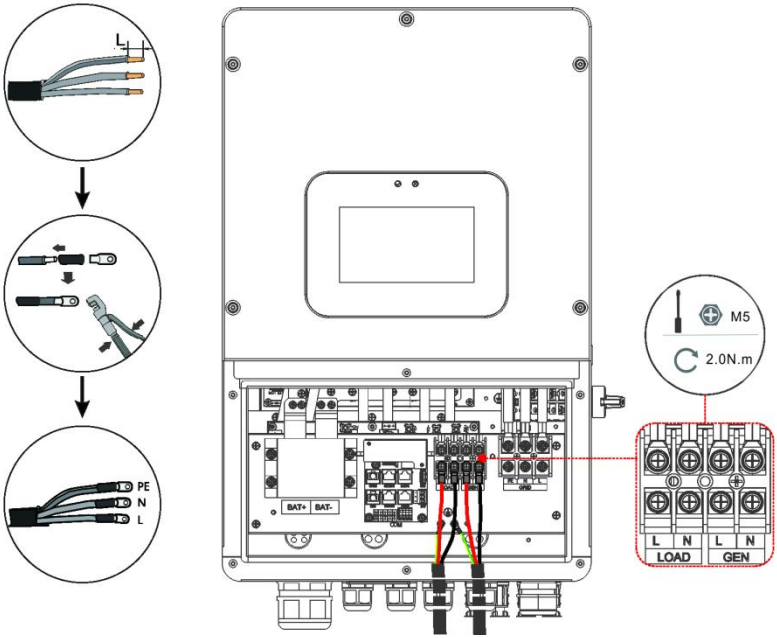

4.4 Earth Connection

Users must additionally earth the inverter to the enclosure of a second earthing or equipotential bonding. This prevents electric shock if the original protective conductor fails.

Earth Connection Steps:

1.Strip the earthing cable insulation and insert the stripped cable into the ring terminal, then clamp it. (Recommended to use a cable with the same cable diameter as the AC output cable or cross-section of the cable ≥4mm²)

2.Place the ring terminal into the earthing rod and screw the earthing screw tightly.

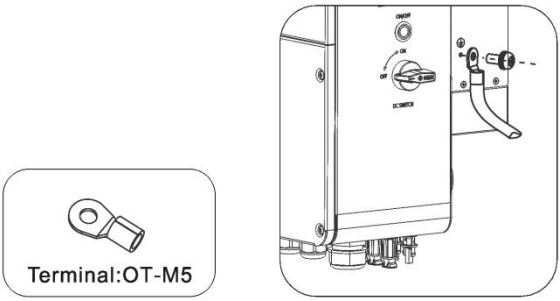

4.5 Communication Connection

1.Function port definition

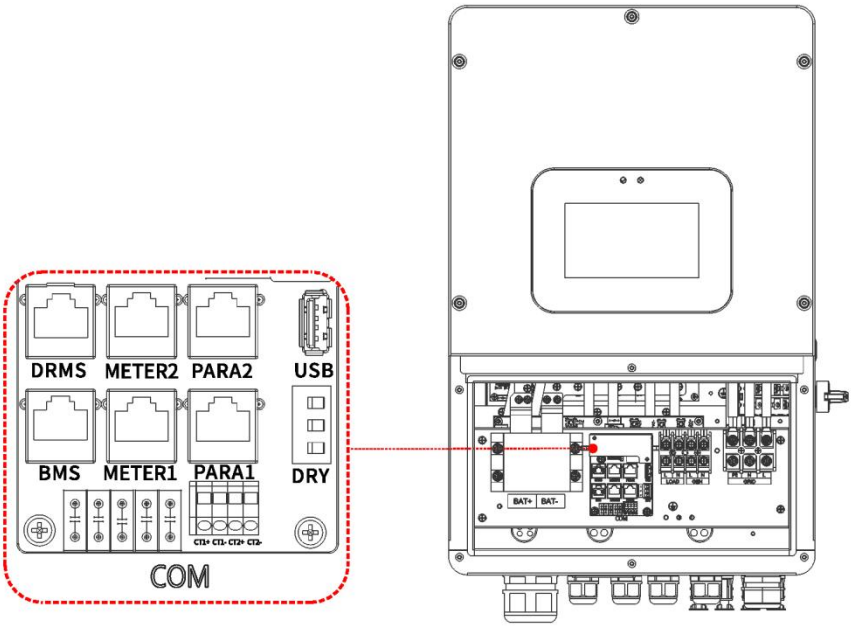

Object	Category	Description
1	BMS	RS485/CAN/NTC port for battery communication
2	DRMS	For Australia market only
3	METER1	Meter communication port 1
4	METER2	Meter communication port 2
5	PARA1	Parallel port 1
6	PARA2	Parallel port 2
7	USB	Upgrade firmware program port
8	DRY	External devices communication port
9	CT1+/CT1-	Current transformer port 1
10	CT2+/CT2-	Current transformer port 2

◆ Make sure use standard RJ45 cable and plug, as below.

Pin	BMS	METER1	DRMS	METER2
1	RS485B	**METER1.485L**	DRM1/5	**METER2.485L**
2	RS485A	EXT-CT1_N	DRM2/6	EXT-CT2_N
3	GND-S	EXT-CT1_N	DRM3/7	EXT-CT2_N
4	CANH	GND-S	DRM4/8	GND-S
5	CANL	**METER1.485H**	DRM_REF	**METER2.485H**
6	NTC.BAT	EXT-CT1_P	DRM_COM	EXT-CT2_P
7	Wake-	EXT-CT1_P	**RS485A**	EXT-CT2_P
8	Wake+	CT1_ON+	**RS485B**	CT2_ON+

2.CT Connection

◆ The CT in product box is compulsory for inverter system installation, used to detect grid voltage and current direction and magnitude, further to instruct the operation condition of inverter via RS485 communication.

CAUTION	◆ Make sure inverter is totally isolated from any DC or AC power before connecting AC cable. ◆ Direction of the CT cannot be connected in reverse, please follow "→" direction to do the connection. Make sure CT are connected between loads and grid.

CT Connection Diagram:

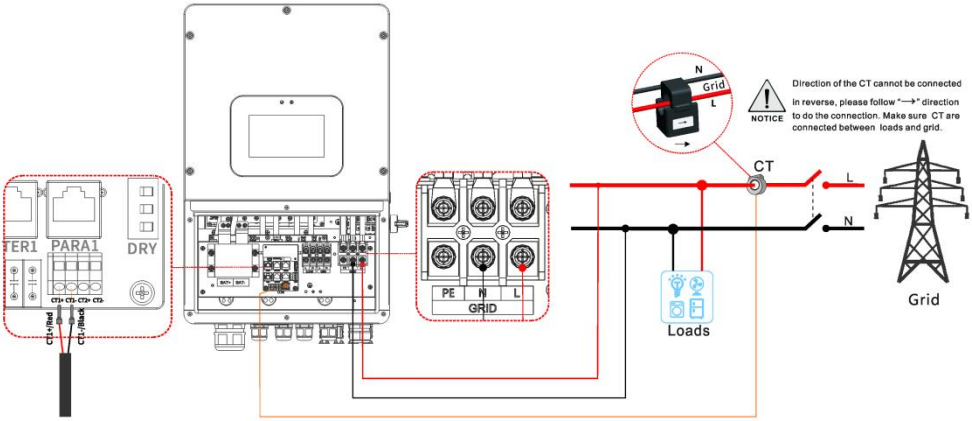

Connection Steps:

1.Uninstall the "CT" cable from the accessory bag.

2.Thread the "CT" cable through the cable gland.

3.Insert the tubular terminal into the "CT1" pin and lock the cable.

The completed appearance is like the below figure.

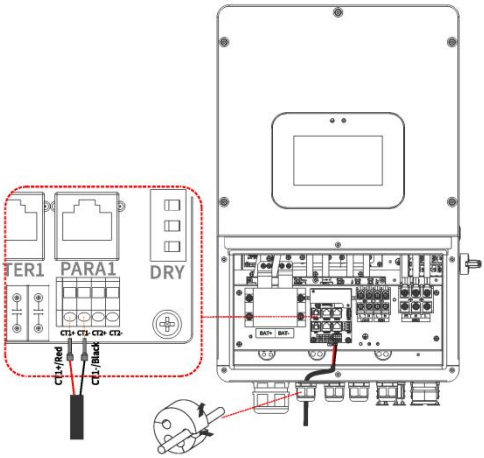

3.Meter Connection

◆ The meter is optional, used to detect grid voltage and current direction and magnitude, further to instruct the operation condition of inverter via RS485 communication.

Meter Connection Diagram:

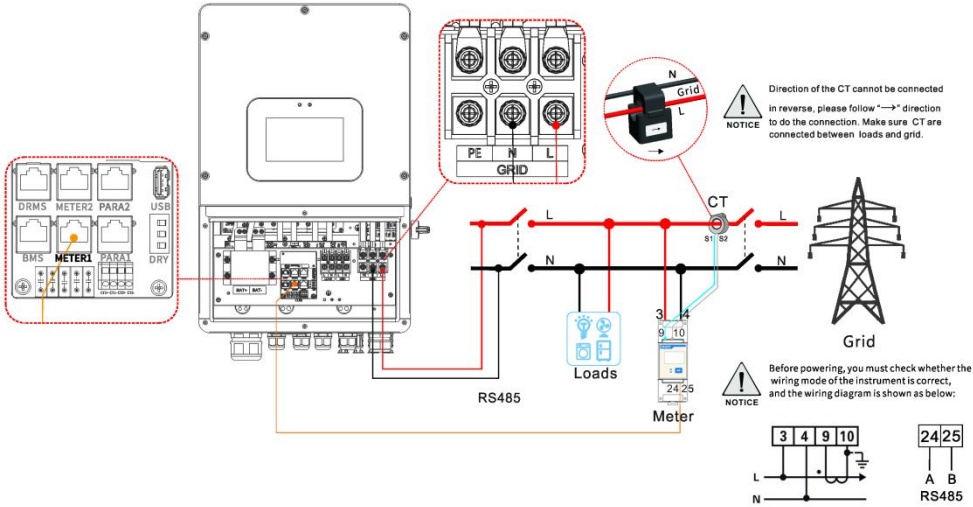

Connection Steps:

1.Uninstall the Meter from the accessory bag.

2.Connect the wires according to the wiring diagram.

3.Crimp the RJ45 plug according to the corresponding pin position and insert it into the "METER1" interface until it clicks into place.

The completed appearance is like the below figure.

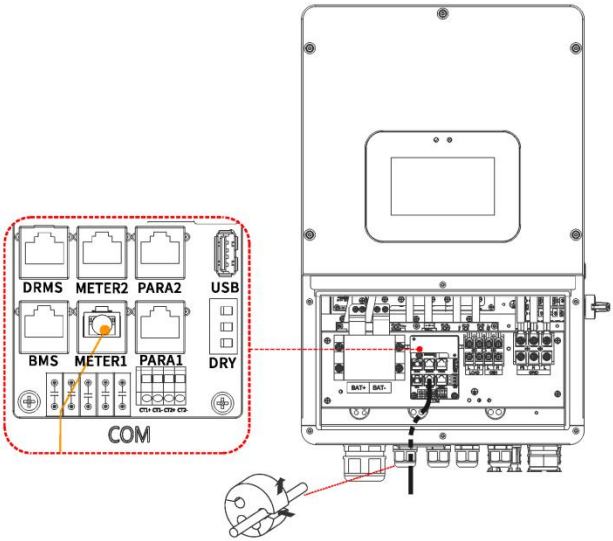

Description	METER1-Pin	**Meter-Pin**
METER1.485L	1	**25**
METER1.485H	5	**24**

4.BMS Connection

◆ Using CAN or RS485 communication with lithium batteries.

◆ Using lead-acid batteries, a temperature sensor must be connected.

CAUTION	◆ If you are using a lead-acid battery, you do not need to install CAN or RS485 communication. ◆ The CAN battery communication and RS485 battery communication can't be installed at same time.

Connection Steps:

1.Prepare communication cable.

2.Thread the "BMS" cable through the cable gland.

3.Insert the RJ45 plug of the network cable into the "BMS" pin until it snaps into place. The other end is connected to the lithium battery.

The completed appearance is like the below figure.

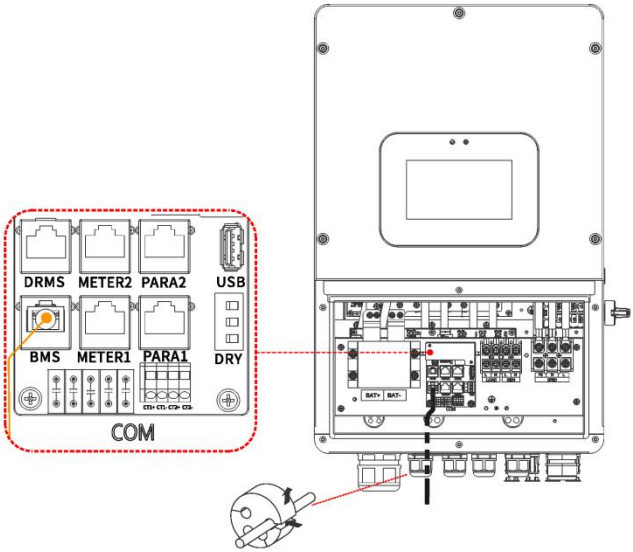

Using lead-acid batteries, the temperature sensor must be in contact with the surface of the lead-acid battery. The completed appearance is like the below figure.

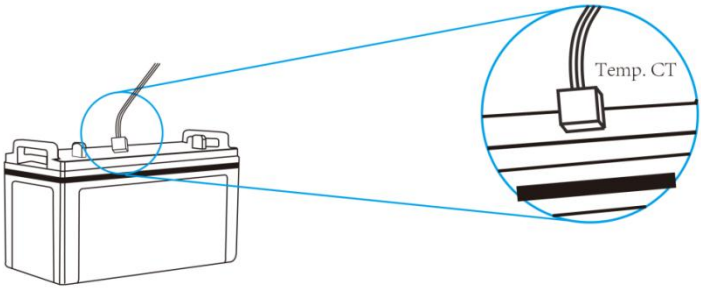

5.DRMS Connection

◆ DRMS is only for Australian and New Zealand installations, in compliance with Australian and New Zealand safety requirements. Detailed connection of DRMS device is shown below:

Connection Steps:

1.Prepare communication cable.

2.Thread the "DRMS" cable through the cable gland.

3.Insert the RJ45 plug of the network cable into the "DRMS" pin until it snaps into place.

The completed appearance is like the below figure.

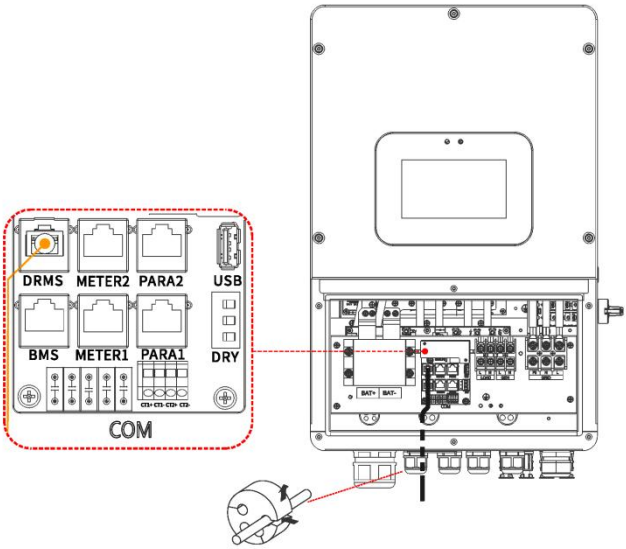

5 Powering On the System

CAUTION	Before turn on the AC switch between the inverter and the power grid, use a multimeter set to the AC position to check that the AC voltage is within the specified range.

5.1 Suggested turn-on the inverter step:

1.Turn on the DC switch between the battery and the inverter.

2.Turn on the DC switch between the PV string and the inverter.

3.Turn on the DC switch on the side of the inverter.

4.Turn on the AC switch between the inverter and the power grid.

5.If the battery is lithium, turn on the switch on the battery.

6.Turn on the main switch on the side of the inverter.

7.Observe the LCDs to check the operating status of the inverter.

5.2 Notes on PV simulation sources

When using PV simulation source testing, you need to start the inverter according to the following steps, otherwise the inverter may be damaged. The inverter manufacturer does not assume after-sales responsibility for machine damage caused by incorrect operation.

1.Turn on the DC switch on the side of the inverter.

2.Set the output parameters of the PV simulation source according to the inverter DC input limit. (the inverter input voltage must be less than the maximum PV input voltage on the inverter nameplate; the inverter input current must be less than the maximum PV input current on the inverter nameplate)

3.Start PV simulation source.

4.Keep the DC switch to “ON” during the test.

6 Powering Off the System

CAUTION	Do not disconnect the DC connectors under load.

Suggested turn-off the inverter step:

1.Turn off the main switch on the side of the inverter.

2.Turn off the AC switch between the inverter and the power grid.

3.Turn off the DC switch between the PV string and the inverter.

4.Turn off the DC switch on the side of the inverter.

5.Turn off the DC switch between the battery and the inverter.

6.Check the inverter operating status.

7.Waiting until LCD have gone out, the inverter is shut down.

7 LCD Operation

LCD operation flow chart:

- Main Screen
  - 1. Solar
    - Solar Info
    - AC Couple Info
  - 2. Grid
    - Grid Info
    - Generator Info
  - 3. Inverter
    - Device Info
    - Inverter Info
    - History
  - 4. Battery
    - Battery Info
    - BMS Info
    - Lead-acid Info
  - 5. Load
    - Load Info
    - Backup Info
    - Smart Load Info
  - 6. System Setting
    - Work Mode with Grid
    - Backup Setting
    - PV Setting
    - Battery Setting
    - Grid Setting
    - GEN Port Setting
    - Parallel Setting
    - System Setting

7.1 Home Interface

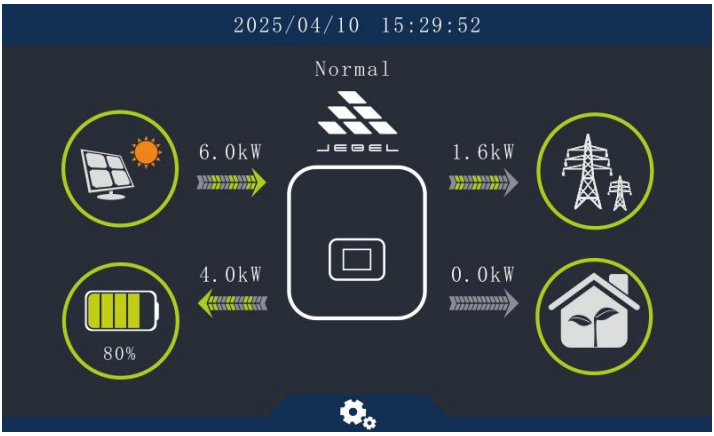

Icon	Name	Description
	Solar	Display various PV parameters in real time. Click the Solar icon to enter the PV working status interface.
	Grid	Display various Grid parameters in real time. Click the Grid icon to enter the Grid working status interface.
	Generator	When there is no grid connection and the GEN terminal is connected, the "Grid" icon displayed on the main page will be changed to the "Generator" icon.
	Inverter	Click the Inverter icon to enter the Inverter working status interface.
	Battery	Display various Battery parameters in real time. Click the Battery icon to enter the Battery working status interface.
	Load	Display various Load parameters in real time. Click the Load icon to enter the Load working status interface.
	Setting	Click the Setting icon to enter the Setting interface.
	Home	Click the Home icon to return the Home interface.
	Back	Click the back button to return to the previous screen.
	Save	Click Save button to save the settings.
	Bar chart	The electricity bar chart shows the inlet.

7.2 Working status Interface

7.2.1 Solar working status interface

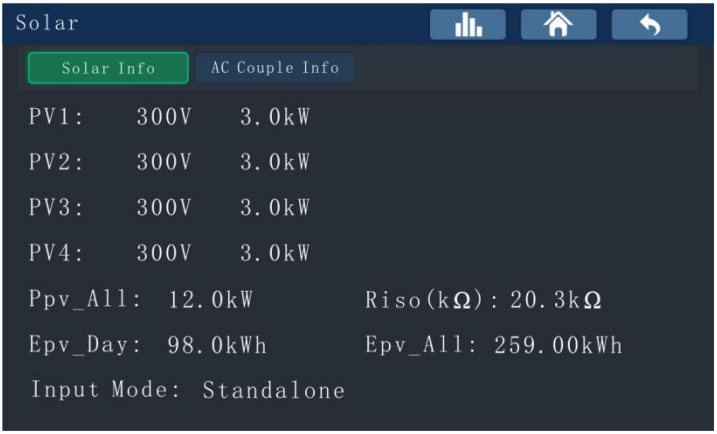

Click the Solar icon on the Home interface to enter the PV working status interface, where you can view the following parameters: real-time voltage and power of each PV, Ppv_All, Riso, Epv_Day, Epv_All, and Input Mode.

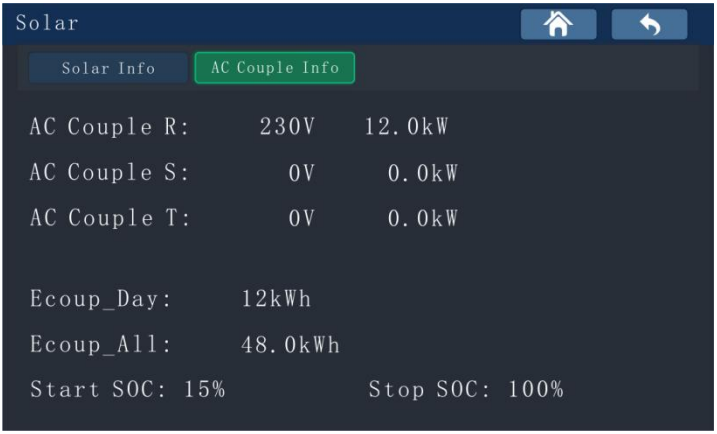

Click the AC Couple Info icon to enter the AC Couple Info working status interface, on which you can view the following parameters:real-time voltage and power of AC Couple R phase, Ecoup_Day, Ecoup_All, Start SOC, Stop SOC.

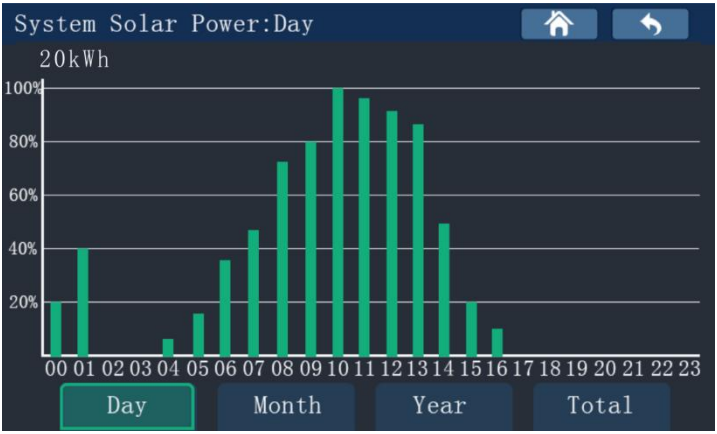

Click the Bar chart icon to enter the PV power bar chart display interface, which allows you to view the daily power bar chart.

Click "Month" to view the monthly power bar chart.

Click "Year" to view the electricity bar chart for each year.

Click "Total" to view the total electricity bar chart.

7.2.2 Grid working status interface

Click the Grid or Generator icon on the Home interface to enter the grid working status interface. On this interface, you can view the following parameters: real-time voltage and power of Grid_R phase, Pgrid_All, Fgrid, Esel_Day, Ebuy_Day, Esel_All, Ebuy_All, and Anti-backflow.

Click the Generator Info icon to enter the Generator Info working status interface. In this interface, you can view the following parameters: real-time voltage and power of Gen_R phase, Pgen_All, Fgen, Egen_Day, Egen_All.

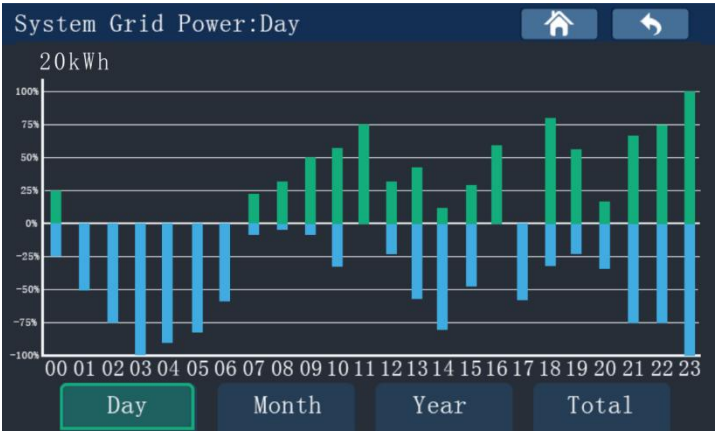

Click the Bar chart icon to enter the Grid power bar chart display interface, which allows you to view the daily power bar chart.

Click "Month" to view the monthly power bar chart.

Click "Year" to view the electricity bar chart for each year.

Click "Total" to view the total electricity bar chart.

7.2.3 Inverter working status interface

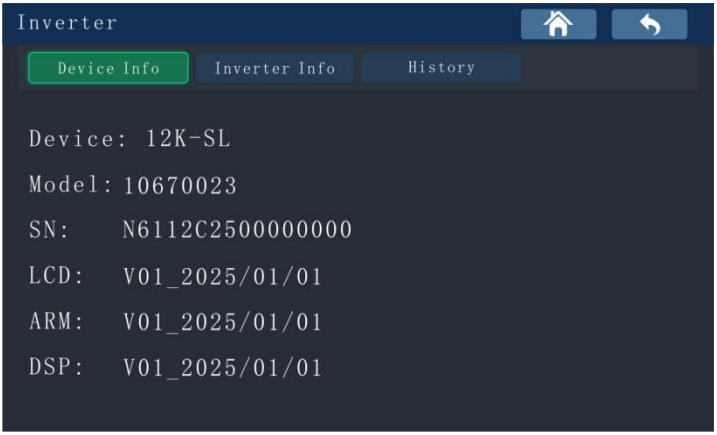

Click the Inverter icon on the Home interface to enter the inverter working status interface. The following parameters can be viewed on this Device Info interface: Device, Model code, SN code, LCD version, ARM version, and DSP version.

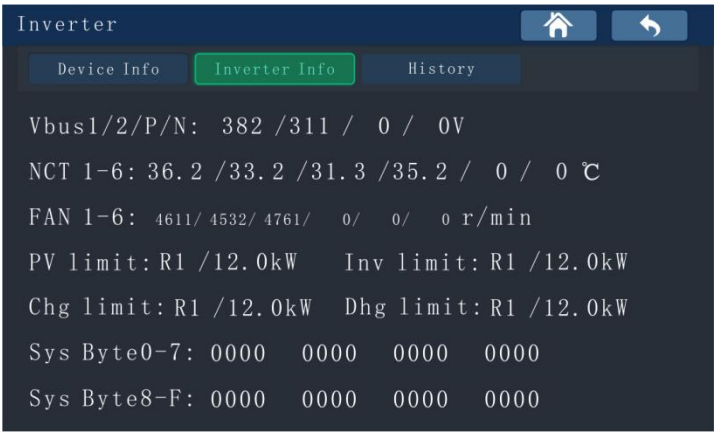

Click the Inverter Info icon to enter the Inverter Info working status interface, where you can view the following parameters: Vbus1/2/P/N, NCT 1-6, FAN 1-6, PV limit, Inv limit, Chg limit, Dhg limit, Sys Byte0-7, Sys Byte8-F.

Click the History icon to enter the History working status interface, where you can find historical alarm records.

7.2.4 Battery working status interface

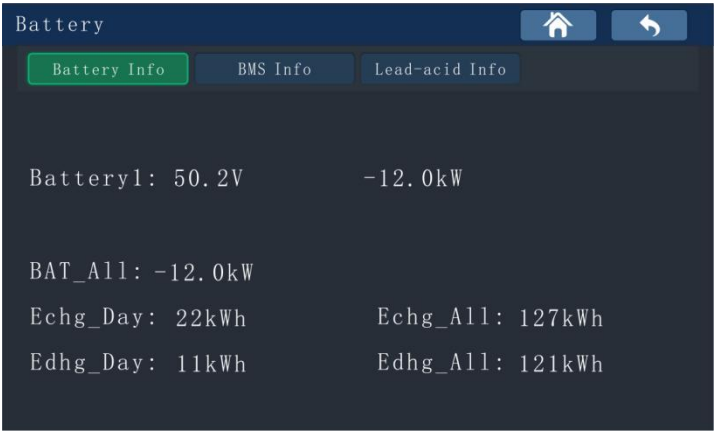

Click the Battery icon on the Home interface to enter the battery working status interface. On BAT Info interface, you can view the following parameters: real-time voltage and power of Battery1, BAT_All, Echg_Day, Edhg_Day, Echg_All, Edhg_All.

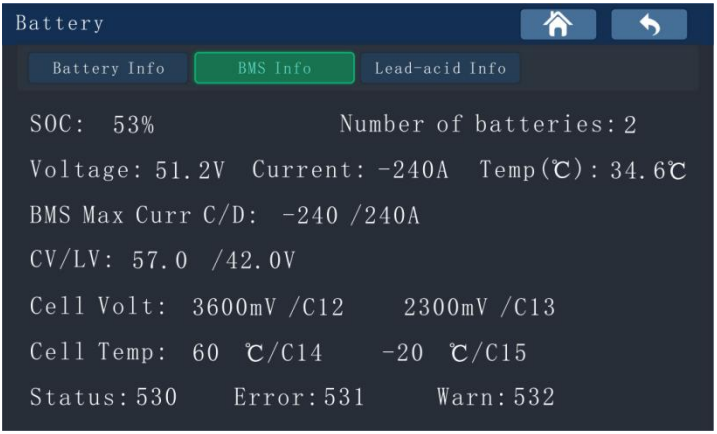

Click the BMS Info icon to enter the BMS Info working status interface. On this interface, you can view the following parameters: BMS SOC, Number of batteries, Voltage, Current, Temp, BMS Max Curr C/D, CV/LV, Cell Volt, Cell Temp, Status, Error, and Warn.

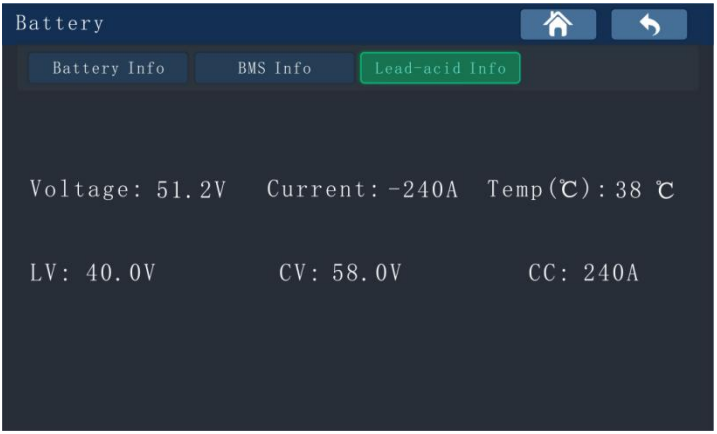

Click the Leadacid Info icon to enter the Leadacid Info working status interface, where you can view the following parameters: Voltage, Current, Temp, LV, CV, and CC.

7.2.5 Load working status interface

Click the Load icon on the Home interface to enter the Load Info working status interface. On this interface, you can view the following parameters: real-time voltage and power of Load_R, Pload_All, Eload_Day, and Eload_All.

Click the Backup Info icon to enter the Backup Info working status interface, where you can view the following parameters: real-time voltage and power of UPS_R.

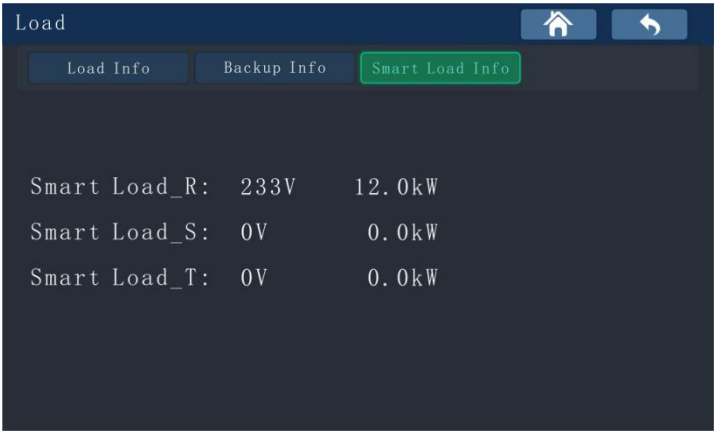

Click the Smart Load Info icon to enter the Smart Load Info working status interface, where you can view the following parameters: real-time voltage and power of Smart Load_R.

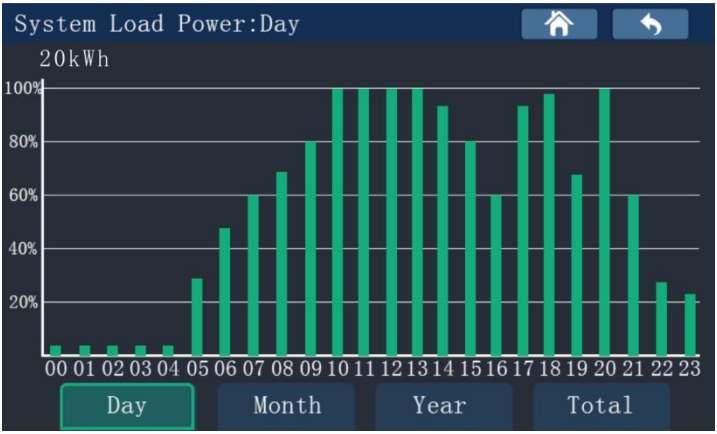

Click the Bar chart icon to enter the Load power bar chart display interface, which allows you to view the daily power bar chart.

Click "Month" to view the monthly power bar chart.

Click "Year" to view the electricity bar chart for each year.

Click "Total" to view the total electricity bar chart.

7.3 Setting Interface

7.3.1 Enter setting interface

Click the Setting icon on the Home interface, you can enter the setting interface. Users can click the icon on the setting interface to enter the setting interface of the corresponding function.

7.3.2 Setting for Work with Grid

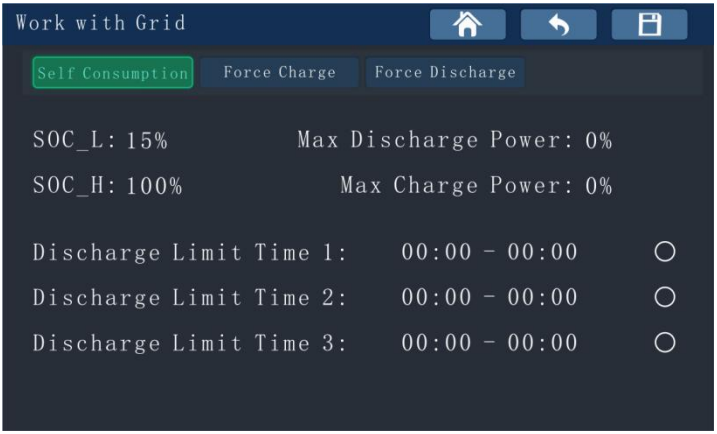

Click the Work Mode with Grid icon on the setting interface to enter the Self Consumption interface. The following parameters can be set on this interface: SOC_L, SOC_H, Max Discharge Power, Max Charge Power, Discharge Limit Time 1, Discharge Limit Time 2, Discharge Limit Time 3.

When the system time of the inverter is not within the forced charging and discharging time set by "PeakLoadShifting", or the forced charge/discharge time of "PeakLoadShifting" is not enabled, the hybrid inverter automatically operates in self-consumption mode. The hybrid inverter detects the power of CT1/Meter1, when the PV is connected and the PV power is greater than the load power, the excess PV power will be output to the grid through CT1/Meter1. At this time, the hybrid inverter automatically uses this excess PV power to charge the battery and reduce the back-flow power to the grid. If there is no PV or the PV power is lower than the load power, the load will take power from the grid through CT1/Meter1. At this time, the hybrid inverter automatically controls the battery discharge to provide energy to the load and reduce the power taken from the grid.

When the hybrid inverter is in "Self Consumption" mode, if the user does not want to discharge the battery for a certain period of time. For example, If the price of utility power is relatively low during a certain period of time, it is more economic to use utility power than battery power. Users can set and enable the limit battery discharge time on the Self consumption Interface. During set time period, the battery is not discharged and the load is powered directly from the utility. The "Self Consumption" mode also support three settable time periods to limit battery discharge.

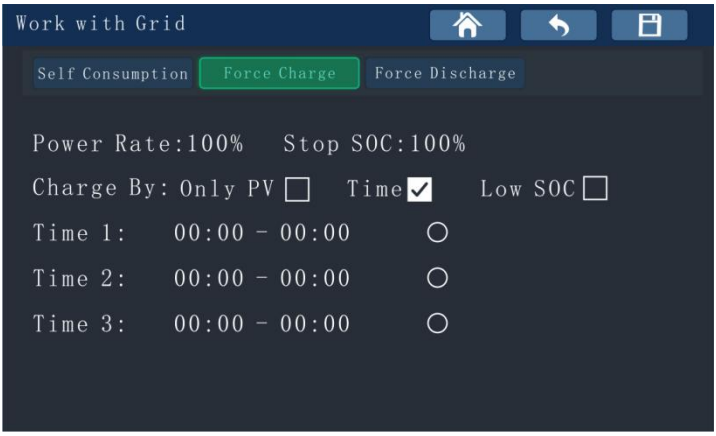

Click the Force Charge icon to enter the forced charging mode setting interface, where you can set the following parameters: Power Rate, Stop SOC, Force charge mode, Time 1, Time 2, and Time 3.

When the utility charging cost is low or the battery SOC is too low, user need to force the battery to be charged.User can set and enable the charge start time and stop time on “Force Charge” interface. Then inverter will charge the battery according to the set charging power (Rated Battery Power*Power Rate) and stop charging when the Battery SOC reaches "Stop SOC". If the PV is connected and select “OnlyPV”, the hybrid inverter charges the battery with PV power only without using the utility power during the charging time period.

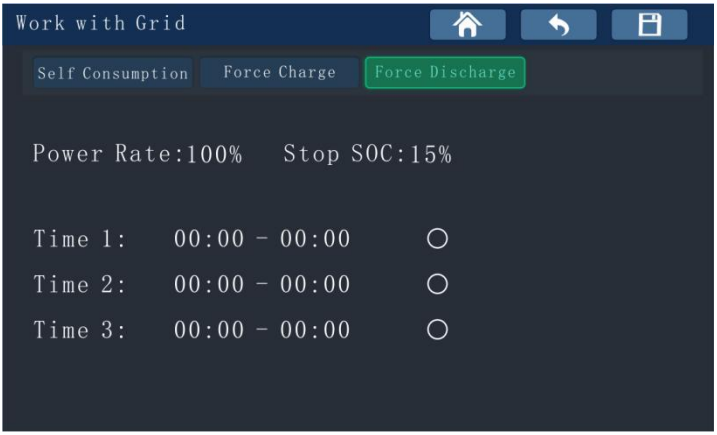

Click the Force Discharge icon to enter the forced discharge mode setting interface. The following parameters can be set on this interface: Power Rate, Stop SOC, Time1, Time2, Time3.

When the selling price of electricity is high or the battery needs to be discharged by use “Force Discharge” function.User can set and enable the discharge start time and stop time on “Force Discharge” interface. Then the inverter will discharge the battery according to the set discharge power (Rated Battery Power*Power Rate) and stop discharging when the discharge SOC reaches "Stop SOC".

"Forced Charge or Forced Discharge Set" is provided with three separate time periods for setting. Users can force charge and force discharge the battery multiple times in one day, just make sure the force charge and force discharge times do not conflict. During the forced charging time period, the battery does not respond to the discharge demand of the load. However, during the forced discharge time period, if the PV power is greater than the rated inverter power, the excess energy of the PV automatically charges the battery.

7.3.3 Back-up setting

Click the Backup Setting icon on the setting interface to enter the off-grid setting interface. The following parameters can be set on this interface: Backup Enable, Backup Voltage, Backup Freq, and UPS Stop SOC.

If the user needs to use the off-grid function when there is no utility power, it is necessary to enable the UPS function and check the corresponding off-grid output voltage and frequency.

BackUp: Disable, off-grid function is not enabled. No output from the backup port when grid outage.

BackUp: UPS, when utility power is available, the backup port is used as a utility bypass, output the same voltage and frequency as per the utility voltage and frequency. After utility power failure, the backup port switch to UPS power mode within 10ms and outputs the "pre-set off-grid voltage and frequency".

7.3.4 PV Setting

Click the PV Setting icon on the setting interface to enter the PV setting interface. The following parameters can be set on this interface: Input Mode, Start Voltage.

7.3.5 Battery Setting

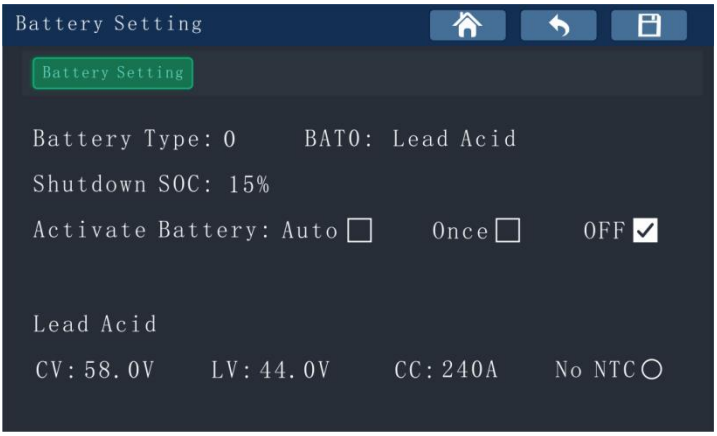

Click the Battery Setting icon on the setting interface, you can enter the battery setting interface. This interface can set the following parameters: Battery Type, Shutdown SOC, Activate Battery, Lead Acid CV constant voltage, CC constant current and LV undervoltage.

Please refer to Appendix 11 to find out which battery brand the number corresponds to.

When using lead-acid batteries, you need to connect the lead-acid battery temperature sensor to the BMS communication port, and stick the other end to a reasonable position of the lead-acid battery. At the same time, set the parameter to "Battery Type: 0", and then set the CV constant voltage, CC constant current and LV undervoltage point for the lead-acid battery.

Default parameters of CC, CV, LV, and adjustable parameter range:

Default Value	Range	Interpretation
240A	0~240A	constant current of lead-acid battery
58.0V	55.0~59.2V	constant voltage of lead-acid battery
47V	44~50V	cut-off voltage of lead-acid battery

Before wiring, please note that the positive and negative poles of any battery power line cannot be reversed at the machine battery port!

7.3.6 Grid Setting

Click the Grid Setting icon on the setting interface to enter the grid setting 1 interface. The following parameters can be set on this interface: Grid Type, Utility Standard, CT Type, CT Ratio, Anti-backflow Enable, and Backflow Power Rate.

Click the Grid Setting2 icon to enter the grid setting 2 interface. The following parameters can be set on this interface: Voltage(high), Voltage(low), Frequency(high), Frequency(low).

When the system is used for SelfConsumption mode, it is necessary to connect the CT/meter to the CT1 port and confirm that the direction and position of the cable at the other end of the

CT/meter whether correct. If not connected, the inverter will report a fault error and cannot operate. Enter the Grid Setting 1 interface and check or set CT Type to CT or meter.

The hybrid inverter has an Anti-backflow/0-export function. User can set and enable the anti-backflow/0-exportfunction on Grid Setting 1 interface. When the system has excess power to feed into the grid, the hybrid inverter limits the power output to the utility to the anti-backflow setting power (rated inverter power * backflow power percentage "Power Rate") via CT1/Meter1. When "AntiBackFlow Enable" is set to ON and the power rate set to 0%, the anti-backflow function is on and inverter cannot feedback to grid; if set to OFF then the inverter can feedback to grid. The Power Rate option is only available when AntiBackFlow Enable is ON. When set to 0%, 0 power is allowed to feed back to the grid; when set to 30%, 30% of the inverter's rated power is allowed to feed to the grid. For example, if the 6KW inverter is set to 30%, it can feed up to 1.8KW to the grid.

7.3.7 GEN Port Setting

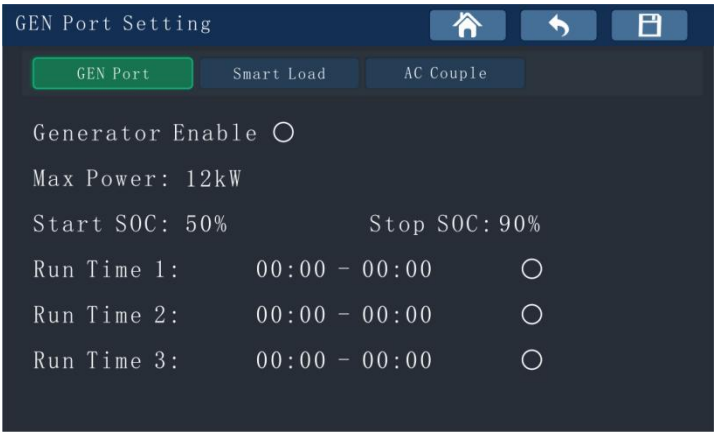

Click the GEN Port Setting icon on the setting interface to enter the generator setting interface. The following parameters can be set on this interface: Generator Enable, Max Power, Start SOC, Stop SOC, Run Time 1, Run Time 2, and Run Time 3.

If the user wants to use the generator function, please click the GEN Port icon to enter the generator setting interface and set the Generator Enable to On, which is "Disabled" by default. MaxPower indicates the maximum output power of the generator, and the generator always runs according to the battery SOC.

For example： Gen Pmax = 6000W, Start SOC = 40%, Stop SOC = 100%.

When battery SOC≤40%, generator starts to power inverter by GEN port and the maximum input power of the generator is 6000W. DRY contact signal is active as well, relay will switch on. When battery SOC≥100%, generator stops to power inverter by GEN port. DRY contact relay will switch off.

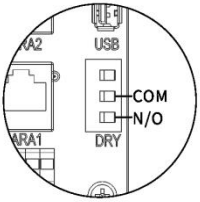

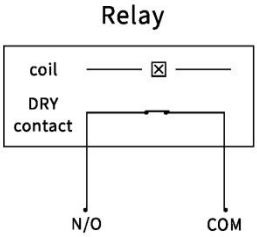

(BAT SOC ≤ Start SOC)

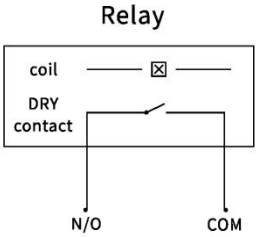

(BAT SOC ≥ Stop SOC)

Please note that the voltage between the DRY contact must not exceed 24V!

Click the Smart Load icon to enter the smart load setting interface, where you can set the following parameters: Smart Load Enable, On-grid Always ON, Start Ppv, Start SOC, Stop SOC.

If user need to use the smart load function, please click the Smart Load icon to enter the smart load setting interface and set the “Smart Load Enable” to On. The default setting is "Disabled". When the “On-Grid Always ON” is set to On and the grid is online, the smart load will always on. Otherwise, the smart load only operates according to the set PV power and battery SOC.

For example: Start Ppv = 1000W, Stop Ppv = 500W, Start SOC = 90%, Stop SOC = 70%.

When PV power ≥ 1000W and battery SOC ≥ 90%, the GEN port starts to supply power to the smart load.

When PV power ≤ 500W or battery SOC ≤ 70%, the GEN port stops supplying power to the smart load.

When operating off the grid, make sure that the total load of the GEN port and the load port does not exceed the total power of the PV and battery input or the rated output power of the inverter.

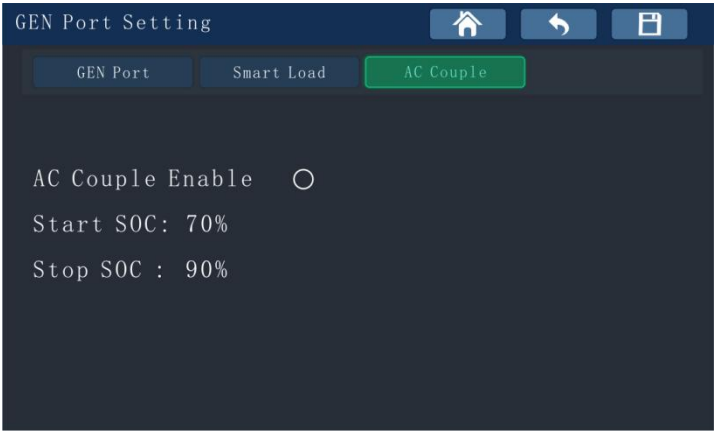

Click the AC Couple icon to enter the AC Couple setting interface, where you can set the following parameters: AC Couple Enable, Start SOC, Stop SOC.

7.3.8 Parallel Setting

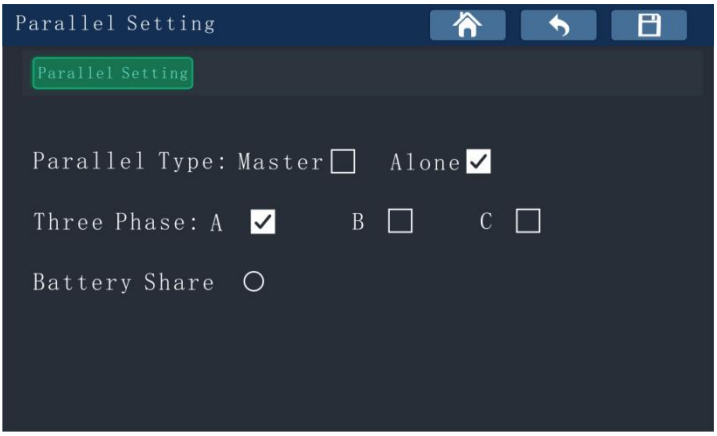

Click the Parallel Setting icon on the setting interface to enter the parallel setting interface. The following parameters can be set on this interface: Parallel Type, Three Phase, Battery Share.

When it is necessary to connect the outputs together using two or more hybrid inverters, please refer to the document "Parallel Connection_Guide_Manual".

7.3.9 System Setting

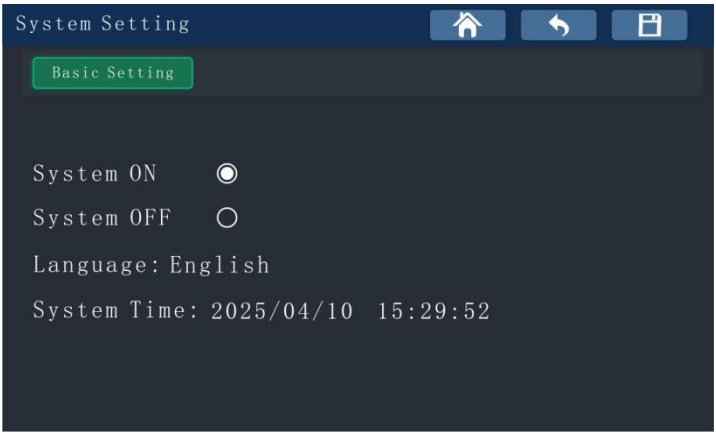

Click the Sys Setting icon on the setting interface to enter the basic setting interface. The following parameters can be set on this interface: System ON, System OFF, Language, System Time.

The hybrid energy storage inverter automatically runs after power-on. You can set the inverter standby mode in the basic settings interface. Open "System ON" for operation mode. Check or reset the system time in the basic settings interface. If logger module is connected, the server will automatically correct the inverter time according to the time zone selected on the monitoring platform. If the time is not set correctly, it may affect the charging and discharging time settings.

8 Maintenance and Cleaning

8.1 Maintain Periodically

1.Checking Heat Dissipation

If the inverter regularly reduces its output power due to high temperature, please improve the heat dissipation condition. Maybe you need to clean the heat sink.

2.Cleaning the Inverter

If the inverter is dirty, turn-off the inverter according to title 6, waiting the inverter shut down, then clean the enclosure lid, the display, and the LEDs using only a wet cloth. Do not use any cleaning agents. (e.g. solvents or abrasives)

3.Checking the DC switch

Check for externally visible damage and discoloration of the DC switch and the cables at regular intervals. If there is any visible damage to the DC switch, or visible discoloration or damage to the cables, contact the installer.

4.Fan Cleaning

Cleaning steps: 1.Turn off the inverter following the shutdown procedure.

2.Wait for 5 minutes until the residual voltage is fully discharged and the fan stops, then clean the exterior.

3.Use a screwdriver to loosen the fan bracket, carefully pull out the fan, and if necessary, disassemble each fan for cleaning.

4.Use a soft-bristle brush, cloth, or compressed air for cleaning.

5.After cleaning, reinstall the fan and bracket, and secure the screws tightly.

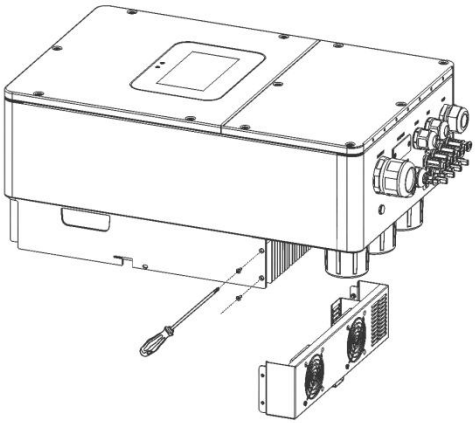

8.2 Trouble shooting

Our quality control program assures that every inverter is manufactured to accurate specifications and is thoroughly tested before leaving our factory. If you have difficulty in the operation of your inverter, please read through the following information to correct the problem.

Alarm ID	Alarm Name	Suggestion
W5	Meter COM Err	1.Check whether the meter matches the inverter protocol. 2.Check the wire connection between meter and inverter is good or not.
W6	PV Short Err!	Check whether the PV line is short-circuited.
W8	BMS COM Err	1.Check the lithium battery is open or not. 2.Check the connection of lithium battery and inverter is good or not.
W11	BAT NTC Open	1.Check the temperature of lead-acid battery is installed or not. 2.Check the temperature of lead-acid battery is connected well or not.
W14	Bat Temp Out	Check the environment temperature of battery is in the range of specification or not.
W15	Over Load!	Please reduce the load of UPS output.
W18	BMS Warn	Check the warning information from lithium battery user manual.
W19	FanStuck	Check whether the fan is faulty.
W26	AC Volt Out	1.Check the AC voltage is in the range of standard voltage in specification. 2.Check the grid connection is good or not.
W27	DCI High	Restart inverter. Please contact the manufacturer if restart can't solve the problem.
W28	No AC Input	1.Please confirm grid is lost or not. 2.Check the grid connection is good or not. 3.Check the switches on the cable are on or not.
W29	AC Freq Out	Check the frequency is in the range of specification or not. Restart inverter. Please contact the manufacturer if restart can't solve the problem.
W30	Bat Reversed	Check the positive and negative of battery is reversed or not.

W31	Battery Open	Check the battery connection is good or not. Check the switches between the battery and inverter are all on or not.
W32	BatVolt High	Check the voltage of battery is in the range of specification or not. Check the battery connection is right or not If battery is really higher than 60V. (The default voltage is 60V, and the actual setting parameters shall prevail) Please disconnect the connection of battery and check inverter.
W33	Bat Volt Low	Check the real voltage of battery. Check the wire of battery and inverter is good or not.
W35	BMS Err	Check the lithium battery error information according to the error code.

Alarm ID	Alarm Name	Suggestion
E0	N-PE Fault!	Check the L line and N line is reversed or not. Check the PE is connected well or not.
E1	PV Iso Low!	Check the connection of PV panels and inverter is good or not. Check the PE of inverter is good or not.
E2	Relay Fault!	Restart inverter. Please contact the manufacturer if restart can't solve the problem.
E3	BusVolt High!	Check the PV input voltage. Do not exceed the range of specification. Restart inverter. Please contact the manufacturer if restart can't solve the problem.
E4	IGBT Fault!	Restart inverter. Please contact the manufacturer if restart can't solve the problem.
E5	Firmware Err!	Read DSP and COM firmware version from LCD. Check if the firmware is correct.
E6	ARM RX Fault!	Restart inverter. Please contact the manufacturer if restart can't solve the problem.
E7	DSP RX Fault!	Restart inverter. Please contact the manufacturer if restart can't solve the problem.
E8	BackUp Short!	Check the load of BackUp. Check the output of UPS. Especial not connect to grid.

E9	AutoTest Err!	Restart inverter. Please contact the manufacturer if restart can't solve the problem.
E10	Model Fault!	Checking model settings. Please contact the manufacturer if restart can't solve the problem.
E11	NTC Open!	Restart inverter. Please contact the manufacturer if restart can't solve the problem.
E12	Sequence Err	Restart inverter. Please contact the manufacturer if restart can't solve the problem.
E13	BDC OTP!	Please check the temperature is in the range of specification or not.
E16	PV Volt High	Please check the voltage of PV input is in the range of specification or not.
E17	Bus UnBLE!	Restart inverter. Please contact the manufacturer if restart can't solve the problem.
E18	BST OTP!	Please check the temperature is in the range of specification or not. Please contact the manufacturer if restart can't solve the problem.
E19	INV OTP!	Please check the temperature is in the range of specification or not. Please contact the manufacturer if restart can't solve the problem.
E22	GFCI High!	Check the cable of inverter. Restart inverter. Please contact the manufacturer if restart can't solve the problem.

9 Decommissioning

9.1 Remove the Inverter

- ◆ Turn off the main switch on the side of the inverter.
- ◆ Disconnect the inverter from DC input and AC output.
- ◆ Wait for 5 minutes for de-energizing.
- ◆ Disconnect communication and optional connection wires.
- ◆ Remove the inverter from the bracket.
- ◆ Remove the bracket if necessary.

9.2 Packaging

- ◆ Please pack the inverter with the original packaging.

◆ If the original package is no longer available, you can also use an equivalent carton that meets the following requirements.

9.3 Storage and Transportation

◆ Store the inverter in a dry environment where ambient temperature keep always between -25°C~+60°C.

◆ When the inverter or other related components need to be disposed. Have it carried out according to local waste handling regulations. Please be sure to deliver wasted inverters and packing materials to certain site, where can assist relevant department to dispose and recycle.

10 Technical Data

Model	JBL-HYB-12K-1PL
Input DC (PV side):	
Max. PV input power	19.2kW
Max. PV input voltage	600V
Nominal input voltage	360V
MPPT working voltage range	80~500VDC
Full load dc voltage range	250~450VDC
Start-up voltage	100VDC
Number of independent MPPT/Strings per MPPT	4/1
MPPT max. current	20A*4
MPPT max. short circuit current	32A*4
Max. inverter backfeed current to the array	0A
Output/Input AC (Grid side):	
Nominal apparent power	12kW
Max. apparent power	13.2kVA
Nominal voltage	220/230V (L/N/PE)

Nominal frequency	50Hz,60Hz/±5Hz
Rated current	54.5A/52.2A
Max. current	60A
Max. AC current from utility grid	100A
Power factor	-0.8~+0.8 (adjustable)
THDi	<3% (Nominal Output)
Grid system pattern	L+N+PE
Inrush current	20A
Maximum output fault current	136A
Maximum output overcurrent protection	136A
Output AC (Back-up):	
Max. output apparent power	13.2kVA
Nominal output power	12kVA
Rated output current	54.5A/52.2A
Nominal output voltage	220/230V (L/N/PE)
Nominal output frequency	50Hz,60Hz/±5Hz
Output THDV	<3%
Automatic switch time	<10ms
Input AC (GEN):	
Max. input current	60A
Nominal input power	12kVA
Battery:	
Battery type	Li-ion/Lead-acid
Nominal voltage	48V
Battery voltage range	40V-60V

Max. charging current	240A
Max. discharging current	240A
Charging strategy for Li-Ion battery	Self-adaption to BMS
Charging strategy for Lead-acid battery	3 Stages
Efficiency:	
Max. MPPT efficiency	99.9%
Europe efficiency	97.5%
Max. battery to load efficiency	94.5%
General Data:	
Dimensions (L/W/H) in mm	425mm*290mm*660mm
Weight	39kg
Operation temperature range	–25°C ... +60°C
Relative humidity	0%-100%RH
Heat dissipation mode	Smart cooling
IP Class	IP66
Over voltage category	DC II; AC III
Pollution degree	PD III
Maximum altitude	4000m (>2000m Power Derating)
Self-consumption night	<3W
Topology	Transformerless
Display	LCD and App
Communication interface	WiFi/4G/USB/CAN/RS485

11 Appendix

Approved battery brand.

Icon	Brand	RS485 or CAN
0	Lead_Acid	/
1	JOHNRAY	CAN
2	PYLON	CAN
3	DYNESS	CAN
4	ATL	CAN
5	GenixGreen	CAN
6	VTC	CAN
7	ZETARA	CAN
8	EVE	CAN
9	KPD	RS485
10	INHENERGY	CAN/RS485
11	SUNKET	CAN
12	SLF-PACE	RS485
13	Genbyte	CAN
14	PACE	CAN/RS485
15	SUG	CAN
16	RITA	RS485
17	Pytes	CAN
18	VESTWOOD	CAN

12 Manufacturer's Warranty

Please refer to the warranty card.

13 Contact

If you have technical problems concerning our products, contact your installer or manufacturer.

During inquiring, please provide below information:

1.Inverter type

2.Modules information

3.Communication method

4.Serial number of inverters

5.Error code of inverters

6.Display of inverter LCD

V1.0, 2026-04-29