SUN2000-(150K-MG0-ZH,150K-MG0)

User Manual

Issue	06
Date	2024-05-20

HUAWEI TECHNOLOGIES CO., LTD.

Copyright © Huawei Technologies Co., Ltd. 2024. All rights reserved.

No part of this document may be reproduced or transmitted in any form or by any means without prior written consent of Huawei Technologies Co., Ltd.

Trademarks and Permissions

HUAWEI and other Huawei trademarks are trademarks of Huawei Technologies Co., Ltd.
All other trademarks and trade names mentioned in this document are the property of their respective holders.

Notice

The purchased products, services and features are stipulated by the contract made between Huawei and the customer. All or part of the products, services and features described in this document may not be within the purchase scope or the usage scope. Unless otherwise specified in the contract, all statements, information, and recommendations in this document are provided "AS IS" without warranties, guarantees or representations of any kind, either express or implied.

The information in this document is subject to change without notice. Every effort has been made in the preparation of this document to ensure accuracy of the contents, but all statements, information, and recommendations in this document do not constitute a warranty of any kind, express or implied.

Huawei Technologies Co., Ltd.

Address: Huawei Industrial Base
Bantian, Longgang
Shenzhen 518129
People's Republic of China

Website: https://e.huawei.com

About This Document

Purpose

This document describes the following inverter models (also referred to as SUN2000) in terms of the safety precautions, product introduction, installation, electrical connections, power-on and commissioning, maintenance, and technical specifications. Read this document carefully before installing and operating the inverter.

- SUN2000-150K-MG0-ZH
- SUN2000-150K-MG0

Intended Audience

This document is intended for:

- Technical support engineers
- Hardware installation engineers
- Commissioning engineers
- Maintenance engineers

Symbol Conventions

The symbols that may be found in this document are defined as follows.

Symbol	Description
DANGER	Indicates a hazard with a high level of risk which, if not avoided, will result in death or serious injury.
WARNING	Indicates a hazard with a medium level of risk which, if not avoided, could result in death or serious injury.
CAUTION	Indicates a hazard with a low level of risk which, if not avoided, could result in minor or moderate injury.

Copyright © Huawei Technologies Co., Ltd.

Symbol	Description
NOTICE	Indicates a potentially hazardous situation which, if not avoided, could result in equipment damage, data loss, performance deterioration, or unanticipated results. NOTICE is used to address practices not related to personal injury.
NOTE	Supplements the important information in the main text. NOTE is used to address information not related to personal injury, equipment damage, and environment deterioration.

Change History

Changes between document issues are cumulative. The latest document issue contains all the changes made in earlier issues.

Issue 06 (2024-05-20)

Updated **5.5 Connecting DC Input Power Cables**.

Issue 05 (2024-03-20)

Updated **1.3 Environment Requirements**.

Updated **2.1 Model**.

Updated **2.2 Networking Application**.

Updated **2.6 Label Description**.

Updated **3 Storage Requirements**.

Updated **4.2 Installation Requirements**.

Updated **5.6 Connecting Signal Cables**.

Updated **8.6 Locating Insulation Resistance Faults**.

Updated **10 Technical Specifications**.

Updated **A Grid Codes**.

Added **D Baud Rate Negotiation**.

Issue 04 (2024-02-02)

Updated **10 Technical Specifications**.

Issue 03 (2024-01-12)

Updated **9 Alarm Reference**.

Updated **10 Technical Specifications**.

 Copyright © Huawei Technologies Co., Ltd.

Issue 02 (2023-12-12)

Updated **5.4 Connecting an AC Output Power Cable**.

Updated **5.5 Connecting DC Input Power Cables**.

Updated **9 Alarm Reference**.

Issue 01 (2023-11-24)

This issue is used for first office application (FOA).

 Copyright © Huawei Technologies Co., Ltd.

Contents

About This Document ii

1 Safety Information 1

1.1 Personal Safety 2
1.2 Electrical Safety 4
1.3 Environment Requirements 7
1.4 Mechanical Safety 9

2 Overview 13

2.1 Model 13
2.2 Networking Application 13
2.2.1 Typical Networking 14
2.2.2 Earthing Systems 16
2.3 Appearance 17
2.4 Circuit Diagram 21
2.5 Working Modes 21
2.6 Label Description 23
2.7 Smart I-V Curve Diagnosis 24

3 Storage Requirements 25

4 Installation 27

4.1 Installation Modes 27
4.2 Installation Requirements 27
4.2.1 Site Selection Requirements 28
4.2.2 Clearance Requirements 30
4.2.3 Angle Requirements 32
4.3 Preparing Tools 33
4.4 Checking Before Installation 34
4.5 Moving the Inverter 35
4.6 Installing the Inverter on a Support 37
4.7 Installing the Inverter on a Wall 38
4.8 Installing the SUN2000 on a Pole Clamp 40

5 Electrical Connections 41

5.1 Precautions 41

 Copyright © Huawei Technologies Co., Ltd.

5.2 Preparing Cables ... 42
5.3 Connecting a PE Cable ... 45
5.4 Connecting an AC Output Power Cable ... 46
5.5 Connecting DC Input Power Cables ... 52
5.6 Connecting Signal Cables ... 59
5.7 (Optional) Installing the Smart Dongle ... 61

6 Checking Before Power-On ... 64

7 Power-On and Commissioning ... 65

7.1 Powering On the Inverter ... 65
7.2 Commissioning Methods and Process ... 71
7.3 Commissioning the SUN2000 (Using the SmartLogger) ... 73
7.3.1 Preparations and SmartLogger WebUI Login ... 73
7.3.2 Software Upgrade ... 73
7.3.3 Commissioning Using the Deployment Wizard ... 74
7.3.4 Parameters Settings ... 77
7.4 Commissioning the SUN2000 (Using the App) ... 77
7.4.1 Downloading the FusionSolar App ... 77
7.4.2 Registering an Installer Account ... 77
7.4.3 Deploying a New Plant ... 78

8 System Maintenance ... 79

8.1 Routine Maintenance ... 79
8.2 Shutdown and Power-Off ... 81
8.3 Power-Off for Maintenance ... 82
8.4 Replacing a Fan ... 83
8.5 Resetting and Turning On the DC Switch ... 87
8.6 Locating Insulation Resistance Faults ... 87

9 Alarm Reference ... 91

10 Technical Specifications ... 92

A Grid Codes ... 96

B Resetting a Password ... 111

C Crimping an OT or DT Terminal ... 112

D Baud Rate Negotiation ... 115

E Contact Information ... 117

F Digital Power Customer Service ... 119

G Acronyms and Abbreviations ... 120

 Copyright © Huawei Technologies Co., Ltd.

1 Safety Information

Statement

Before transporting, storing, installing, operating, using, and/or maintaining the equipment, read this document, strictly follow the instructions provided herein, and follow all the safety instructions on the equipment and in this document. In this document, "equipment" refers to the products, software, components, spare parts, and/or services related to this document; "the Company" refers to the manufacturer (producer), seller, and/or service provider of the equipment; "you" refers to the entity that transports, stores, installs, operates, uses, and/or maintains the equipment.

The **Danger**, **Warning**, **Caution**, and **Notice** statements described in this document do not cover all the safety precautions. You also need to comply with relevant international, national, or regional standards and industry practices. **The Company shall not be liable for any consequences that may arise due to violations of safety requirements or safety standards concerning the design, production, and usage of the equipment.**

The equipment shall be used in an environment that meets the design specifications. Otherwise, the equipment may be faulty, malfunctioning, or damaged, which is not covered under the warranty. The Company shall not be liable for any property loss, personal injury, or even death caused thereby.

Comply with applicable laws, regulations, standards, and specifications during transportation, storage, installation, operation, use, and maintenance.

Do not perform reverse engineering, decompilation, disassembly, adaptation, implantation, or other derivative operations on the equipment software. Do not study the internal implementation logic of the equipment, obtain the source code of the equipment software, violate intellectual property rights, or disclose any of the performance test results of the equipment software.

The Company shall not be liable for any of the following circumstances or their consequences:

- The equipment is damaged due to force majeure such as earthquakes, floods, volcanic eruptions, debris flows, lightning strikes, fires, wars, armed conflicts, typhoons, hurricanes, tornadoes, and other extreme weather conditions.
- The equipment is operated beyond the conditions specified in this document.

 Copyright © Huawei Technologies Co., Ltd.

- The equipment is installed or used in environments that do not comply with international, national, or regional standards.
- The equipment is installed or used by unqualified personnel.
- You fail to follow the operation instructions and safety precautions on the product and in the document.
- You remove or modify the product or modify the software code without authorization.
- You or a third party authorized by you cause the equipment damage during transportation.
- The equipment is damaged due to storage conditions that do not meet the requirements specified in the product document.
- You fail to prepare materials and tools that comply with local laws, regulations, and related standards.
- The equipment is damaged due to your or a third party's negligence, intentional breach, gross negligence, or improper operations, or other reasons not related to the Company.

1.1 Personal Safety

DANGER

Ensure that power is off during installation. Do not install or remove a cable with power on. Transient contact between the core of the cable and the conductor will generate electric arcs or sparks, which may cause a fire or personal injury.

DANGER

Non-standard and improper operations on the energized equipment may cause fire, electric shocks, or explosion, resulting in property damage, personal injury, or even death.

DANGER

Before operations, remove conductive objects such as watches, bracelets, bangles, rings, and necklaces to prevent electric shocks.

DANGER

During operations, use dedicated insulated tools to prevent electric shocks or short circuits. The dielectric withstanding voltage level must comply with local laws, regulations, standards, and specifications.

 Copyright © Huawei Technologies Co., Ltd.

WARNING

During operations, wear personal protective equipment such as protective clothing, insulated shoes, goggles, safety helmets, and insulated gloves.

Figure 1-1 Personal protective equipment

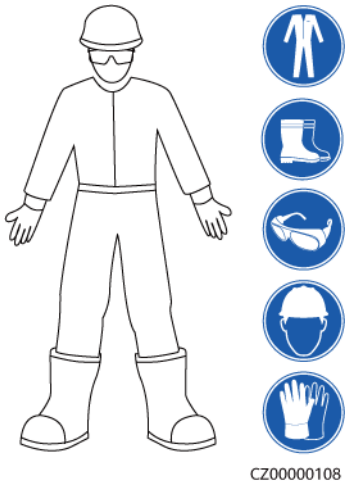

General Requirements

- Do not stop protective devices. Pay attention to the warnings, cautions, and related precautionary measures in this document and on the equipment.
- If there is a likelihood of personal injury or equipment damage during operations, immediately stop, report the case to the supervisor, and take feasible protective measures.
- Do not power on the equipment before it is installed or confirmed by professionals.
- Do not touch the power supply equipment directly or with conductors such as damp objects. Before touching any conductor surface or terminal, measure the voltage at the contact point to ensure that there is no risk of electric shock.
- Do not touch operating equipment because the enclosure is hot.
- Do not touch a running fan with your hands, components, screws, tools, or boards. Otherwise, personal injury or equipment damage may occur.
- In the case of a fire, immediately leave the building or the equipment area and activate the fire alarm or call emergency services. Do not enter the affected building or equipment area under any circumstances.

Personnel Requirements

- Only professionals and trained personnel are allowed to operate the equipment.
  - Professionals: personnel who are familiar with the working principles and structure of the equipment, trained or experienced in equipment operations and are clear of the sources and degree of various potential hazards in equipment installation, operation, maintenance

 Copyright © Huawei Technologies Co., Ltd.

  - Trained personnel: personnel who are trained in technology and safety, have required experience, are aware of possible hazards on themselves in certain operations, and are able to take protective measures to minimize the hazards on themselves and other people
- Personnel who plan to install or maintain the equipment must receive adequate training, be able to correctly perform all operations, and understand all necessary safety precautions and local relevant standards.
- Only qualified professionals or trained personnel are allowed to install, operate, and maintain the equipment.
- Only qualified professionals are allowed to remove safety facilities and inspect the equipment.
- Personnel who will perform special tasks such as electrical operations, working at heights, and operations of special equipment must possess the required local qualifications.
- Only authorized professionals are allowed to replace the equipment or components (including software).
- Only personnel who need to work on the equipment are allowed to access the equipment.

1.2 Electrical Safety

DANGER

Before connecting cables, ensure that the equipment is intact. Otherwise, electric shocks or fire may occur.

DANGER

Non-standard and improper operations may result in fire or electric shocks.

DANGER

Prevent foreign matter from entering the equipment during operations. Otherwise, equipment short-circuits or damage, load power derating, power failure, or personal injury may occur.

WARNING

For the equipment that needs to be grounded, install the ground cable first when installing the equipment and remove the ground cable last when removing the equipment.

 Copyright © Huawei Technologies Co., Ltd.

WARNING

During the installation of PV strings and the inverter, the positive or negative terminals of PV strings may be short-circuited to ground if the power cables are not properly installed or routed. In this case, an AC or DC short circuit may occur and damage the inverter. The resulting device damage is not covered under any warranty.

CAUTION

Do not route cables near the air intake or exhaust vents of the equipment.

General Requirements

- Follow the procedures described in the document for installation, operation, and maintenance. Do not reconstruct or alter the equipment, add components, or change the installation sequence without permission.
- Obtain approval from the national or local electric utility company before connecting the equipment to the grid.
- Observe the power plant safety regulations, such as the operation and work ticket mechanisms.
- Install temporary fences or warning ropes and hang "No Entry" signs around the operation area to keep unauthorized personnel away from the area.
- Before installing or removing power cables, turn off the switches of the equipment and its upstream and downstream switches.
- Before performing operations on the equipment, check that all tools meet the requirements and record the tools. After the operations are complete, collect all of the tools to prevent them from being left inside the equipment.
- Before installing power cables, check that cable labels are correct and cable terminals are insulated.
- When installing the equipment, use a torque tool of a proper measurement range to tighten the screws. When using a wrench to tighten the screws, ensure that the wrench does not tilt and the torque error does not exceed 10% of the specified value.
- Ensure that bolts are tightened with a torque tool and marked in red and blue after double-check. Installation personnel mark tightened bolts in blue. Quality inspection personnel confirm that the bolts are tightened and then mark them in red. (The marks must cross the edges of the bolts.)

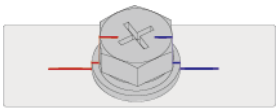

CZ0000112

- If the equipment has multiple inputs, disconnect all the inputs before operating the equipment.
- Before maintaining a downstream electrical or power distribution device, turn off the output switch on the power supply equipment.

 Copyright © Huawei Technologies Co., Ltd.

- During equipment maintenance, attach "Do not switch on" labels near the upstream and downstream switches or circuit breakers as well as warning signs to prevent accidental connection. The equipment can be powered on only after troubleshooting is complete.
- Do not open equipment panels.
- Check equipment connections periodically, ensuring that all screws are securely tightened.
- Only qualified professionals can replace a damaged cable.
- Do not scrawl, damage, or block any labels or nameplates on the equipment. Promptly replace labels that have worn out.
- Do not use solvents such as water, alcohol, or oil to clean electrical components inside or outside of the equipment.

Grounding

- Ensure that the grounding impedance of the equipment complies with local electrical standards.
- Ensure that the equipment is connected permanently to the protective ground. Before operating the equipment, check its electrical connection to ensure that it is reliably grounded.
- Do not work on the equipment in the absence of a properly installed ground conductor.
- Do not damage the ground conductor.

Cabling Requirements

- When selecting, installing, and routing cables, follow local safety regulations and rules.
- When routing power cables, ensure that there is no coiling or twisting. Do not join or weld power cables. If necessary, use a longer cable.
- Ensure that all cables are properly connected and insulated, and meet specifications.
- Ensure that the slots and holes for routing cables are free from sharp edges, and that the positions where cables are routed through pipes or cable holes are equipped with cushion materials to prevent the cables from being damaged by sharp edges or burrs.
- Ensure that cables of the same type are bound together neatly and straight and that the cable sheath is intact. When routing cables of different types, ensure that they are away from each other without entanglement and overlapping.
- Secure buried cables using cable supports and cable clips. Ensure that the cables in the backfill area are in close contact with the ground to prevent cable deformation or damage during backfilling.
- If the external conditions (such as the cable layout or ambient temperature) change, verify the cable usage in accordance with the IEC-60364-5-52 or local laws and regulations. For example, check that the current-carrying capacity meets requirements.
- When routing cables, reserve at least 30 mm clearance between the cables and heat-generating components or areas. This prevents deterioration or damage to the cable insulation layer.

 Copyright © Huawei Technologies Co., Ltd.

1.3 Environment Requirements

DANGER

Do not expose the equipment to flammable or explosive gas or smoke. Do not perform any operation on the equipment in such environments.

DANGER

Do not store any flammable or explosive materials in the equipment area.

DANGER

Do not place the equipment near heat sources or fire sources, such as smoke, candles, heaters, or other heating devices. Overheat may damage the equipment or cause a fire.

WARNING

Install the equipment in an area far away from liquids. Do not install it under areas prone to condensation, such as under water pipes and air exhaust vents, or areas prone to water leakage, such as air conditioner vents, ventilation vents, or feeder windows of the equipment room. Ensure that no liquid enters the equipment to prevent faults or short circuits.

WARNING

To prevent damage or fire due to high temperature, ensure that the ventilation vents or heat dissipation systems are not obstructed or covered by other objects while the equipment is running.

General Requirements

- Store the equipment according to the storage requirements. Equipment damage caused by unqualified storage conditions is not covered under the warranty.
- Keep the installation and operating environments of the equipment within the allowed ranges. Otherwise, its performance and safety will be compromised.
- The operating temperature range provided in the equipment's technical specifications refers to the ambient temperatures in equipment's installation environment.

 Copyright © Huawei Technologies Co., Ltd.

- Do not install, use, or operate outdoor equipment and cables (including but not limited to moving equipment, operating equipment and cables, inserting connectors to or removing connectors from signal ports connected to outdoor facilities, working at heights, performing outdoor installation, and opening doors) in harsh weather conditions such as lightning, rain, snow, and level 6 or stronger wind.
- Do not install the equipment in an environment with dust, smoke, volatile or corrosive gases, infrared and other radiations, organic solvents, or salty air.
- Do not install the equipment in an environment with conductive metal or magnetic dust.
- Do not install the equipment in an area conducive to the growth of microorganisms such as fungus or mildew.
- Do not install the equipment in an area with strong vibration, noise, or electromagnetic interference. The equipment shall be installed in an environment with a magnetic field strength less than 4 Gauss. If the magnetic field strength is greater than or equal to 4 Gauss, the equipment may fail to work properly. If the magnetic field strength is high, for example, in a smeltery, you are advised to use a gauss meter to measure the magnetic field strength of the equipment installation position when the smelting equipment is running normally.
- Ensure that the site complies with local laws, regulations, and related standards.
- Ensure that the ground in the installation environment is solid, free from spongy or soft soil, and not prone to subsidence. The site must not be located in a low-lying land prone to water or snow accumulation, and the horizontal level of the site must be above the highest water level of that area in history.
- Do not install the equipment in a position that may be submerged in water.
- If the equipment is installed in a place with abundant vegetation, in addition to routine weeding, harden the ground underneath the equipment using cement or gravel (the area shall be greater than or equal to 3 m x 2.5 m).
- Do not install the equipment outdoors in salt-affected areas because it may be corroded. A salt-affected area refers to the region within 500 m of the coast or prone to sea breeze. Regions prone to sea breeze vary with weather conditions (such as typhoons and monsoons) or terrains (such as dams and hills).
- Before opening doors during the installation, operation, and maintenance of the equipment, clean up any water, ice, snow, or other foreign objects on the top of the equipment to prevent foreign objects from falling into the equipment.
- When installing the equipment, ensure that the installation surface is solid enough to bear the weight of the equipment.
- After installing the equipment, remove the packing materials such as cartons, foam, plastics, and cable ties from the equipment area.

 Copyright © Huawei Technologies Co., Ltd.

1.4 Mechanical Safety

WARNING

Ensure that all necessary tools are ready and inspected by a professional organization. Do not use tools that have signs of scratches or fail to pass the inspection or whose inspection validity period has expired. Ensure that the tools are secure and not overloaded.

WARNING

Do not drill holes into the equipment. Doing so may affect the sealing performance and electromagnetic containment of the equipment and damage components or cables inside. Metal shavings from drilling may short-circuit boards inside the equipment.

General Requirements

- Repaint any paint scratches caused during equipment transportation or installation in a timely manner. Equipment with scratches must not be exposed for an extended period of time.
- Do not perform operations such as arc welding and cutting on the equipment without evaluation by the Company.
- Do not install other devices on the top of the equipment without evaluation by the Company.
- When performing operations over the top of the equipment, take measures to protect the equipment against damage.
- Use correct tools and operate them in the correct way.

Moving Heavy Objects

- Be cautious to prevent injury when moving heavy objects.

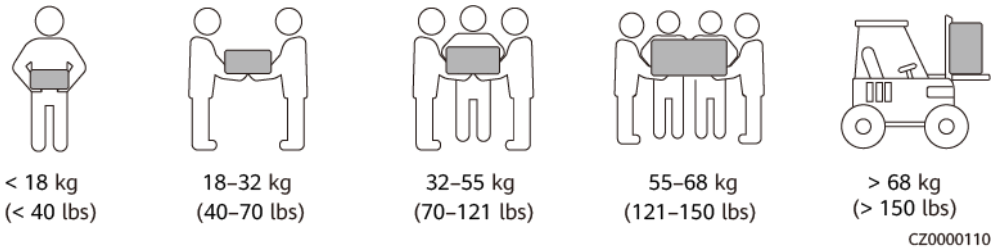

- If multiple persons need to move a heavy object together, determine the manpower and work division with consideration of height and other conditions to ensure that the weight is equally distributed.
- If two persons or more move a heavy object together, ensure that the object is lifted and landed simultaneously and moved at a uniform pace under the supervision of one person.

 Copyright © Huawei Technologies Co., Ltd.

- Wear personal protective gears such as protective gloves and shoes when manually moving the equipment.
- To move an object by hand, approach to the object, squat down, and then lift the object gently and stably by the force of the legs instead of your back. Do not lift it suddenly or turn your body around.
- Do not quickly lift a heavy object above your waist. Place the object on a workbench that is half-waist high or any other appropriate place, adjust the positions of your palms, and then lift it.
- Move a heavy object stably with balanced force at an even and low speed. Put down the object stably and slowly to prevent any collision or drop from scratching the surface of the equipment or damaging the components and cables.
- When moving a heavy object, be aware of the workbench, slope, staircase, and slippery places. When moving a heavy object through a door, ensure that the door is wide enough to move the object and avoid bumping or injury.
- When transferring a heavy object, move your feet instead of turning your waist around. When lifting and transferring a heavy object, ensure that your feet point to the target direction of movement.
- When transporting the equipment using a pallet truck or forklift, ensure that the tynes are properly positioned so that the equipment does not topple. Before moving the equipment, secure it to the pallet truck or forklift using ropes. When moving the equipment, assign dedicated personnel to take care of it.
- Choose sea, roads in good conditions, or airplanes for transportation. Do not transport the equipment by railway. Avoid tilt or jolt during transportation.

Using Ladders

- Use wooden or insulated ladders when you need to perform live-line working at heights.
- Platform ladders with protective rails are preferred. Single ladders are not recommended.
- Before using a ladder, check that it is intact and confirm its load bearing capacity. Do not overload it.
- Ensure that the ladder is securely positioned and held firm.

CZ00000107

- When climbing up the ladder, keep your body stable and your center of gravity between the side rails, and do not overreach to the sides.

- When a step ladder is used, ensure that the pull ropes are secured.
- If a single ladder is used, the recommended angle for the ladder against the floor is 75 degrees, as shown in the following figure. A square can be used to measure the angle.

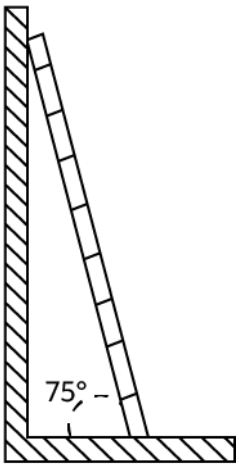

PI02SC0008

- If a single ladder is used, ensure that the wider end of the ladder is at the bottom, and take protective measures to prevent the ladder from sliding.
- If a single ladder is used, do not climb higher than the fourth rung of the ladder from the top.
- If you use a single ladder to climb up to a platform, ensure that the ladder is at least 1 m higher than the platform.

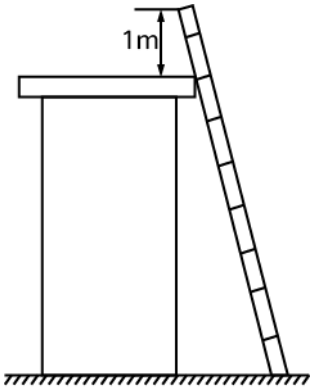

PI02SC0009

Hoisting

- Only trained and qualified personnel are allowed to perform hoisting operations.
- Install temporary warning signs or fences to isolate the hoisting area.
- Ensure that the foundation where hoisting is performed on meets the load-bearing requirements.
- Before hoisting objects, ensure that hoisting tools are firmly secured onto a fixed object or wall that meets the load-bearing requirements.
- During hoisting, do not stand or walk under the crane or the hoisted objects.
- Do not drag steel ropes and hoisting tools or bump the hoisted objects against hard objects during hoisting.

 Copyright © Huawei Technologies Co., Ltd.

- Ensure that the angle between two hoisting ropes is no more than 90 degrees, as shown in the following figure.

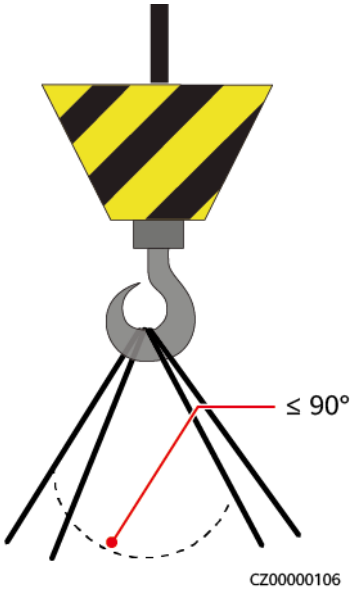

Drilling Holes

- Obtain consent from the customer and contractor before drilling holes.
- Wear protective equipment such as safety goggles and protective gloves when drilling holes.
- To avoid short circuits or other risks, do not drill holes into buried pipes or cables.
- When drilling holes, protect the equipment from shavings. After drilling, clean up any shavings.

 Copyright © Huawei Technologies Co., Ltd.

2 Overview

The SUN2000 is a three-phase grid-tied PV string inverter that converts the DC power generated by PV strings into AC power and feeds the power into the power grid.

2.1 Model

This document involves the following product models:

- SUN2000-150K-MG0-ZH
- SUN2000-150K-MG0

Figure 2-1 Model number

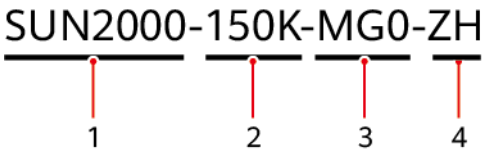

Table 2-1 Model description

No.	Meaning	Description
1	Product family identifier	SUN2000: grid-tied solar inverter
2	Power level identifier	150K: a rated power of 150 kW
3	Product series identifier	MG0: product series with an input voltage level of 1100 V DC
4	Region identifier	ZH: China

2.2 Networking Application

 Copyright © Huawei Technologies Co., Ltd.

2.2.1 Typical Networking

- All the SUN2000 models support RS485 communication, but only certain models support AC MBUS communication.
- The SUN2000 does not support the access of optimizers.

NOTE

In the networking diagrams, — indicates the power cable, → indicates the power flow direction, and ∧∧∧ and — indicate the signal flow.

RS485 Networking

NOTICE

- A maximum of 30 SUN2000s can be cascaded to each COM port on the SmartLogger, and a maximum of 10 SUN2000s can be cascaded to the Dongle.
- The RS485 communication distance between the SUN2000 at the end and the SmartLogger must be less than or equal to 1000 m.

Figure 2-2 RS485 networking application (SmartLogger)

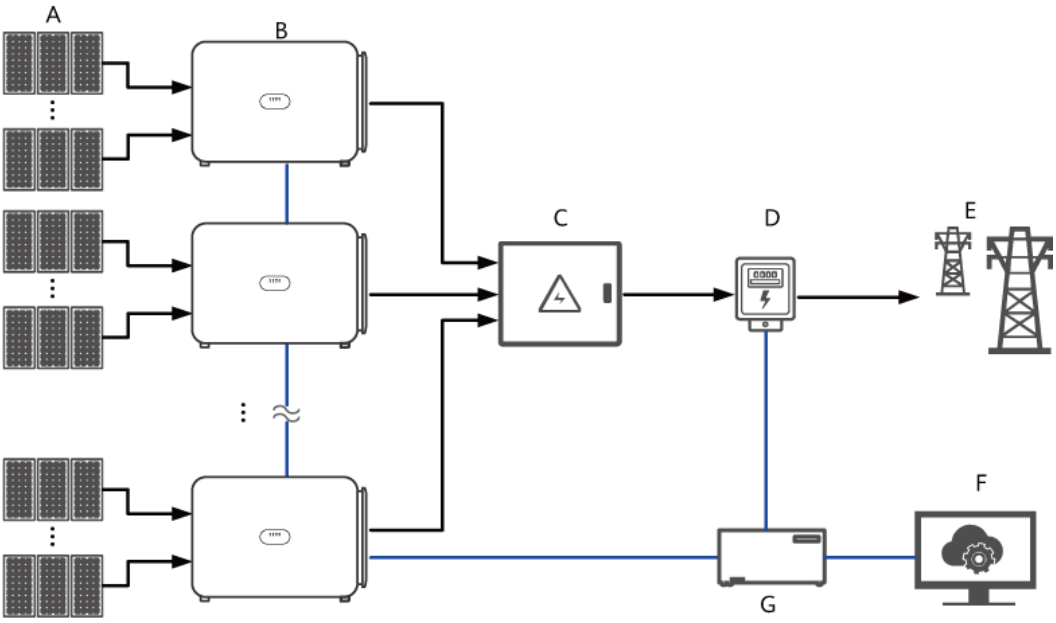

(A) PV strings	(B) SUN2000s	(C) AC combiner box
(D) Power meter	(E) Power grid	(F) Management system
(G) SmartLogger	-	-

Figure 2-3 RS485 networking application (Dongle)

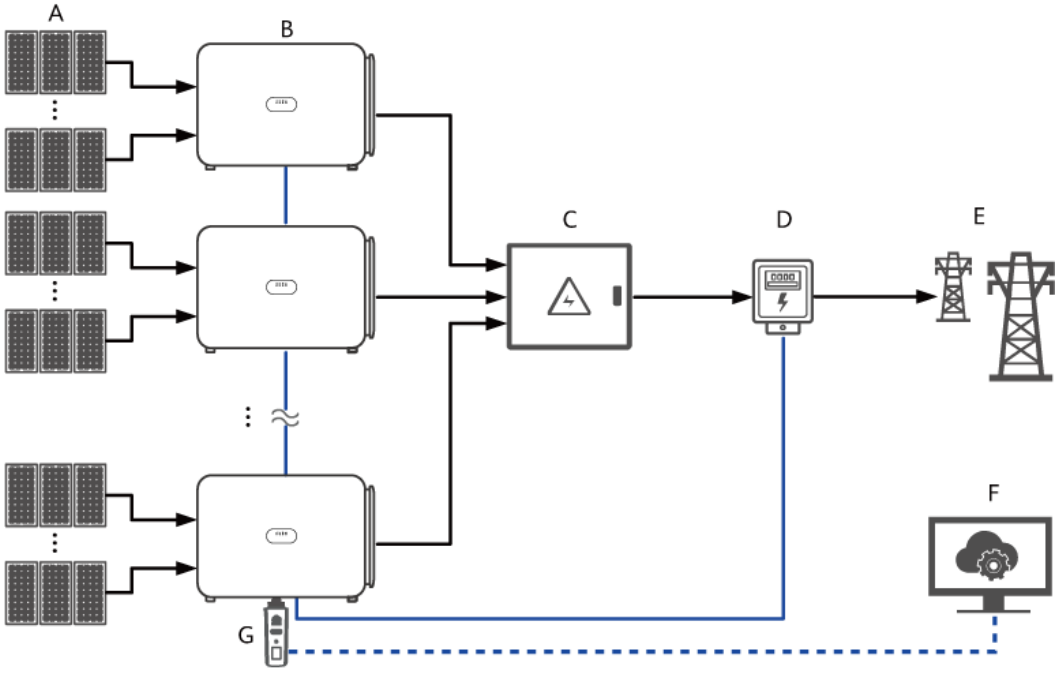

(A) PV strings	(B) SUN2000s	(C) AC combiner box
(D) Power meter	(E) Power grid	(F) Management system
(G) Dongle	-	-

MBUS Networking

NOTICE

- A maximum of 80 SUN2000s can be cascaded to the SmartLogger, and a maximum of 10 SUN2000s can be cascaded to the Dongle.
- If MBUS is used for communication, you are advised to use multi-core cables with the maximum communication distance of 1000 m. To use other types of AC power cables, contact local technical support.

 Copyright © Huawei Technologies Co., Ltd.

Figure 2-4 MBUS networking application (SmartLogger)

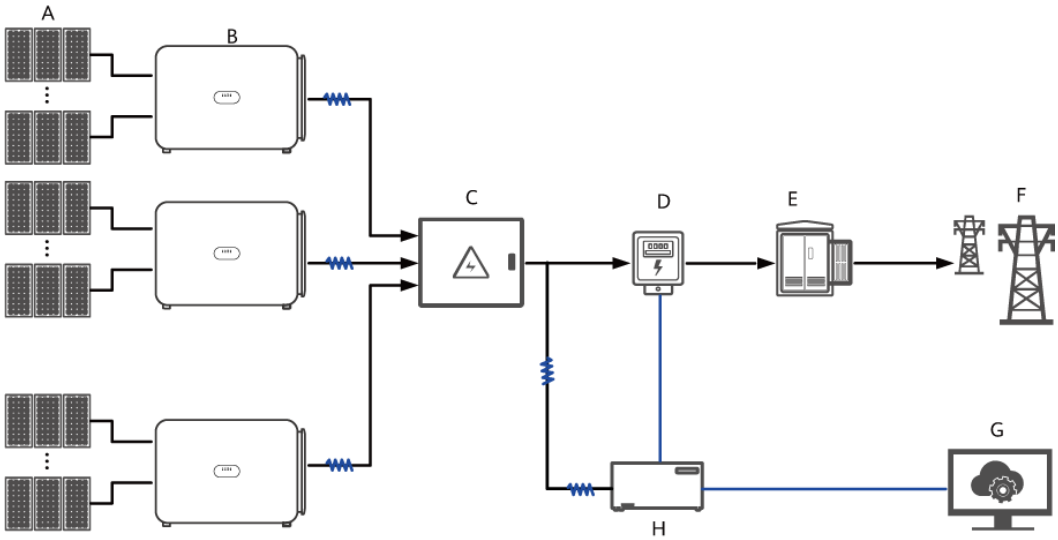

(A) PV strings	(B) SUN2000s	(C) AC combiner box
(D) Power meter	(E) Isolation transformer	(F) Power grid
(G) Management system	(H) SmartLogger	-

Figure 2-5 MBUS networking application (Dongle)

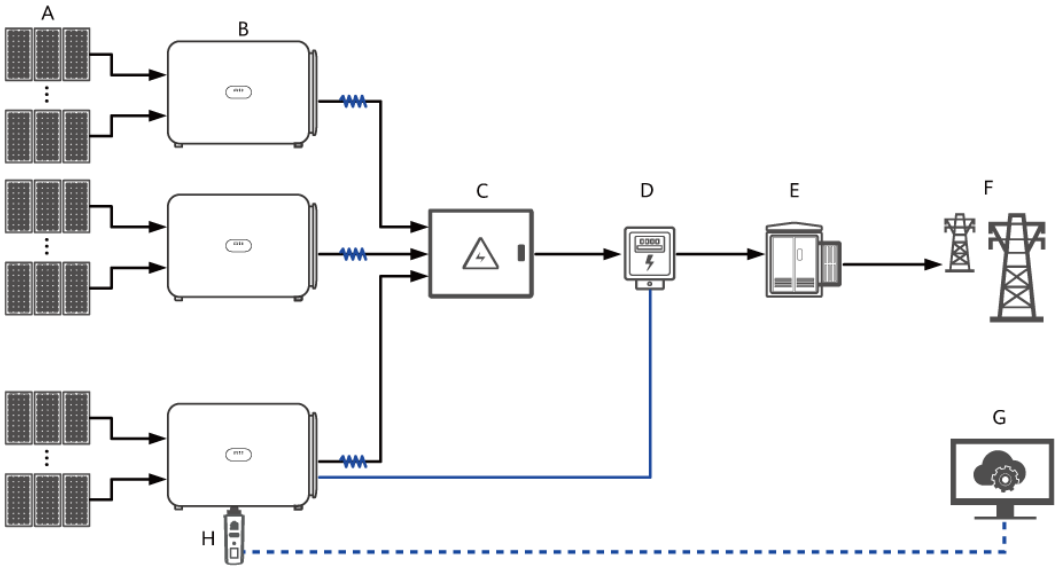

(A) PV strings	(B) SUN2000s	(C) AC combiner box
(D) Power meter	(E) Isolation transformer	(F) Power grid
(G) Management system	(H) Dongle	-

2.2.2 Earthing Systems

Earthing Systems

The SUN2000 supports the TN-S, TN-C, TN-C-S, TT, and IT earthing systems.

Figure 2-6 Earthing systems

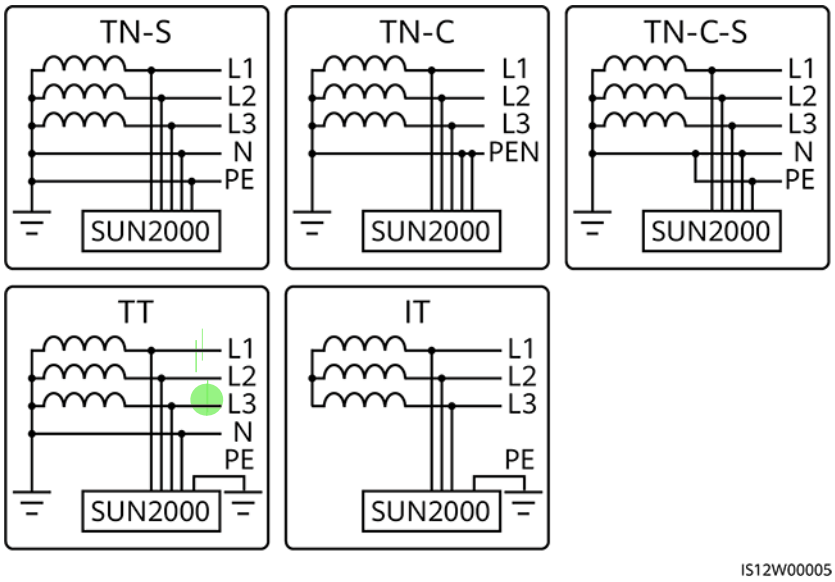

2.3 Appearance

Appearance and Ports

Figure 2-7 Appearance

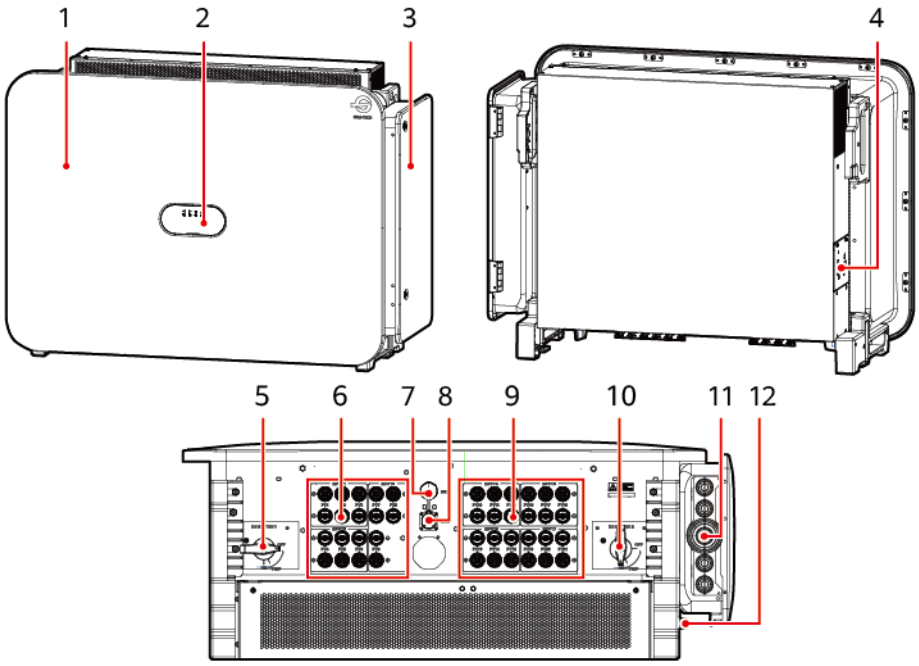

(1) Panel

(2) LED indicators

(3) Maintenance compartment door

(4) Fan tray

(5) DC SWITCH 1

(6) DC input terminal group 1 (PV1–PV9, controlled by DC SWITCH 1)

 Copyright © Huawei Technologies Co., Ltd.

(7) USB port	(8) RS485 communication port (COM)
(9) DC input terminal group 2 (PV10–PV21, controlled by DC SWITCH 2)	(10) DC SWITCH 2
(11) AC output cable hole	(12) Ground point

Indicator Description

Indicator	Status (Blinking Fast: On for 0.2s and Off for 0.2s; Blinking Slowly: On for 1s and Off for 1s)	Meaning
PV connection indicator	Steady green	At least one PV string is properly connected, and the DC input voltage of the corresponding MPPT circuit is at least 200 V.
	Blinking green fast	If the alarm/maintenance indicator is red, an environmental fault at the DC side of the inverter was generated.
	Off	The inverter is disconnected from all PV strings, or the DC input voltage of all MPPT circuits is less than 200 V.
	Steady red	If the alarm/maintenance indicator is red, an internal fault on the DC side of the inverter is generated.
Grid connection indicator	Steady green	The inverter is in grid-tied mode.
	Blinking green fast	If the alarm/maintenance indicator is red, an environmental fault on the AC side of the inverter was generated.
	Off	The inverter is not in grid-tied mode.
	Steady red	If the alarm/maintenance indicator is red, an internal fault on the AC side of the inverter was generated.
Communication indicator	Blinking green fast	The inverter receives communication data normally.
	Off	The inverter has not received communication data for 10 seconds.

 Copyright © Huawei Technologies Co., Ltd.

Indicator	Status (Blinking Fast: On for 0.2s and Off for 0.2s; Blinking Slowly: On for 1s and Off for 1s)		Meaning
Alarm/ Maintenance indicator	Alarm	Steady red	A major alarm was generated. ● If the PV connection indicator or grid connection indicator is blinking green fast, rectify DC or AC environmental faults as instructed by the SUN2000 app. ● If neither the PV connection indicator nor the grid connection indicator is blinking green fast, replace components or the inverter as instructed by the SUN2000 app.
		Blinking red fast	A minor alarm was generated.
		Blinking red slowly	A warning alarm was generated.
	Local maintenance	Steady green	The local maintenance is successful.
		Blinking green fast	The local maintenance failed.
		Blinking green slowly	The device is under local maintenance or shut down after receiving a command.

NOTE

- The PV connection indicator and the grid connection indicator preferentially indicate environmental faults.
- Local maintenance refers to operations performed after a USB flash drive, WLAN module, or USB data cable is inserted into the USB port of the inverter. For example, import and export data using a USB flash drive, or connect to the app using a WLAN module or USB data cable.
- If the alarming and the local maintenance happen concurrently, the alarm/maintenance indicator shows the local maintenance state first. After the USB flash drive, WLAN module, or USB data cable is removed, the indicator shows the alarm state.

 Copyright © Huawei Technologies Co., Ltd.

DC SWITCH

DANGER

- If both DC switches are automatically turned off at the same time, the AC switch does not trip, and the indicators on the inverter display the following status, do not turn on the DC switches by yourself. Contact your vendor or technical support.
  1. LED1, LED2, and LED4 are steady red.
  2. LED1 and LED4 are steady red.
- If both DC switches are automatically turned off at the same time, the AC switch does not trip, and the LED4 indicator on the inverter is steady red, do not turn on the DC switches by yourself. Perform operations according to the handling suggestions for alarm ID 2001.
- If all DC switches are automatically turned off at the same time and the AC switch trips, check that no short circuit occurs on the AC side between phases or between a phase and the ground, turn on the AC switch, export logs, and send the logs to your vendor or technical support. Rectify the fault after your vendor or technical support provides a solution. If there is any short circuit on the AC side between phases or between a phase and the ground, do not turn on the AC switch. Contact your vendor or technical support.
- Before turning on a switch, ensure that all alarms have been cleared.
- If the DC switches are automatically turned off and the inverter generates a **String Reverse Connection** or **String Current Backfeed** alarm, rectify the fault based on the alarm handling suggestions. After the fault is rectified, wait for at least 3 minutes, turn the switch handle to **OFF** to complete the reset, and then turn it on. For details, see **Resetting and Turning On the DC SWITCH**.

Table 2-2 DC SWITCH description

Switch	Description	
DC SWITCH	**ON**	The DC SWITCH is on and can be turned off for protection.
	TRIP	The DC SWITCH is automatically turned off. (The switch handle is between **ON** and **OFF**.)
	OFF	The DC SWITCH is off.

 Copyright © Huawei Technologies Co., Ltd.

Figure 2-8 DC SWITCH

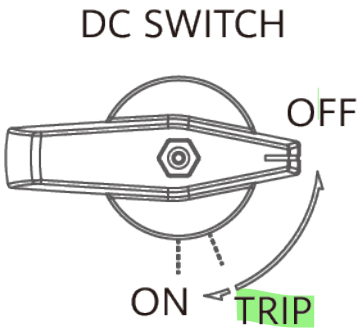

2.4 Circuit Diagram

The SUN2000 receives inputs from 21 PV strings. The inputs are grouped into 7 MPPT circuits inside the SUN2000 to track the maximum power point of the PV strings. The DC power is converted into three-phase AC power through an inverter circuit. Surge protection is supported on both the DC and AC sides.

Figure 2-9 Circuit diagram

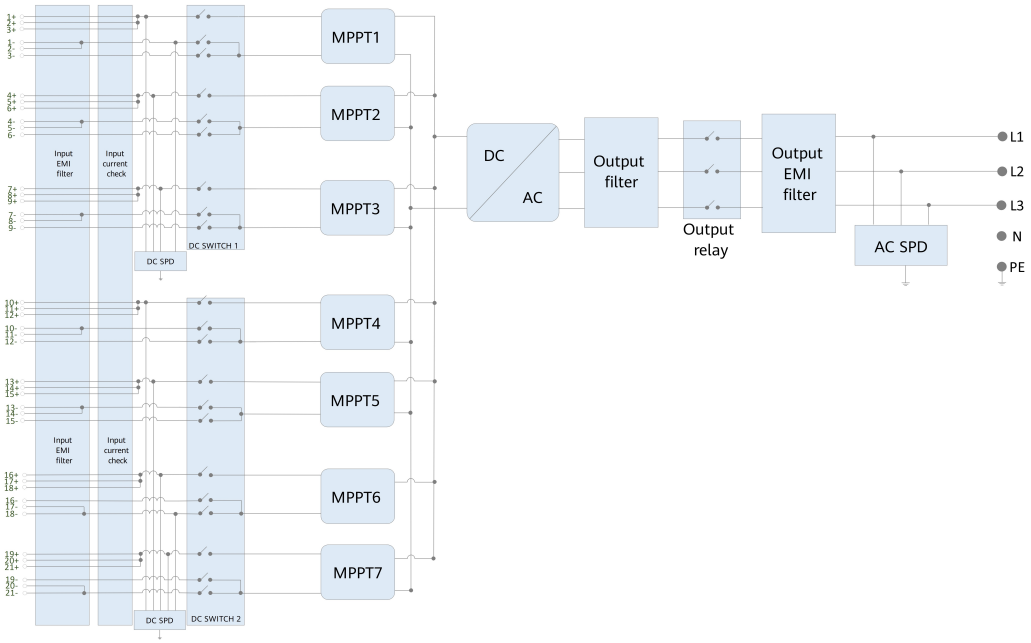

2.5 Working Modes

The SUN2000 can work in Standby, Operating, or Shutdown mode.

 Copyright © Huawei Technologies Co., Ltd.

Figure 2-10 Working modes

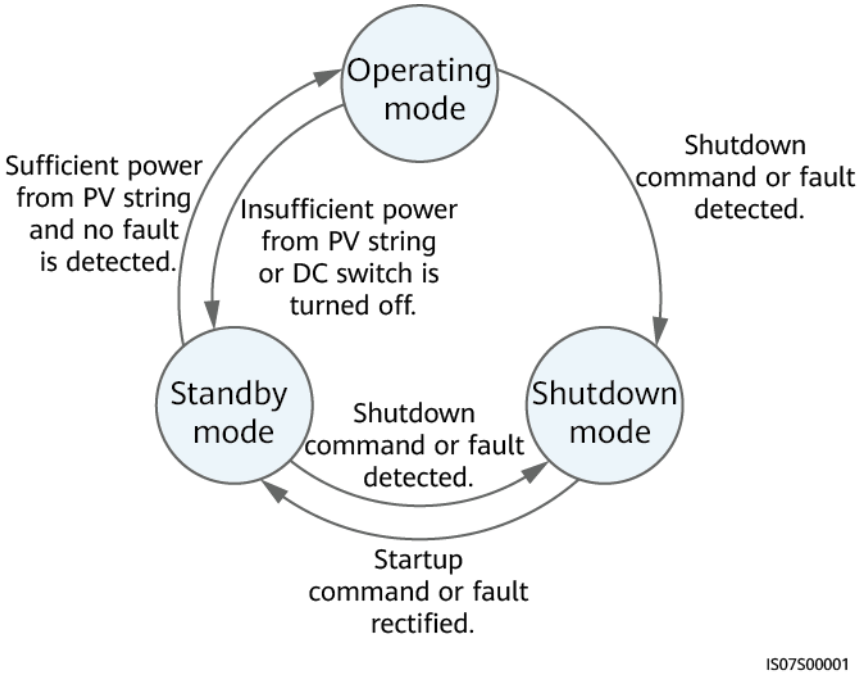

Table 2-3 Working mode description

Working Mode	Description
Standby	The SUN2000 enters Standby mode when the external environment does not meet the operating requirements. In Standby mode: ● The SUN2000 continuously performs status check and enters the Operating mode once the operating requirements are met. ● The SUN2000 enters Shutdown mode after detecting a shutdown command or a fault after startup.
Operating	In Operating mode: ● The SUN2000 converts DC power from PV strings into AC power and feeds the power to the power grid. ● The SUN2000 tracks the maximum power point to maximize the PV string output. ● If the SUN2000 detects a fault or a shutdown command, it enters the Shutdown mode. ● The SUN2000 enters Standby mode after detecting that the PV string output power is not suitable for connecting to the power grid for generating power.
Shutdown	● In Standby or Operating mode, the SUN2000 enters Shutdown mode after detecting a fault or shutdown command. ● In Shutdown mode, the SUN2000 enters Standby mode after detecting a startup command or that the fault is rectified.

 Copyright © Huawei Technologies Co., Ltd.

2.6 Label Description

Symbol	Name	Meaning
	Large current warning	Potential hazards exist after the inverter is powered on. Take protective measures when operating the inverter. Before powering on the inverter, ensure that the inverter is grounded because there is a large contact current after the inverter is powered on.
	High temperature hazard	Do not touch the inverter when it is running because its enclosure is hot.
	Electric shock hazard	Hazardous voltages exist when the inverter is working. Take protective measures during operations and maintenance.
	Delayed discharge	• High voltage exists after the inverter is powered on. Only qualified and trained electrical technicians are allowed to perform operations on the inverter. • Residual voltage exists after the inverter is powered off. It takes 15 minutes for the inverter to discharge to the safe voltage.
	Referring to documentation	Reminds operators to refer to the documentation for the device. Losses caused by operations that do not comply with the requirements of site selection, storage, or mounting specified in the user manual are not covered under the warranty.
	Protective earthing	Indicates the position for connecting the protective earthing (PE) cable.
	Operation warning	Do not remove the DC input connector when the inverter is running.

 Copyright © Huawei Technologies Co., Ltd.

Symbol	Name	Meaning
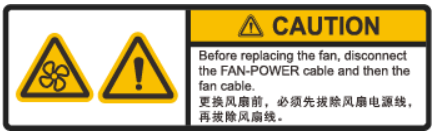	Fan operation warning	The power connector of the fan must be disconnected before fan replacement.
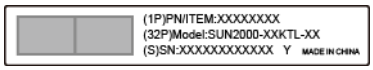	Inverter SN label	Indicates the inverter serial number.
	Device weight	The inverter needs to be carried by four persons or using a forklift.
	DC SWITCH operation label	After the DC SWITCH is automatically turned off, do not turn it on. Perform operations according to the alarm information and user manual.

2.7 Smart I-V Curve Diagnosis

The SUN2000 supports the Smart I-V Curve Diagnosis. For details, see **iMaster NetEco V600R023C00 Smart I-V Curve Diagnosis User Manual**.

 Copyright © Huawei Technologies Co., Ltd.

3 Storage Requirements

NOTICE

- Store the device according to the storage requirements. Device damage caused by unqualified storage conditions is not covered under the warranty.
- Do not store the device without outer packaging.
- Do not tilt a packing case or place it upside down.

The following requirements shall be met if inverters are not put into use immediately:

- Do not remove the outer packaging. Check the packaging regularly (recommended: once every three months). Replace any packaging that is damaged during storage.
- If an inverter is unpacked but will not be used immediately, put it back to the original packaging with the desiccant, and seal it with tape.
- Inverters must be stored in a clean and dry environment with appropriate temperature and humidity. The air must not contain corrosive or flammable gases.

Figure 3-1 Storage temperature and humidity

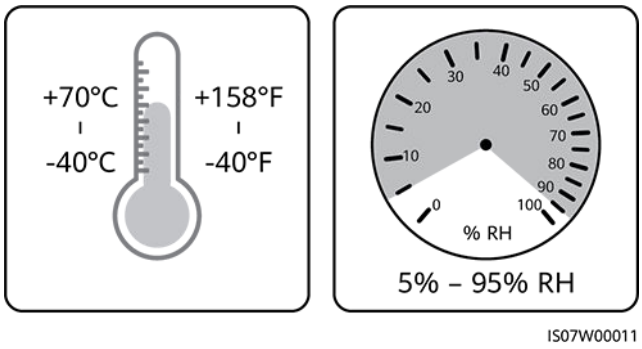

- When temporarily storing inverters outdoors, do not stack them on a pallet. Take rainproof measures such as using tarpaulins to protect inverters from rain and water.
- Do not tilt a packing case or place it upside down.

 Copyright © Huawei Technologies Co., Ltd.

- To avoid personal injury or device damage, stack inverters with caution to prevent them from falling over.

Figure 3-2 Maximum number of stacking layers

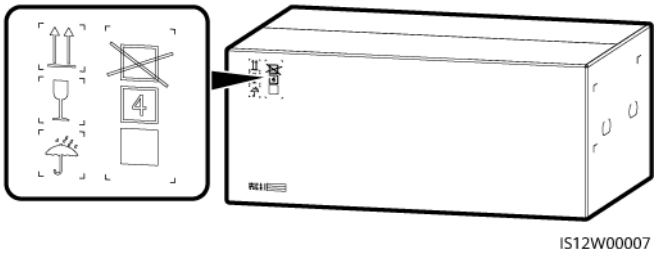

- Do not store inverters for more than two years. If inverters have been stored for two years or longer, they must be checked and tested by professionals before being put into use.
- If an inverter has not been running for six months or longer after being mounted, it may have failed and must be checked and tested by professionals before being put into operation.

4 Installation

4.1 Installation Modes

The inverter can be mounted on a wall, support, or pole clamp.

Table 4-1 Installation modes

Installation Mode	Screw Specifications	Description
Wall mounting	M12x60 stainless steel expansion anchor bolt	Prepared by the customer
Support mounting	M12x40 bolt assembly	Delivered with the mounting bracket. If the length does not meet the installation requirements, the customer shall prepare M12 bolt assemblies and install them together with the M12 nuts delivered with the product.
Pole-clamp mounting	Depending on the pole clamp	Prepared by the customer

4.2 Installation Requirements

 Copyright © Huawei Technologies Co., Ltd.

4.2.1 Site Selection Requirements

Installation Environment Requirements

- Do not install the inverter in working or living areas to avoid personal injury or property loss caused by accidental contact by non-professionals or other reasons during device operation.
- Do not install the inverter in noise-sensitive areas (such as residential areas, office areas, and schools) to avoid complaints. If the preceding areas are unavoidable, the distance between the installation position and noise-sensitive areas must be greater than 40 m. Alternatively, use other low-noise models.
- If the device is installed in public places (such as parking lots, stations, and factories) other than working and living areas, install a protective net outside the device and set up a safety warning sign to isolate the device. This is to avoid personal injury or property loss caused by accidental contact by non-professionals or other reasons during device operation.
- If the equipment is installed in a place with abundant vegetation, in addition to routine weeding, harden the ground underneath the equipment using cement or gravel (the area shall be greater than or equal to 3 m x 2.5 m).
- Do not install the equipment in an area with strong vibration, noise, or electromagnetic interference. The equipment shall be installed in an environment with a magnetic field strength less than 4 Gauss. If the magnetic field strength is greater than or equal to 4 Gauss, the equipment may fail to work properly. If the magnetic field strength is high, for example, in a smeltery, you are advised to use a gauss meter to measure the magnetic field strength of the equipment installation position when the smelting equipment is running normally.
- Do not install the inverter in areas containing flammable materials (such as sulfur, phosphorus, liquefied petroleum gas, marsh gas, flour, and cotton) to avoid personal injury or property loss caused by fire or other reasons.
- Do not install the inverter in areas containing explosives (such as blasting agents, display shells, fireworks, and firecrackers) to avoid personal injury or property loss caused by explosion or other reasons.
- Do not install the inverter in areas with corrosive substances (such as sulfuric acid, hydrochloric acid, nitric acid, hydrogen sulfide, and chlorine) to avoid inverter failure caused by corrosion, which is not covered under the warranty.
- Do not install the device where its enclosure and heat sink are easily accessible, because the voltage is high and these parts are hot during operation.
- The inverter provides self-protection in high-temperature environments. Its energy yield may decrease as the ambient temperature increases. Ensure that the following installation requirements are met:
  - Install the device in a well-ventilated environment to ensure good heat dissipation.
  - If the device is installed in an enclosed environment, the heat dissipation equipment or ventilation equipment shall be installed. The indoor ambient temperature must not be higher than the outdoor ambient temperature.

 Copyright © Huawei Technologies Co., Ltd.

  - You are advised to install the device in a sheltered place or install an awning over it to avoid direct sunlight.
  - Reserve sufficient clearance around the inverter for installation and heat dissipation.
- The inverter will become corroded if installed in areas exposed to salt. Before installing the inverter outdoors in such areas, consult with the Company. A salt-affected area refers to a region within 500 m of the coast or prone to sea breeze. Regions prone to sea breeze vary with weather conditions (such as typhoons and monsoons) or terrains (such as dams and hills).

NOTE

The device shall be physically isolated from third-party wireless communications facilities and residential environments at a distance greater than 30 m.

Mounting Structure Requirements

- The mounting structure for the inverter must be fireproof. Do not install the inverter on flammable building materials to avoid personal injury or property loss caused by fire or other reasons.
- Ensure that the installation surface is solid enough to bear the weight of the device. to avoid personal injury or property loss caused by the collapse of the mounting structure or other reasons.
- In residential areas, do not install the device on plaster board walls or walls made of similar materials with a weak sound insulation performance because the noise generated by the device may interfere with residents.

Figure 4-1 Mounting structure

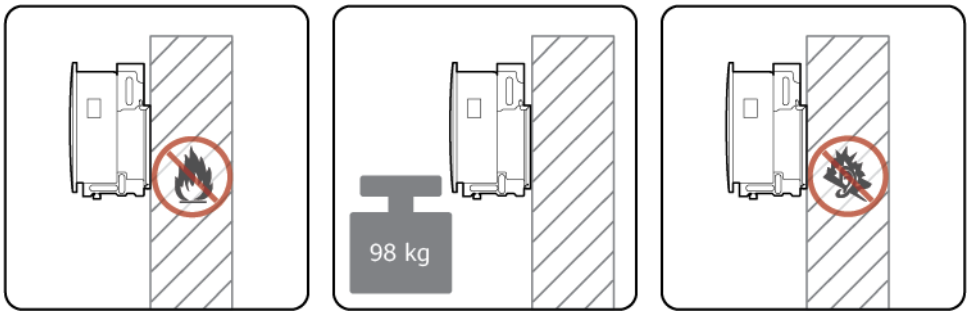

4.2.2 Clearance Requirements

Dimensions

Figure 4-2 Dimensions

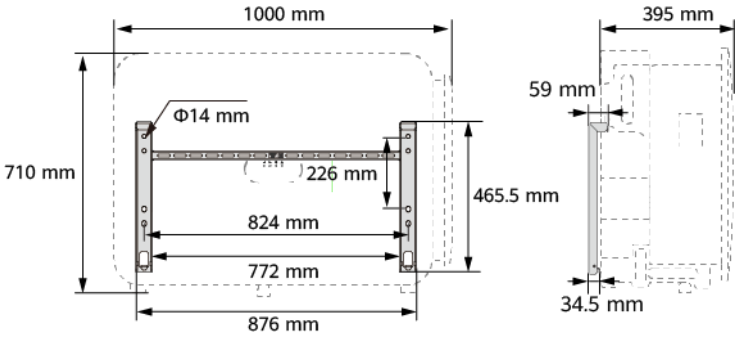

Installation Clearance Requirements

Reserve sufficient clearance around the SUN2000 for installation and heat dissipation.

Figure 4-3 Clearance

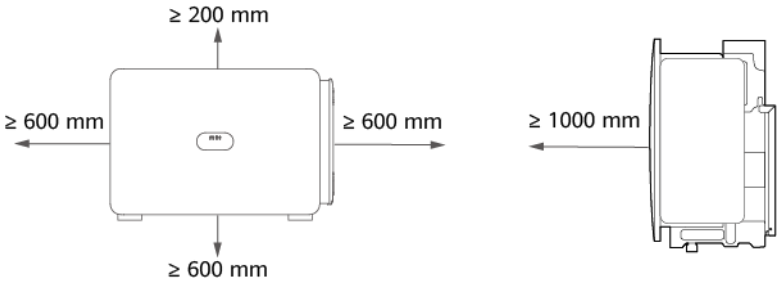

NOTE

For ease of the SUN2000 installation on the mounting bracket, cable connecting at the bottom, and future maintenance, it is recommended that the clearance from the bottom be between 600 mm and 730 mm. For further questions regarding clearance, consult local technical support engineers.

When installing multiple SUN2000s, install them in horizontal mode if sufficient space is available and install them in triangle mode if no sufficient space is available. Stacked installation is not recommended.

Figure 4-4 Horizontal installation mode (recommended)

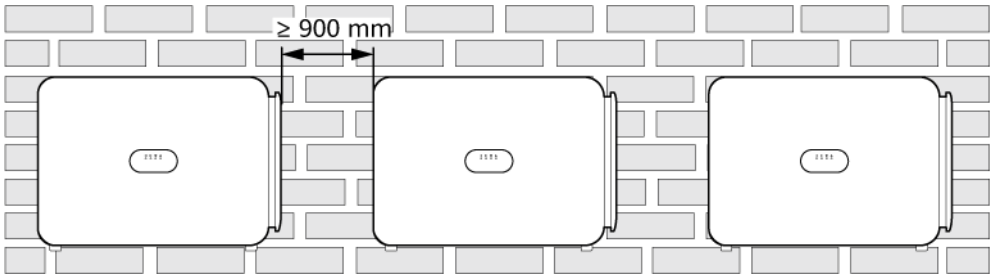

Figure 4-5 Triangle installation mode (recommended)

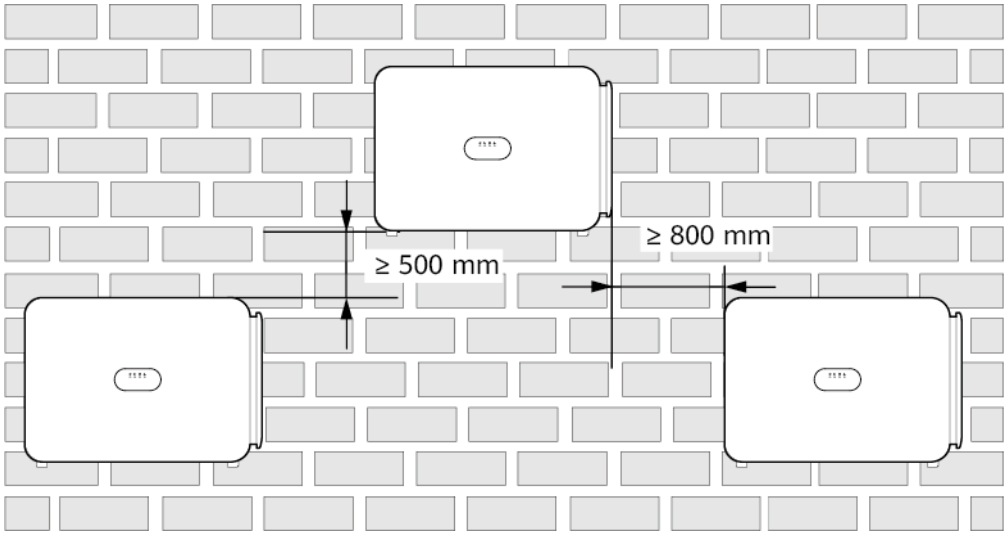

Figure 4-6 Back-to-back installation mode (recommended)

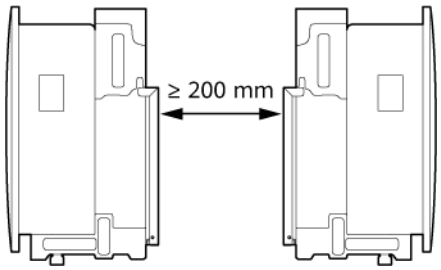

Figure 4-7 Stacked installation mode (not recommended)

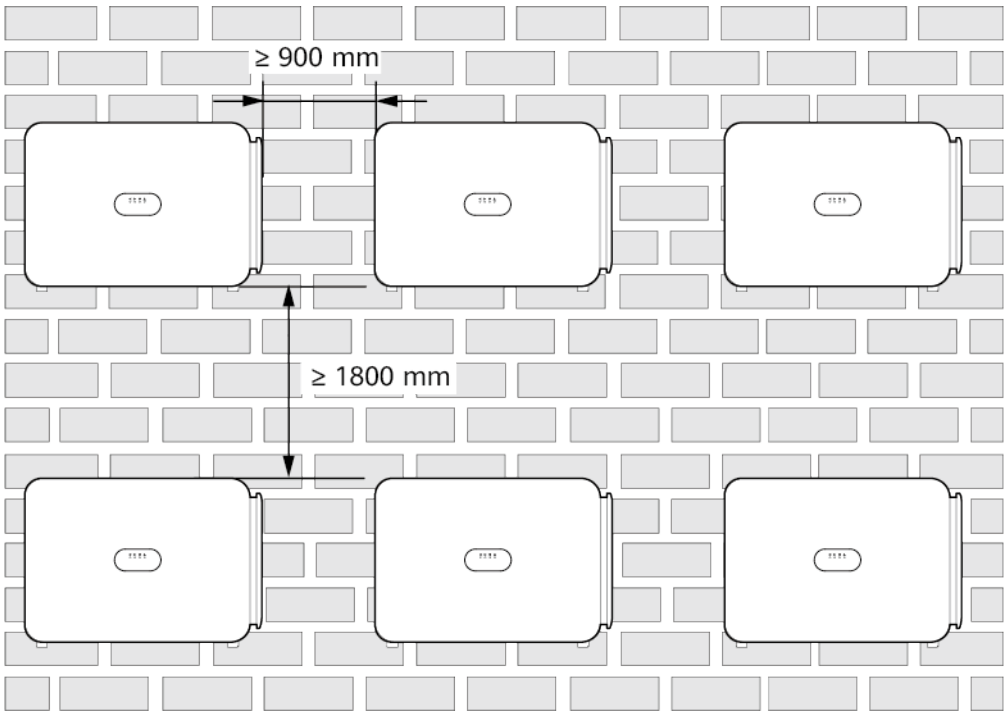

4.2.3 Angle Requirements

The inverter can be support-mounted or wall-mounted. The installation angle requirements are as follows:

- Install the inverter vertically or at a maximum back tilt of 75 degrees to facilitate heat dissipation.
- Do not install the inverter at forward tilted, excessive back tilted, side tilted, horizontal, or upside down positions.

Figure 4-8 Installation angle

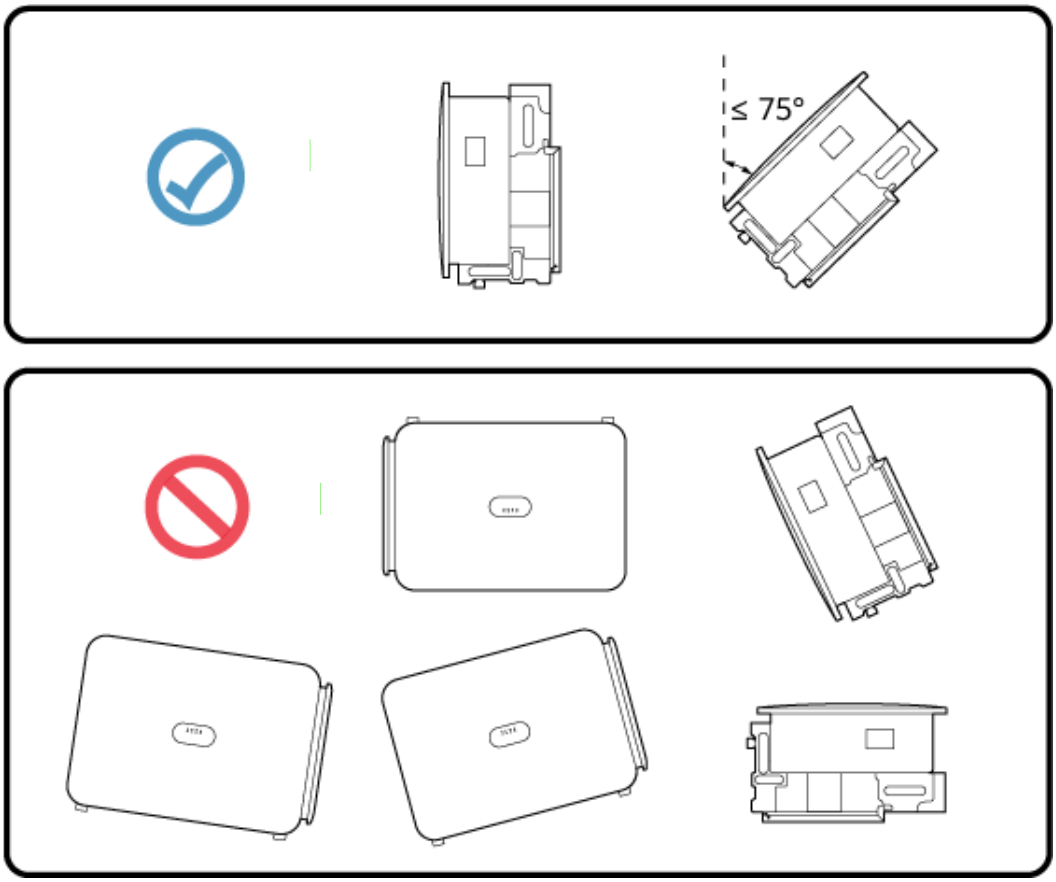

4.3 Preparing Tools

Category	Tool			
Installation	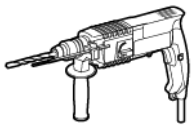 Hammer drill	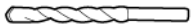 Drill bit (Φ14 mm and Φ16 mm)	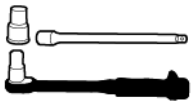 Insulated torque socket wrench (including an extension bar ≥ 50 mm)	Phillips insulated torque screwdriver
	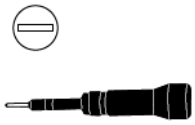 Flat-head insulated torque screwdriver	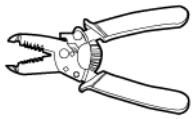 Wire stripper	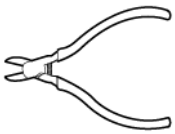 Diagonal pliers	Rubber mallet
	Utility knife	Cable cutter	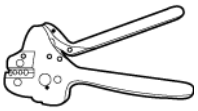 Crimping tool H4STC0001 (AMPHENOL) or CT75A-FJB10 (AVIC JONHON)	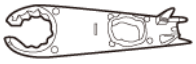 Spanner H4TW0001 (AMPHENOL) or CT75A-FJB7 (AVIC JONHON)
	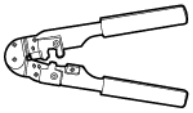 RJ45 crimping tool	Vacuum cleaner	Multimeter (DC voltage measurement range ≥ 1100 V DC)	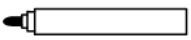 Marker

Category	Tool			
	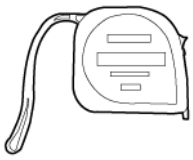 Steel measuring tape	Level	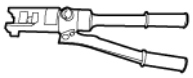 Hydraulic pliers	Heat shrink tubing
	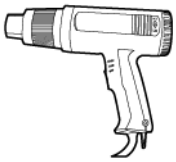 Heat gun	Cable tie	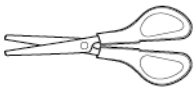 Scissors	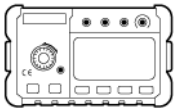 Insulation resistance tester (output voltage > 1500 V)
Personal protective equipment (PPE)	Insulated gloves	Goggles	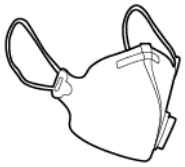 Dust mask	Insulated shoes
	Safety helmet	Reflective vest	Protective gloves	-

4.4 Checking Before Installation

Outer Packing Materials

Before unpacking the inverter, check the outer packing materials for damage, such as holes and cracks, and check the inverter model. If any damage is found or the inverter model is not what you requested, do not unpack the package and contact your supplier as soon as possible.

NOTE

You are advised to remove the packing materials within 24 hours before installing the inverter.

 Copyright © Huawei Technologies Co., Ltd.

Package Contents

NOTICE

- After placing the equipment in the installation position, unpack it with care to prevent scratches. Keep the equipment stable during unpacking.

After unpacking the inverter, check that the contents are intact and complete. If any damage is found or any component is missing, contact your supplier.

NOTE

For details about the number of contents, see the *Packing List* in the packing case.

4.5 Moving the Inverter

Procedure

Step 1 Take the inverter out of the packing case and move it to the installation position.

NOTICE

- After placing the equipment in the installation position, unpack it with care to prevent scratches. Keep the equipment stable during unpacking.
- Handles are packed in a fitting bag and are not delivered with the inverter.
- Secure the lifting handles (with the steel washers of the lifting handles closely fitted to the inverter).
- If the stud of a lifting handle is bent, replace the lifting handle in time.
- Four persons or appropriate transportation tools are required to move the inverter.
- Do not use the ports or wiring terminals at the bottom to support any weight of the inverter.
- When you need to temporally place the inverter on the ground, use foam, cardboard, or other protection material to prevent damage to its enclosure.
- To avoid damage to the inverter, do not lift or hoist it with an improper hold as shown in **Figure 4-10**.

 Copyright © Huawei Technologies Co., Ltd.

Figure 4-9 Taking out, moving, or mounting the inverter

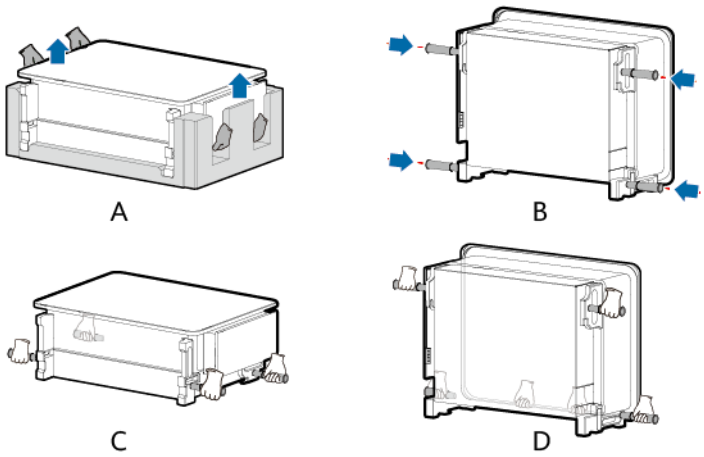

(A) Taking out the inverter (B) Installing the lifting handles (C) Moving the inverter (D) Mounting the inverter

Figure 4-10 Lifting positions

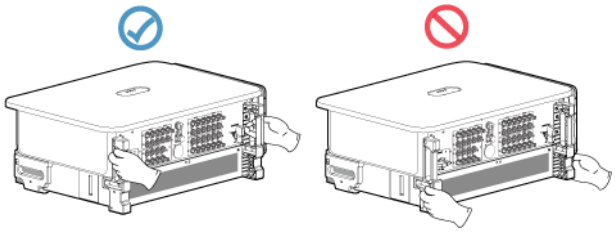

NOTE

If the installation position is high, you can hoist the inverter.

Figure 4-11 Hoisting

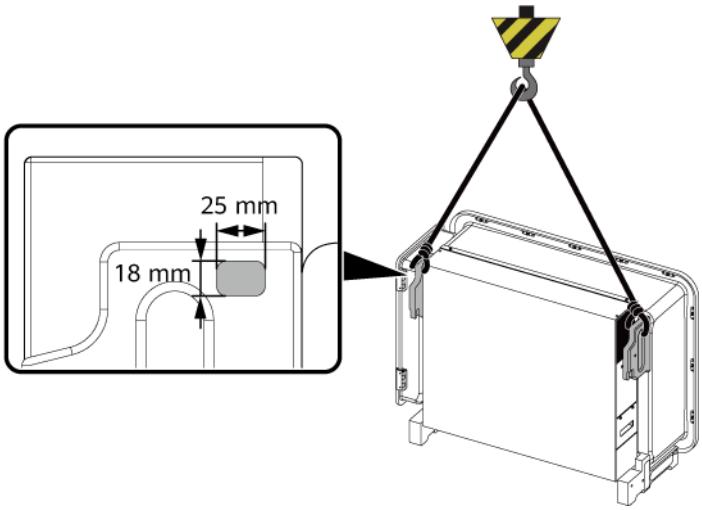

----End

4.6 Installing the Inverter on a Support

Procedure

Step 1 Remove the torx key and store it properly.

Figure 4-12 Removing the torx key

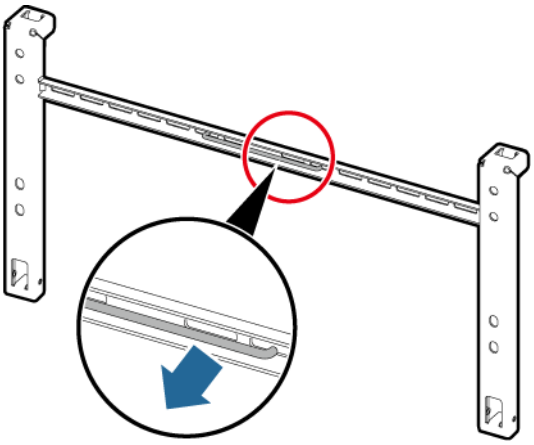

Step 2 Secure the mounting bracket.

NOTE

- The mounting bracket of the inverter has four groups of tapped holes, each group containing four tapped holes. Mark any hole in each group based on site requirements and mark four holes in total. The two round holes are recommended.
- M12x40 bolt assemblies are delivered with the inverter and bound to the mounting bracket. If the bolt length does not meet the installation requirements, prepare M12 bolt assemblies by yourself and use them together with the delivered M12 nuts.

Figure 4-13 Installing the mounting bracket

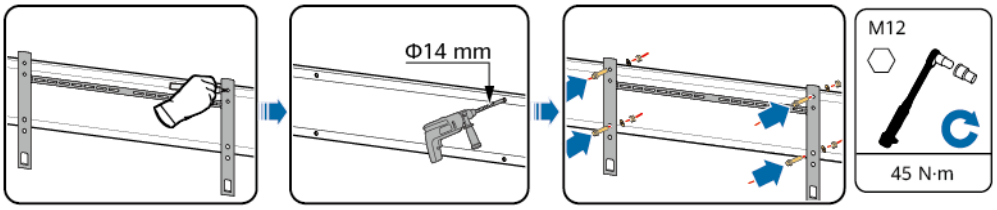

Step 3 Secure the inverter.

 Copyright © Huawei Technologies Co., Ltd.

Figure 4-14 Securing the inverter

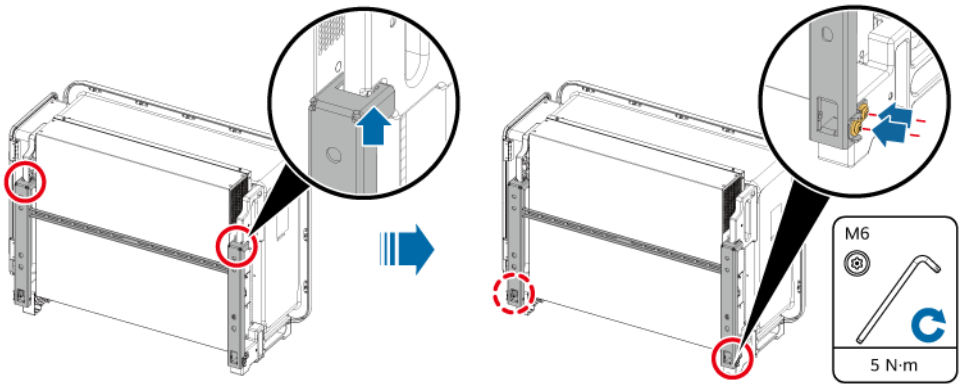

----End

4.7 Installing the Inverter on a Wall

Procedure

Step 1 Determine the hole positions and mark them using a marker.

Step 2 Secure the mounting bracket.

DANGER

Avoid drilling holes into the water pipes or power cables buried in the wall.

Figure 4-15 Expansion bolt structure

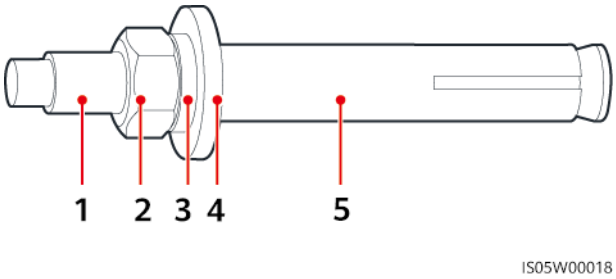

(1) Bolt (2) Nut (3) Spring washer

(4) Flat washer (5) Expansion sleeve

 Copyright © Huawei Technologies Co., Ltd.

NOTICE

- To prevent dust inhalation or contact with eyes, wear safety goggles and a dust mask when drilling holes.
- Use a vacuum cleaner to clean up dust in and around the holes, and measure the spacing. If the holes are inaccurately positioned, drill the holes again.
- Level the top of the expansion sleeve with the concrete wall after removing the nut, spring washer, and flat washer. Otherwise, the mounting bracket will not be securely installed on the concrete wall.

Figure 4-16 Installing an expansion bolt

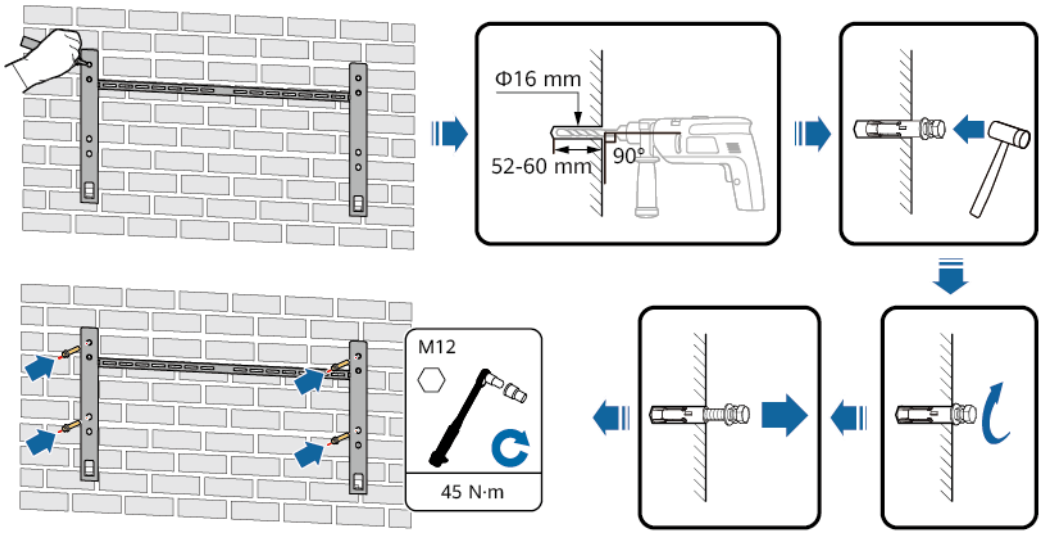

Step 3 Secure the inverter.

Figure 4-17 Securing the inverter

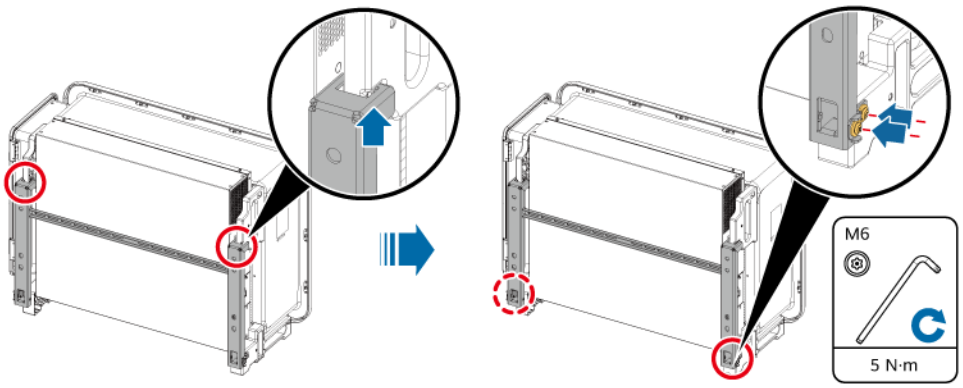

----End

4.8 Installing the SUN2000 on a Pole Clamp

Figure 4-18 Pole-clamp installation

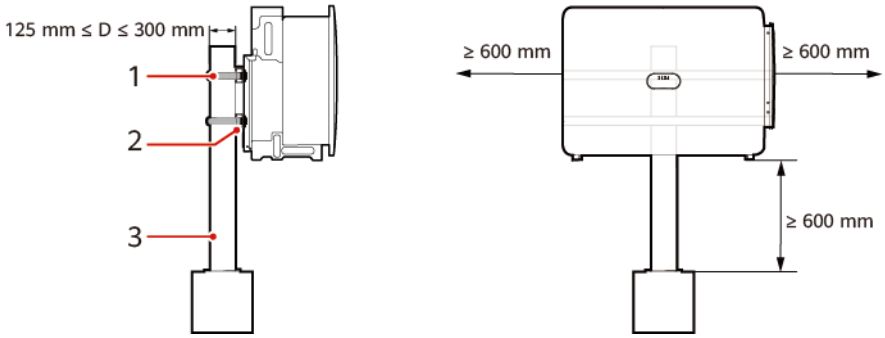

(1) Square bolt clamp (2) Inverter mounting beam (3) Vertical pole

5 Electrical Connections

5.1 Precautions

DANGER

- When exposed to sunlight, the PV arrays supply DC voltage to the inverter. Before connecting cables, ensure that each **DC SWITCH** on the inverter is set to **OFF**. Otherwise, the high voltage of the inverter may result in electric shocks.
- The site must be equipped with qualified fire fighting facilities, such as fire sand and carbon dioxide fire extinguishers.
- Wear personal protective equipment and use dedicated insulated tools to avoid electric shocks or short circuits.

WARNING

- The equipment damage caused by incorrect cable connections is beyond the warranty scope.
- Only certified electrician can perform electrical terminations.
- Operation personnel must wear PPE when connecting cables.
- Before connecting cables to ports, leave enough slack to reduce the tension on the cables and prevent poor cable connections.

CAUTION

- Stay away from the equipment when preparing cables to prevent cable scraps from entering the equipment. Cable scraps may cause sparks and result in personal injury and equipment damage.

 Copyright © Huawei Technologies Co., Ltd.

NOTE

The cable colors shown in the electrical connection diagrams provided in this section are for reference only. Select cables in accordance with local cable specifications (green-and-yellow cables are only used for protective earthing).

5.2 Preparing Cables

Figure 5-1 Cable connections (configure the components in the dotted box as required)

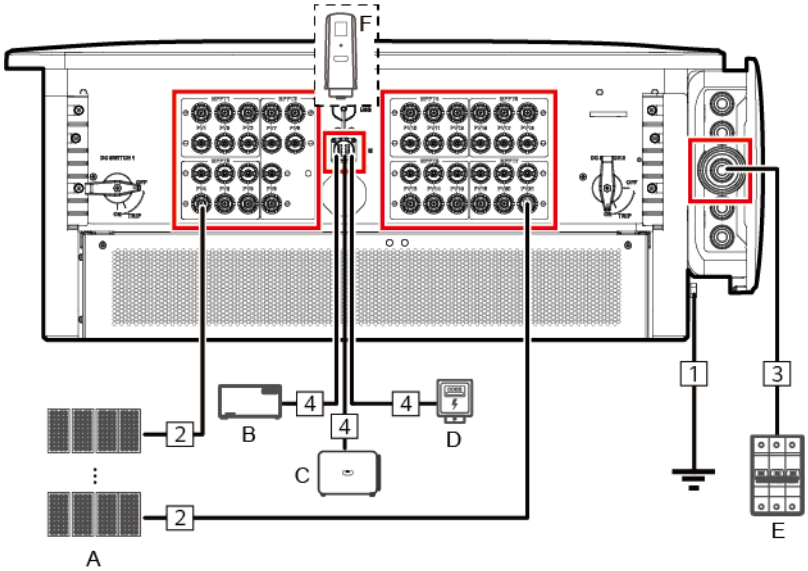

Table 5-1 Component description

No.	Component	Description	Source
A	PV string	• A PV string consists of PV modules connected in series. • The inverter supports 21 PV string inputs.	Prepared by the customer
B	SmartLogger	The SUN2000 communicates with the management system through the SmartLogger.	Purchased from the Company
C	SUN2000	Select a proper model as required.	Purchased from the Company
D	Power meter[1]	Implements power control at the grid connection point in low voltage scenarios using a power meter. Recommended power meter models: DTSU666-HW; YDS60-80	Prepared by the customer

No.	Component	Description	Source
E	AC switch	To ensure that the inverter can be safely disconnected from the power grid when an exception occurs, connect an AC switch to the AC side of the inverter. Select an appropriate AC switch in accordance with local industry standards and regulations. ● Installed in the AC combiner box ● Recommended: a three-phase AC circuit breaker with a rated voltage greater than or equal to 500 V AC and a rated current of 315 A	Prepared by the customer
F	Dongle	The SUN2000 communicates with the management system through the Dongle.	Purchased from the Company
Note [1]: For details about power meter operations, see **DTSU666-HW Smart Power Sensor Quick Guide** and **YDS60-80 Smart Power Sensor Quick Guide**.			

NOTICE

The inverter has an internal residual current monitoring unit (RCMU). Its external AC switch should be a three-phase circuit breaker or any other AC load circuit breaker to safely disconnect the inverter from the power grid.

NOTE

- Select cables in compliance with local cable standards.
- The factors that affect cable selection include the rated current, cable type, routing mode, ambient temperature, and maximum expected line loss.

Table 5-2 Cable description (S indicates the conductor cross-sectional area of the AC cable, and S_p indicates the conductor cross-sectional area of the PE cable)

No.	Cable	Type	Conductor Cross-Sectional Area	Outer Diameter	Source
1	PE cable[1]	Single-core outdoor copper cable and M10 OT/DT terminal	$S_p \geq S/2$	-	Prepared by the customer
2	DC input power cable	PV cable that meets the 1100 V standard	4–6 mm^2	5.5–9 mm	Prepared by the customer

No.	Cable	Type	Conductor Cross-Sectional Area	Outer Diameter	Source
3	AC output power cable (multi-core)	• If you connect a PE cable to the ground point on the enclosure and no neutral wire is used, you are advised to use a three-core (L1, L2, and L3) outdoor cable and M12 OT/DT terminals (L1, L2, and L3). • If you connect a PE cable to the ground point in the maintenance compartment and no neutral wire is used, you are advised to use a four-core (L1, L2, L3, and PE) outdoor cable, M12 OT/DT terminals (L1, L2, and L3), and M10 OT/DT terminals (PE). • If you connect a PE cable to the ground point on the enclosure and a neutral wire is used, you are advised to use a four-core (L1, L2, L3, and N) outdoor cable and M12 OT/DT terminals (L1, L2, L3, and N). • If you connect a PE cable to the ground point in the maintenance compartment and a neutral wire is used, you are advised to use a five-core (L1, L2, L3, N, and PE) outdoor cable, M12 OT/DT terminals (L1, L2, L3, and N), and M10 OT/DT terminals (PE).	• S: 95–240 mm^2 • $S_p \geq S/2$	24–66 mm	Prepared by the customer

 Copyright © Huawei Technologies Co., Ltd.

No.	Cable	Type	Conductor Cross-Sectional Area	Outer Diameter	Source
	AC output power cable (single-core)	(Recommended) Single-core outdoor cable and M12 OT/DT terminal	• S: 95–400 mm^2 • $S_p \geq S/2$	14–38 mm	Prepared by the customer
4	RS485 communications cable	Outdoor shielded twisted pair cable that meets the local standard	0.25–1 mm^2	• One or two communications cables: 4–11 mm • Three communications cables: 4–8 mm	Prepared by the customer
Note [1]: The S_p value is valid only if the conductors of the PE cable and AC output power cable use the same material. If the materials are different, ensure that the conductor cross-sectional area of the PE cable produces a conductance equivalent to that specified in this table. The specifications of the PE cable are subject to this table or calculated according to IEC 60364-5-54.					

5.3 Connecting a PE Cable

Precautions

DANGER

- Ensure that the PE cable is securely connected. Otherwise, electric shocks may occur.
- Do not connect the neutral wire to the enclosure as a PE cable. Otherwise, electric shocks may occur.

 Copyright © Huawei Technologies Co., Ltd.

NOTICE

- Proper grounding is helpful for resisting the impact of surge voltage and improving the electromagnetic interference (EMI) performance. Before connecting the AC power cable, DC power cables, and communications cable, connect the PE cable to the PE point.
- You are advised to connect the PE cable to the PE point on the enclosure. The PE point in the maintenance compartment is used for connecting to the PE wire of a multi-core AC power cable. If the cross-sectional area of the PE cable meets the requirements, select either PE point on the enclosure or in the maintenance compartment for connecting the PE cable.
- It is recommended that the inverter be connected to a nearby PE point. Connect the PE points of all inverters in the same array to ensure equipotential connections to PE cables.

Procedure

Step 1 Connect the PE cable to the PE point. To enhance the corrosion resistance of a PE terminal, apply silicone grease or paint on it after connecting the PE cable to the PE point on the enclosure.

Figure 5-2 Connecting a PE cable to the PE point (on the enclosure)

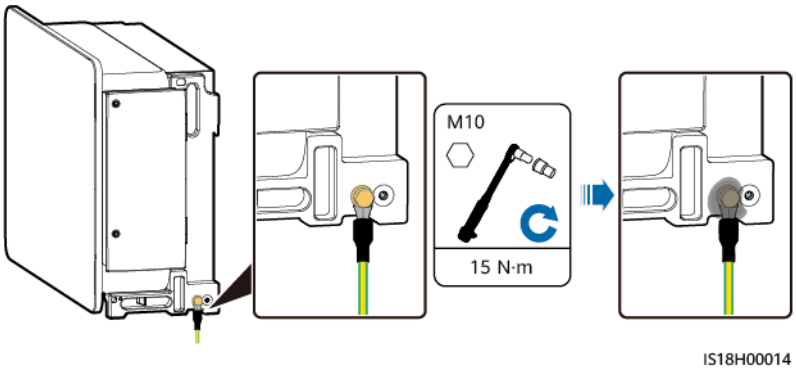

----End

5.4 Connecting an AC Output Power Cable

Precautions

- A three-phase AC switch should be installed on the AC side of the inverter. To ensure that the inverter can safely disconnect itself from the power grid when an exception occurs, select a proper overcurrent protection device in compliance with local power distribution regulations.
- The inverter is integrated with a comprehensive residual current detection unit to distinguish fault current from residual current. Upon detecting that the residual current exceeds the threshold, the inverter immediately disconnects from the power grid.

 Copyright © Huawei Technologies Co., Ltd.

WARNING

- Do not connect loads between an inverter and an AC switch that directly connects to the inverter. Otherwise, the switch may trip by mistake.
- If an AC switch is used with specifications beyond local standards, regulations, or the Company's recommendations, the switch may fail to turn off in a timely manner in case of exceptions, causing serious faults.
- Do not open the panel of the inverter.
- Before opening the maintenance compartment door, ensure that no electrical connections are made for the inverter on the AC or DC side.
- Do not open the maintenance compartment door on rainy or snowy days. If you need to, take protective measures to prevent rain or snow from entering the maintenance compartment. If protective measures cannot be taken, do not open the maintenance compartment door.
- Do not leave unused screws in the maintenance compartment.

CAUTION

Each inverter shall be equipped with an AC output switch. Multiple inverters shall not connect to the same AC switch.

CAUTION

Cables must be vertically routed into the maintenance compartment, PV terminals, and other wiring terminals to avoid damage caused by horizontal stress on the terminals, which is not covered under the warranty.

NOTICE

- The cable outer diameter can be measured using the ruler sticker in the maintenance compartment.
- Ensure that the cable jacket is in the maintenance compartment.
- If you remove too many parts of the rubber ring of a cable, making the cable hole diameter greater than the cable outer diameter, use firestop putty to seal the gap around the rubber ring of the cable.
- Ensure that the AC output power cables are connected securely. Otherwise, the inverter may fail to operate, or become overheated during operation due to an unreliable connection, which will damage the terminal block. The resulting device damage is not covered under any warranty.
- You are advised to connect the PE cable to the PE point on the enclosure. The PE point in the maintenance compartment is used for connecting to the PE wire of a multi-core AC power cable. If the cross-sectional area of the PE cable meets the requirements, select either PE point on the enclosure or in the maintenance compartment for connecting the PE cable.

 Copyright © Huawei Technologies Co., Ltd.

Table 5-3 Bending radius requirements for AC power cables

Picture	Single-core Cable		Multi-core Cable	
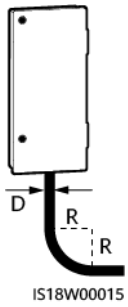	Unarmored	Armored	Unarmored	Armored
	R ≥ 20D	R ≥ 15D	R ≥ 15D	R ≥ 12D
	R indicates the bending radius, and D indicates the outer diameter of the cable. **NOTE** The AC power cable must be routed vertically into the maintenance compartment.			

Wiring Area

Figure 5-3 Wiring ports

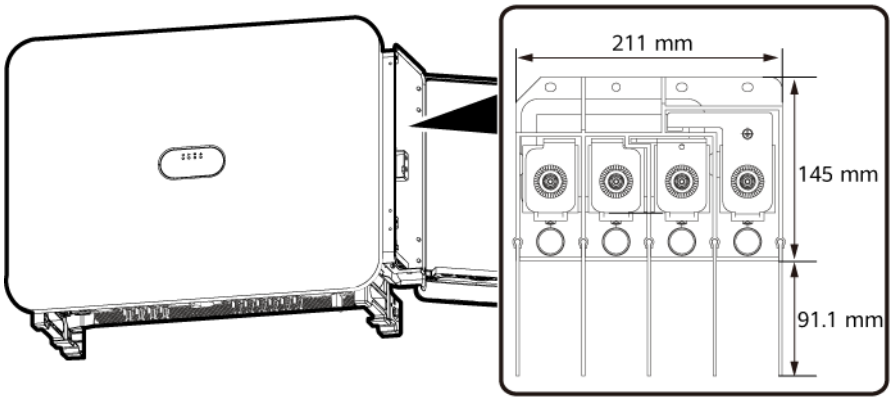

Procedure

Step 1 Open the maintenance compartment door and install the door stopper.

Figure 5-4 Opening a maintenance compartment door

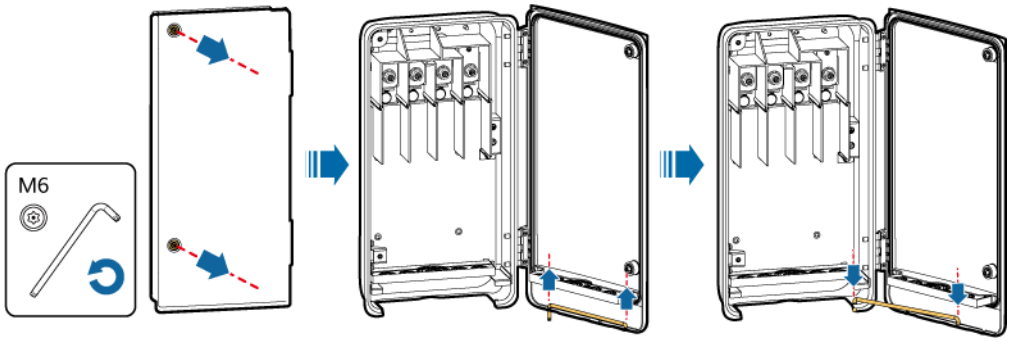

Step 2 Connect the AC output power cables based on the cable type.

Figure 5-5 Specifications of the crimped OT/DT terminal

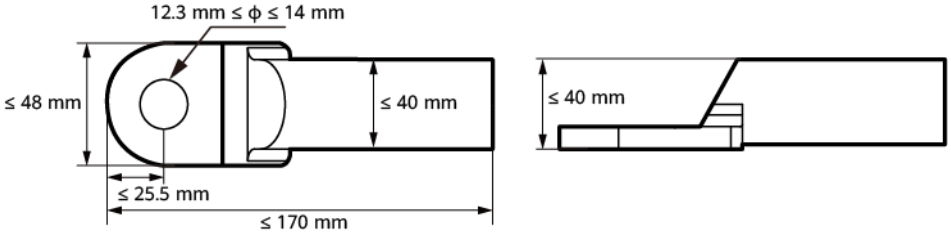

Figure 5-6 Cable connection

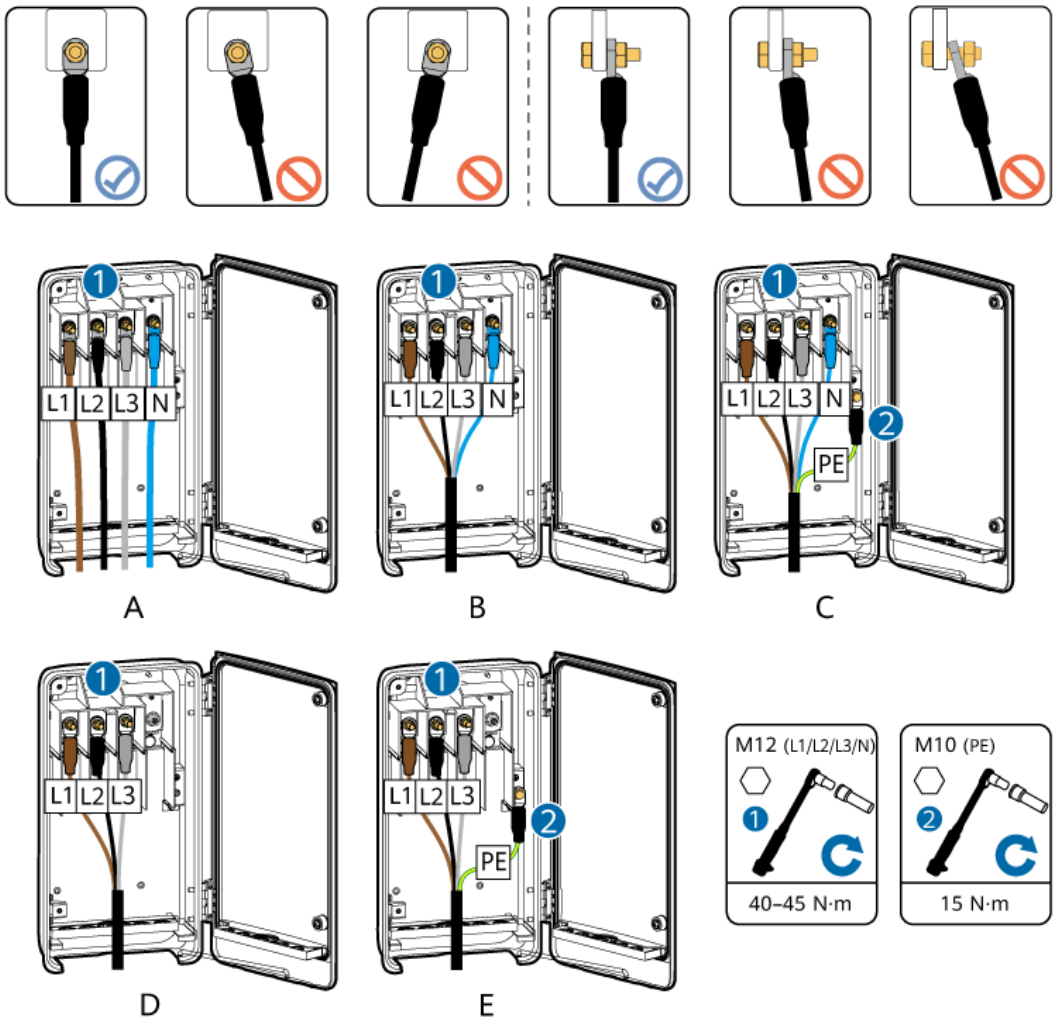

(A) Single-core cable	(B) Four-core cable (including the neutral wire)	(C) Five-core cable
(D) Three-core cable	(E) Four-core cable (including the PE wire)	-

Copyright © Huawei Technologies Co., Ltd.

NOTICE

- Reserve sufficient slack for the PE wire to ensure that the PE wire is the last cable bearing the force when the AC output power cable is subject to a pulling force due to force majeure.
- After cables are connected, prevent them from contacting the inter-phase baffle plates.

Figure 5-7 Single-core cable connection

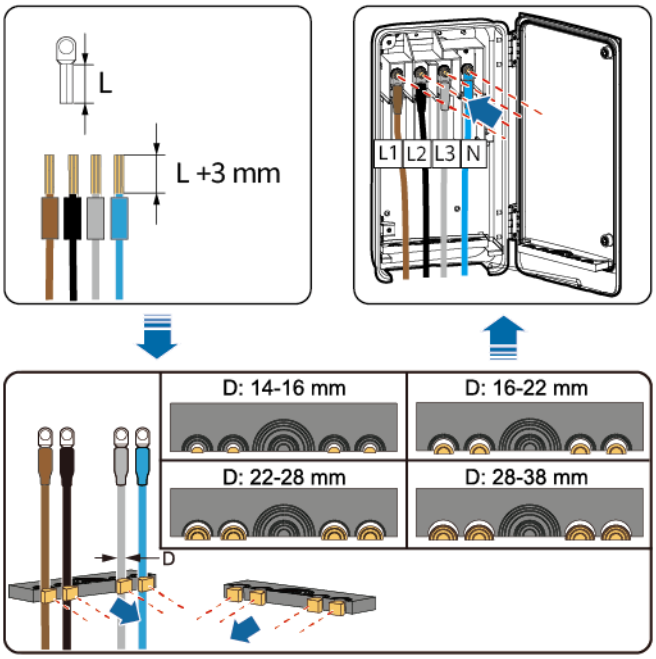

NOTICE

If a multi-core cable is used, it is recommended that the stripping length of the L2 wire be 15 mm shorter than those of the L1 and L3 wires.

 Copyright © Huawei Technologies Co., Ltd.

Figure 5-8 Multi-core cable connection (using a five-core cable as an example)

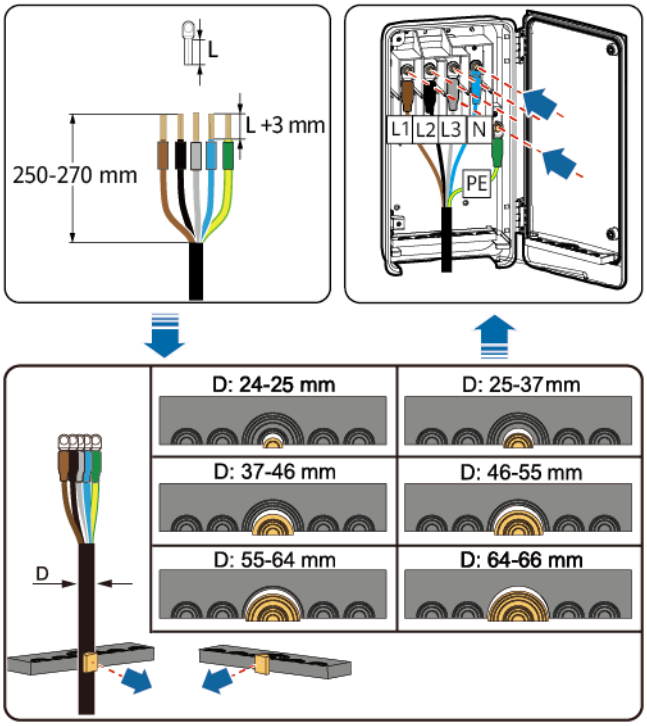

Step 3 Clear foreign matter from the maintenance compartment, close the maintenance compartment door, and check that the cable holes at the bottom of the maintenance compartment are sealed.

Figure 5-9 Closing a door

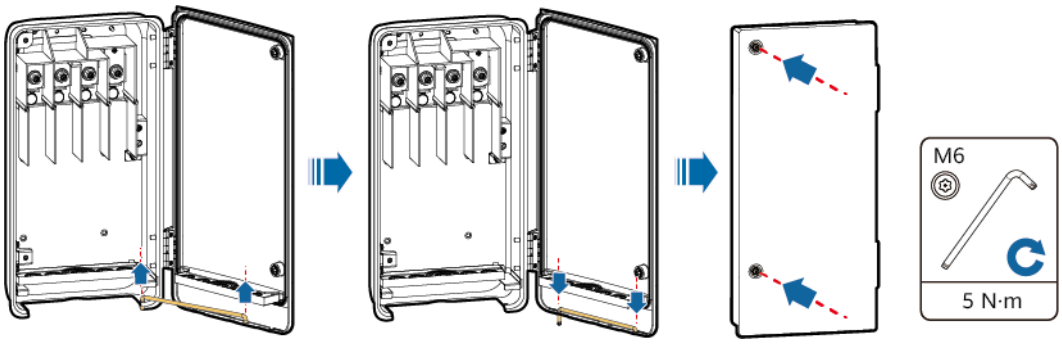

----End

5.5 Connecting DC Input Power Cables

Precautions

DANGER

- Before connecting the DC input power cables, ensure that the DC voltage is within the safety voltage range (lower than 60 V DC) and that each **DC SWITCH** of the inverter is **OFF**. Otherwise, the high voltage may result in electric shocks.
- When the inverter operates in grid-tied mode, do not perform maintenance or operations on the DC input power cables, such as connecting or disconnecting a PV string or a PV module in the PV string. Otherwise, electric shocks or arcing (which may cause fire) may occur.
- For details about how to remove and insert DC input connectors, see **8.3 Power-Off for Maintenance**.

WARNING

Ensure that the following conditions are met. Otherwise, the inverter may be damaged or even a fire may occur.

- According to IEC 62548, the maximum open-circuit voltage of each PV string cannot exceed 1100 V DC at the lowest average annual dry-bulb temperature.
- The polarities of electric connections must be correct on the DC input side. The positive and negative terminals of a PV string must be connected to corresponding positive and negative DC input terminals of the inverter.

WARNING

During the installation of PV strings and the inverter, the positive or negative terminals of PV strings may be short-circuited to ground if the power cables are not properly installed or routed. In this case, an AC or DC short circuit may occur and damage the inverter. The resulting device damage is not covered under any warranty.

CAUTION

Take waterproof and insulation measures for unused DC power cables to avoid personal injury or property loss caused by accidental contact with high voltage or other reasons.

 Copyright © Huawei Technologies Co., Ltd.

NOTICE

- Ensure that the PV module output is well insulated to ground.
- All PV strings connecting to the same MPPT circuit shall consist of the same quantity of PV modules of the same model.
- To ensure the optimal power generation of the system, the voltage difference between different MPPT circuits shall be less than 126 V.
- The inverter does not support full parallel connection for PV strings (full parallel connection: PV strings connect to one another in parallel outside the inverter and then connect to it separately).

Terminal Description

The inverter provides 21 DC input terminals, which are controlled by its two DC switches: DC SWITCH 1 controls the DC input terminals PV1–PV9 and DC SWITCH 2 controls the DC input terminals PV10–PV21.

Figure 5-10 DC terminals controlled by DC SWITCH 1

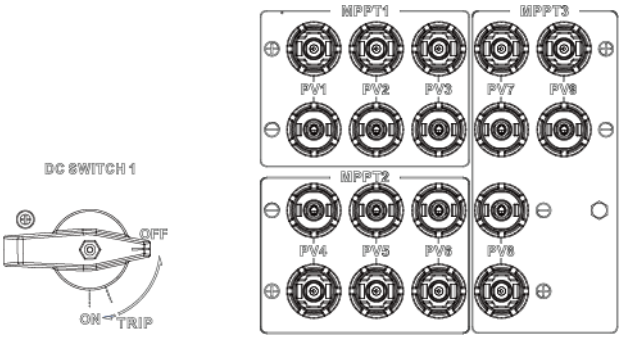

Figure 5-11 DC terminals controlled by DC SWITCH 2

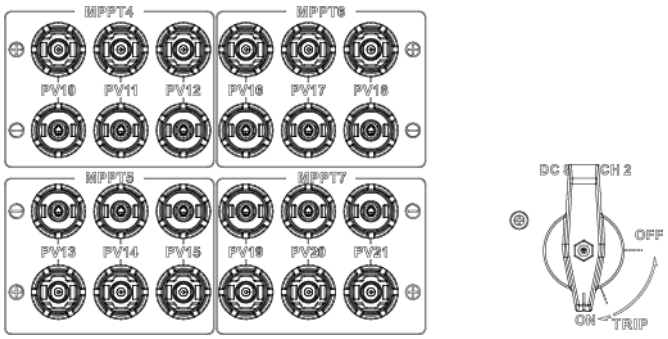

If the DC input terminals are not fully configured with PV strings, evenly distribute the DC input PV strings on each MPPT. For 8 to 20 PV strings, the following DC input terminals are recommended.

NOTICE

- For more than 7 PV strings, all MPPT circuits must have PV strings connected.
- Connect the third PV string to an MPPT circuit only after each MPPT circuit has been connected to two PV strings.
- The newly added PV strings shall be connected to MPPT1 and MPPT7 preferentially.
- The quantities of PV strings under DC SWITCH 1 and DC SWITCH 2 shall be the same if possible.

Quantity of PV Strings	Terminal Selection	Quantity of PV Strings	Terminal Selection
8	PV1/3/4/9/10/13/18/21 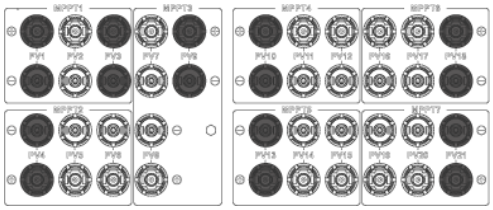	9	PV1/3/4/9/10/13/18/19/21 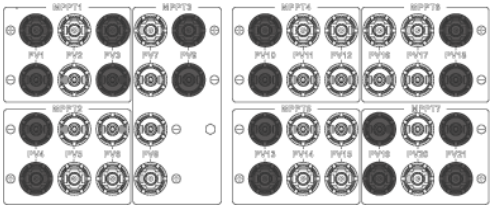
10	PV1/3/4/6/9/10/13/18/19/21 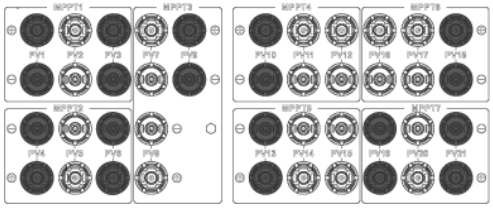	11	PV1/3/4/6/9/10/13/16/18/19/21 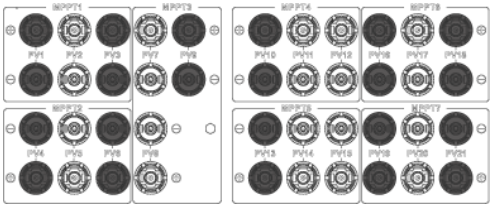
12	PV1/3/4/6/8/9/10/13/16/18/19/21 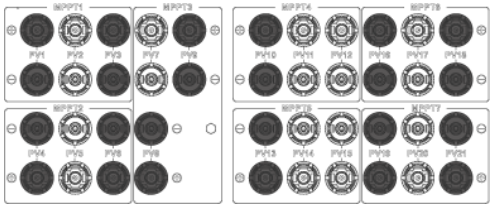	13	PV1/3/4/6/8/9/10/13/15/16/18/19/21 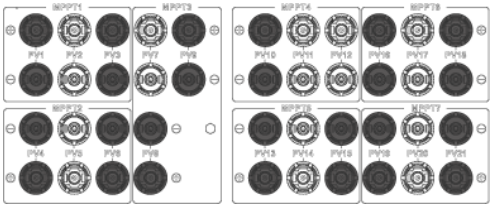
14	PV1/3/4/6/8/9/10/12/13/15/16/18/19/21 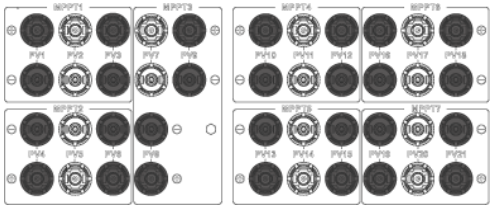	15	PV1/2/3/4/6/8/9/10/12/13/15/16/18/19/21 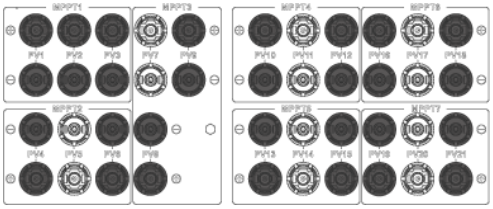

Copyright © Huawei Technologies Co., Ltd.

Quantity of PV Strings	Terminal Selection	Quantity of PV Strings	Terminal Selection
16	PV1/2/3/4/6/8/9/10/12/13/15/16/18/19/20/21 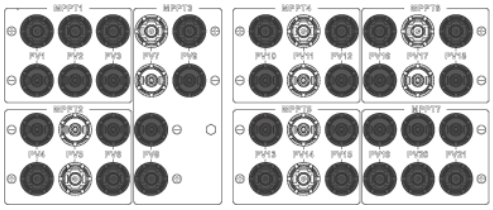	17	PV1/2/3/4/5/6/8/9/10/12/13/15/16/18/19/20/21 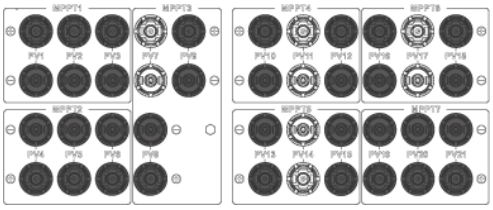
18	PV1/2/3/4/5/6/8/9/10/12/13/15/16/17/18/19/20/21 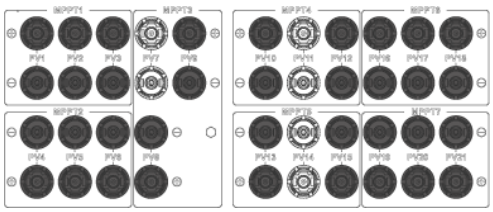	19	PV1/2/3/4/5/6/8/9/10/12/13/14/15/16/17/18/19/20/21 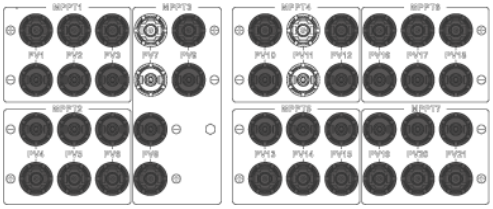
20	PV1/2/3/4/5/6/7/8/9/10/12/13/14/15/16/17/18/19/20/21 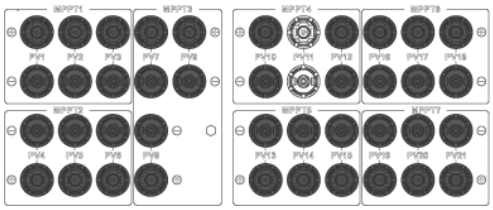	-	-

Procedure

NOTICE

- Use the PV connectors delivered with the inverter. If the PV connectors are lost or damaged, purchase the connectors of the same model. The device damage caused by incompatible PV connectors is not covered under any warranty.
- Connect the connectors on the PV strings to the connectors on the inverter, and pull back the connectors on the PV strings along the axial direction to check whether the connectors are securely installed.
- Ensure that the connectors are properly connected. Any connector damage due to improper connection is not covered under any warranty.

 Copyright © Huawei Technologies Co., Ltd.

NOTE

The multimeter must have a DC voltage range of at least 1100 V. If the voltage is a negative value, the DC input polarity is incorrect. Rectify the connection. If the voltage is greater than 1100 V, too many PV modules are connected to the same string. Remove some PV modules.

Step 1 Before connecting PV strings to the inverter, ensure that the insulation resistance of each PV string to the ground is normal.

Test method: Use an insulation resistance tester to test the insulation resistance of the PV– cable to the ground. Add a DC voltage of more than 1000 V between the PV– cable and the ground and check the insulation resistance.

- If the insulation resistance is greater than or equal to 1 MΩ, the insulation resistance is normal.
- If the insulation resistance is less than 1 MΩ, troubleshoot the insulation fault of the cable or PV string.

Figure 5-12 Testing the insulation resistance

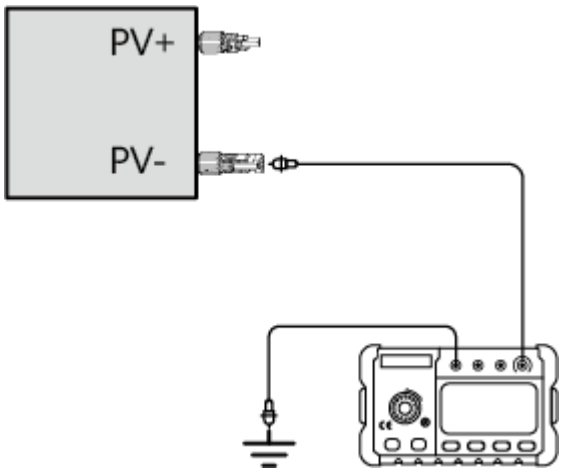

NOTE

You can prepare a tool to connect all PV– cables together using a conversion adapter and measure the ground insulation resistance of all PV– cables of an inverter at a time.

Figure 5-13 Measuring the insulation resistance of all PV– cables

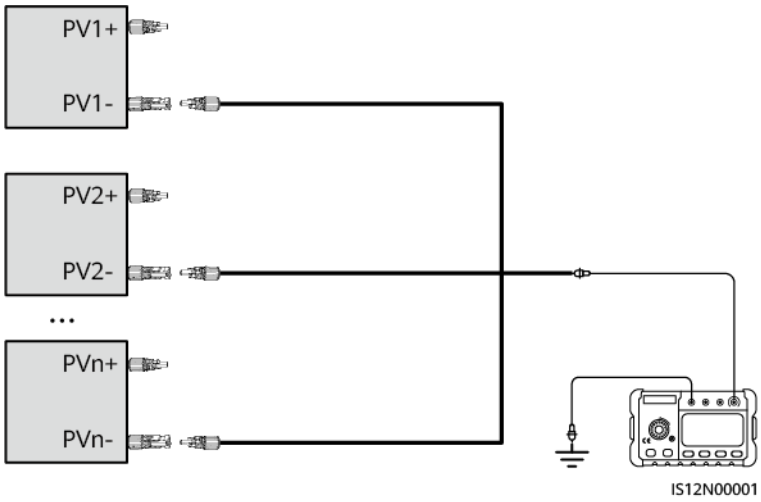

Step 2 Connect DC input power cables.

Figure 5-14 Connecting DC input power cables (AVIC JONHON)

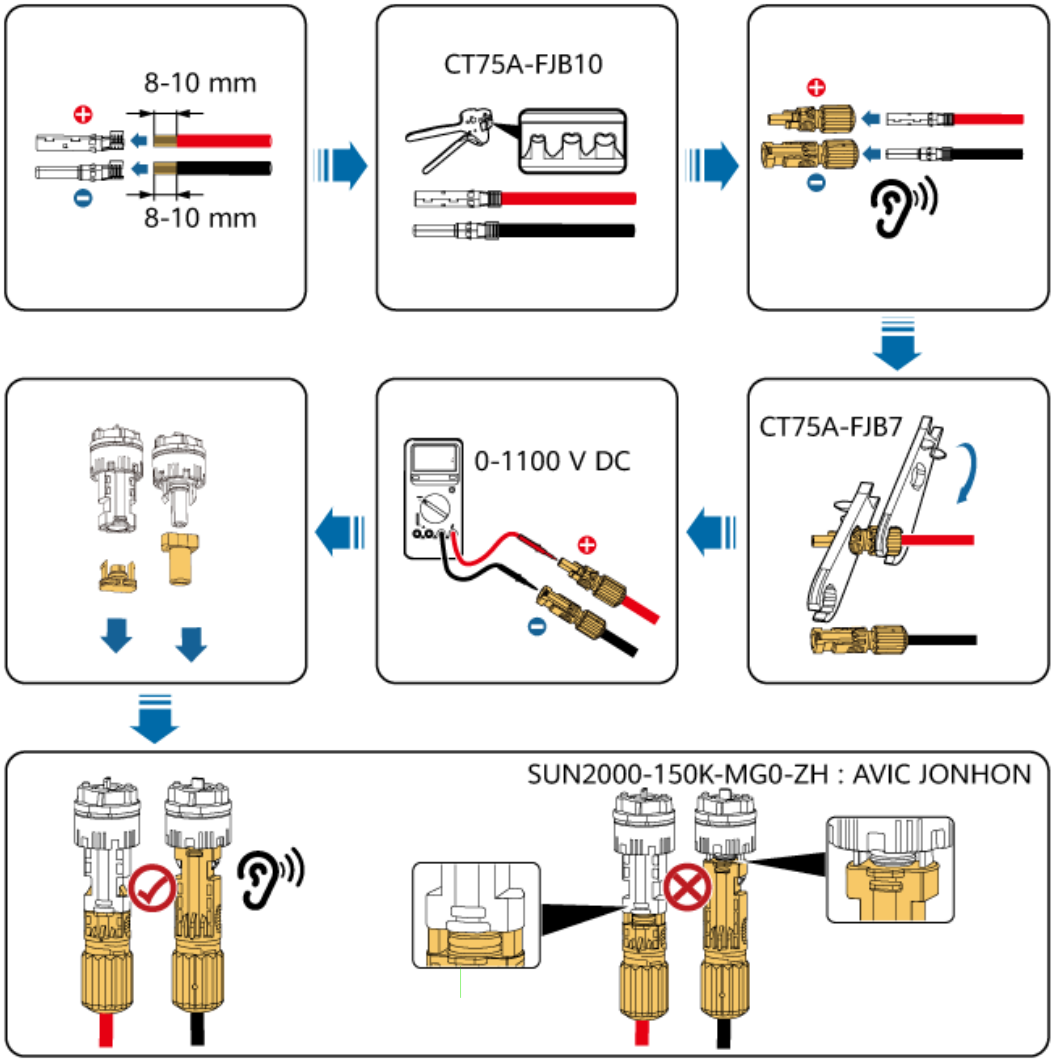

Figure 5-15 Connecting DC input power cables (Amphenol)

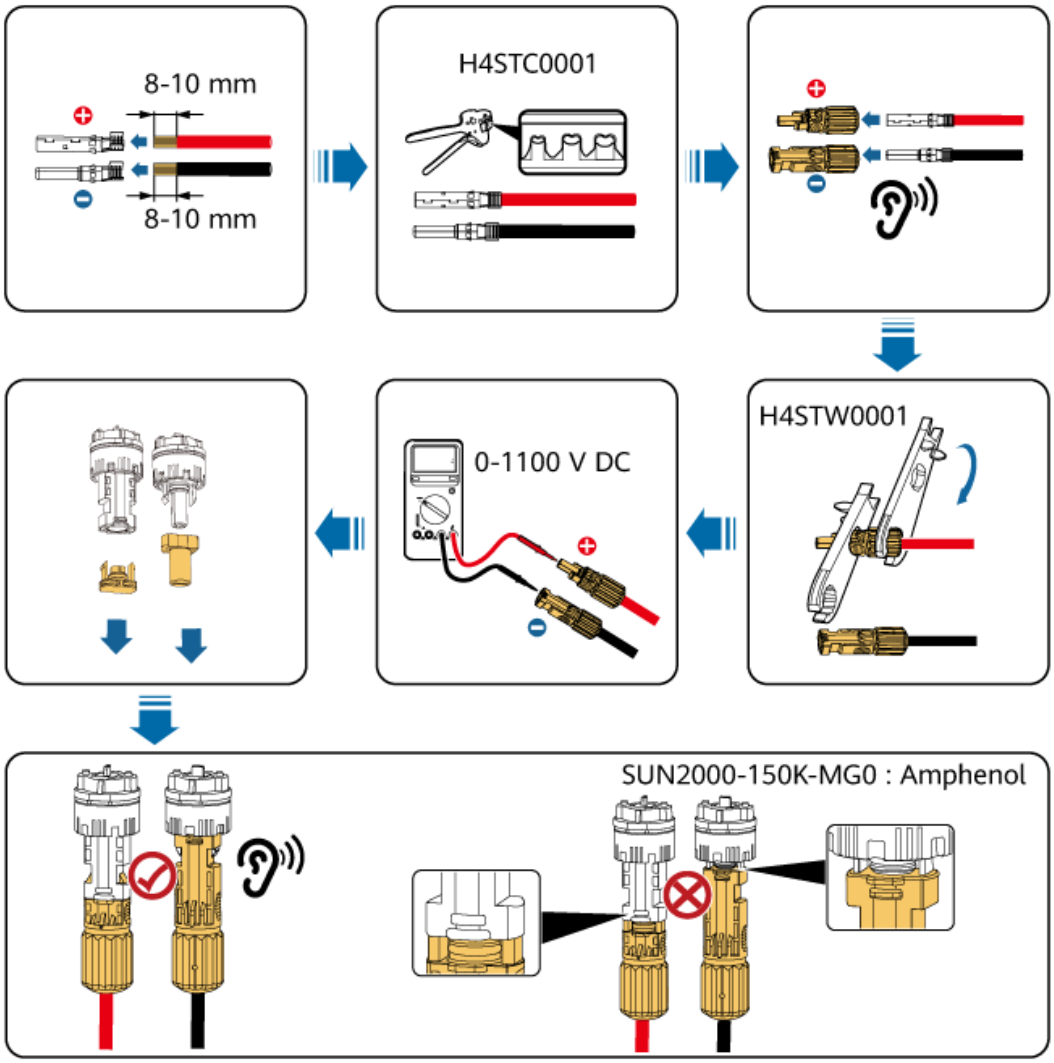

NOTICE

When installing DC input power cables, leave at least 150 mm of slack. The axial tension on PV connectors must not exceed 80 N. Radial stress or torque must not be generated on PV connectors.

Step 3 Use sealing plugs with snap-fits to seal the DC input terminals that are not connected to PV strings. Device damage caused by the absence of sealing plugs is not covered by warranty.

 Copyright © Huawei Technologies Co., Ltd.

Figure 5-16 Sealing plugs with snap-fits

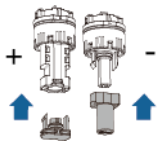

SUN2000-150K-MG0-ZH	Sealing plug+/Sealing plug–: CT75A-FJB6/CT75A-FJB5
SUN2000-150K-MG0	Sealing plug+/Sealing plug–: HY024-FHG-3/HY024-FHG-4

----End

5.6 Connecting Signal Cables

Precautions

When routing communications cables, separate communications cables from power cables to prevent communication from being affected.

COM Port Pin Definitions

Figure 5-17 Communications port

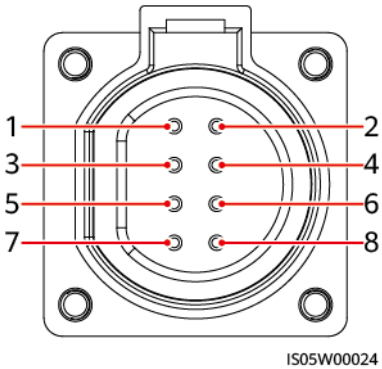

Port	Pin	Definition	Pin	Definition	Description
RS485-1	1	RS485A IN, RS485 differential signal+	2	RS485A OUT, RS485 differential signal+	Used to cascade inverters or connect devices such as the SmartLogger.
	3	RS485B IN, RS485 differential signal–	4	RS485B OUT, RS485 differential signal–	
PE	5	PE, shield layer grounding	6	PE, shield layer grounding	-

 Copyright © Huawei Technologies Co., Ltd.

Port	Pin	Definition	Pin	Definition	Description
RS485-2	7	RS485A, RS485 differential signal+	8	RS485B, RS485 differential signal–	Connect to the RS485 signal port of devices such as a power meter.

Procedure

Step 1 Connect the RS485 communications cables.

Figure 5-18 Connecting communications cables

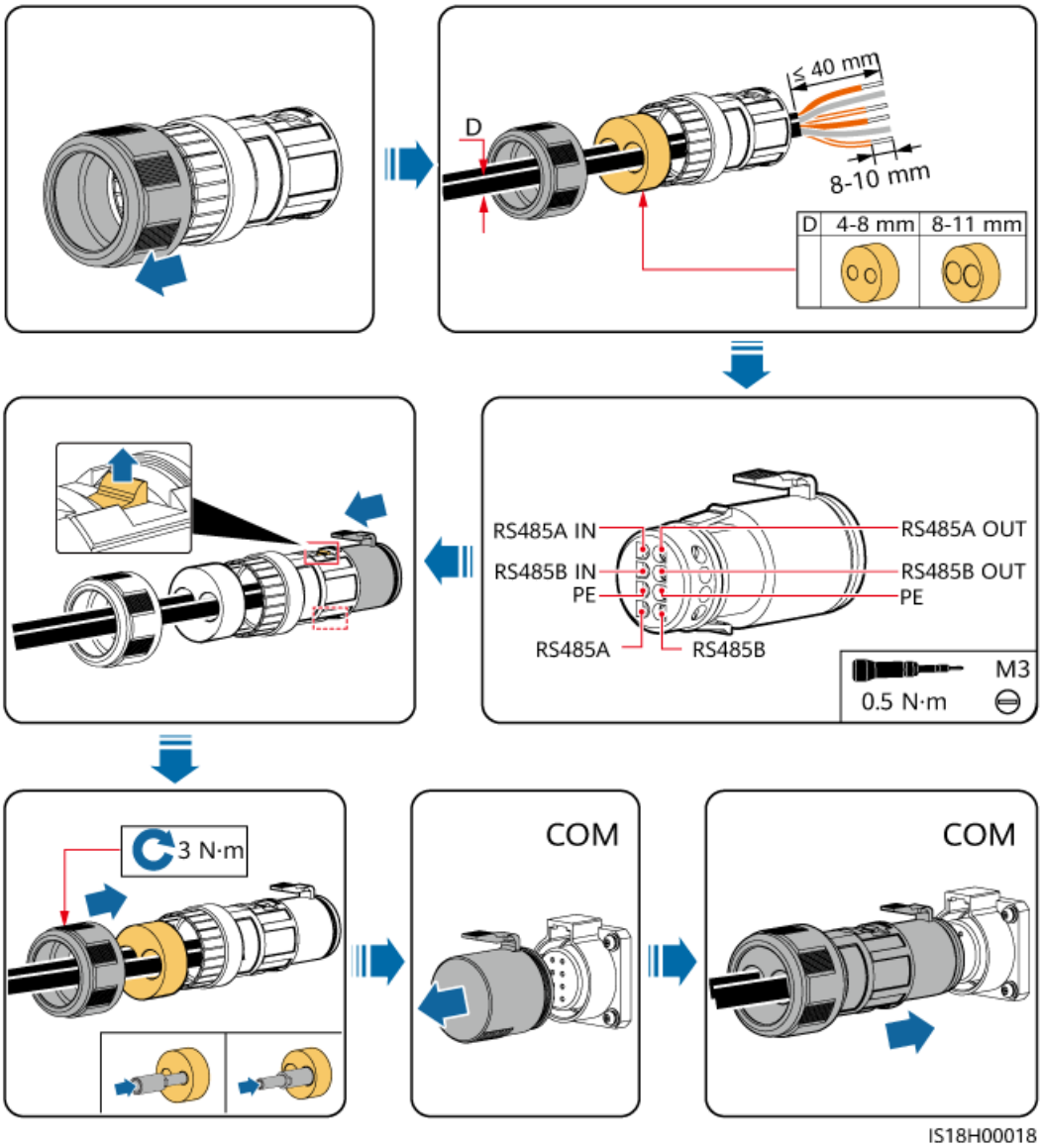

NOTICE

Use a plug to block the unused cable hole with the waterproof rubber ring, and then tighten the locking cap.

----End

5.7 (Optional) Installing the Smart Dongle

- 4G Smart Dongle

NOTICE

- If your Smart Dongle is not configured with a SIM card, you need to prepare one (dimensions: 25 mm x 15 mm; capacity: ≥ 64 KB).
- When installing the SIM card, determine its installation direction based on the silk screen and arrow on the card slot.
- Press the SIM card in place to lock it, indicating that the SIM card is correctly installed.
- When removing the SIM card, push it inward to eject it.
- When reinstalling the enclosure of the Smart Dongle, ensure that the snap-fits click into place.

Figure 5-19 Installing the 4G Smart Dongle (SDongleB-06)

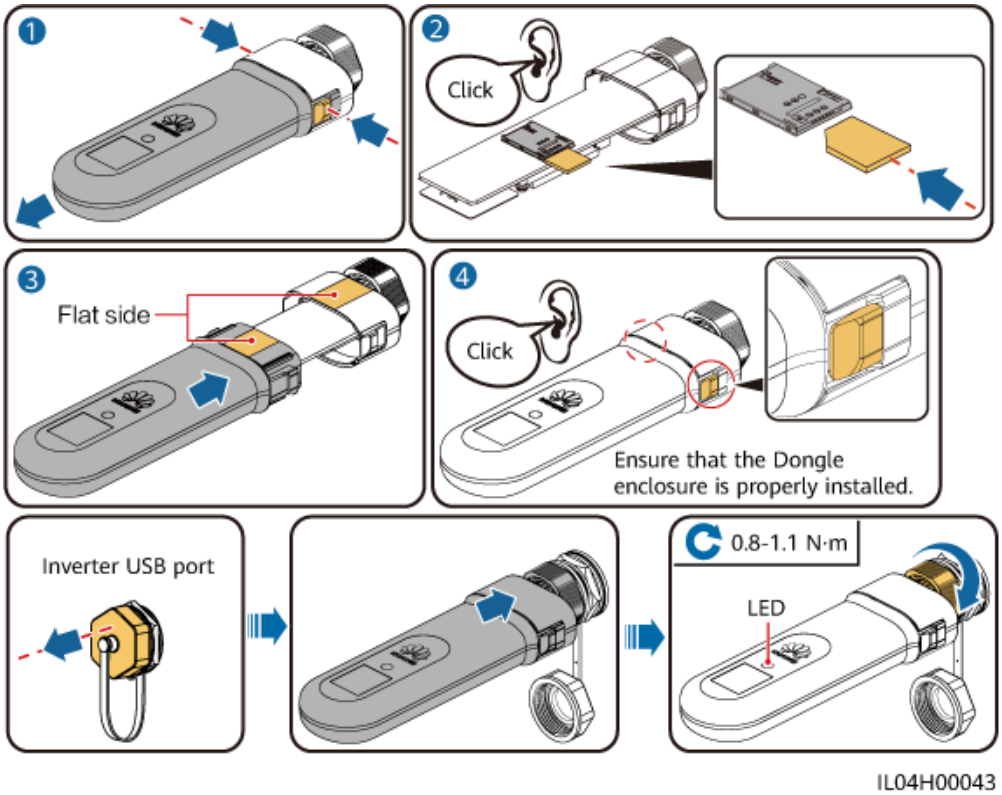

Copyright © Huawei Technologies Co., Ltd.

- WLAN-FE Smart Dongle (WLAN communication)

Figure 5-20 Installing the WLAN-FE Smart Dongle (SDongleA-05 for the WLAN communication scenario)

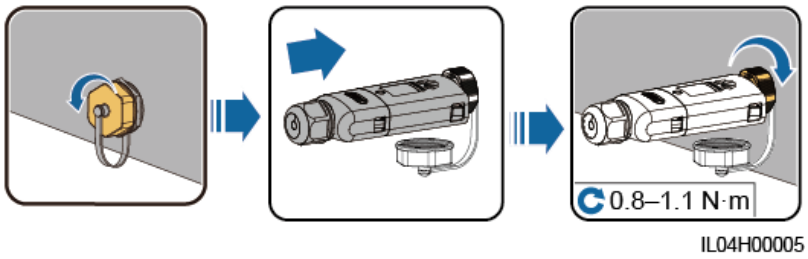

- WLAN-FE Smart Dongle (FE communication)

Figure 5-21 Installing the WLAN-FE Smart Dongle (SDongleA-05 for the FE communication scenario)

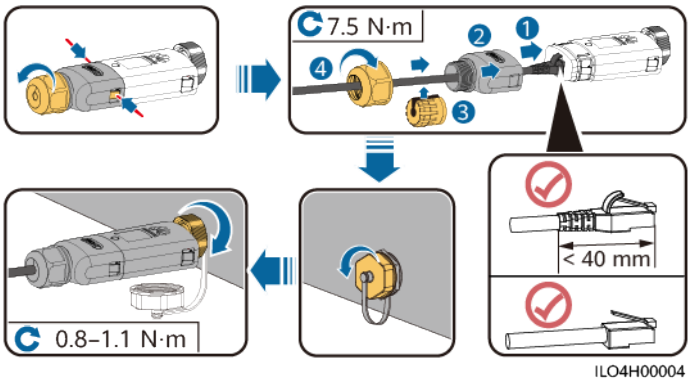

NOTICE

Install the network cable before installing the Smart Dongle on the inverter.

NOTE

- For details about how to use the WLAN-FE Smart Dongle SDongleA-05, see **SDongleA-05 Smart Dongle Quick Guide (WLAN-FE)**. You can scan the QR code below to obtain the guide.
- For details about how to use the 4G Smart Dongle SDongleB-06, see **SDongleB-06 Smart Dongle Quick Guide (4G)**. You can scan the QR code below to obtain the guide.

The quick guide is delivered with the Smart Dongle.

6 Checking Before Power-On

Table 6-1 Checklist

No.	Check Item	Acceptance Criteria
1	Inverter	The inverter is installed correctly and securely.
2	Smart Dongle	The Smart Dongle is installed correctly and securely.
3	Cable routing	Cables are routed properly as required by the customer.
4	Cable tie	Cable ties are evenly distributed and no sharp edge exists.
5	Grounding	The PE cable is connected correctly, securely, and reliably.
6	Switch	All **DC SWITCH** and other switches connected to the inverter are turned off.
7	Cable connection	The AC output power cable, DC input power cables, and signal cables are connected correctly and securely.
8	Unused terminal and port	Unused terminals and ports are locked by waterproof glands.
9	Installation environment	The installation space is proper, and the installation environment is clean and tidy.

 Copyright © Huawei Technologies Co., Ltd.

7 Power-On and Commissioning

DANGER

- Wear personal protective equipment and use dedicated insulated tools to avoid electric shocks or short circuits.

7.1 Powering On the Inverter

Precautions

WARNING

When LED2 is steady green (the inverter is connected to the grid), do not turn on the DC switch. Otherwise, the inverter may be damaged because insulation resistance detection is not performed. You must power off the inverter first, and then turn on the DC switch and restart the inverter.

 Copyright © Huawei Technologies Co., Ltd.

NOTICE

- Before the equipment is put into operation for the first time, ensure that the parameters are set correctly by professional personnel. Incorrect parameter settings may result in noncompliance with local grid connection requirements and affect the normal operations of the equipment.
- If the DC power supply is connected but the AC power supply is disconnected, the inverter will report the **Shutdown: Fault** fault. The inverter can start properly only after the fault is automatically rectified.
- The DC switches implement automatic disconnection. If cables are reversely connected, PV modules are not properly configured, or an internal fault occurs in the inverter, the DC switches automatically turn off for protection. In this case, rectify the fault as prompted on the app, check that the alarm is cleared, and then turn on the DC switches. Device damage caused by forcible switch-on after the DC switches turn off is not covered by the warranty. (**If the DC switches automatically turn off due to an internal fault of the inverter, the Device Fault alarm will be reported. Do not turn on the DC switches again. Perform operations according to the alarm indication.**)
- When the system is powered on or running, ensure that there are no obstacles in path of travel of the DC switch handles (for example, the handles are not stuck by cables or mistakenly held by hands) to ensure that the handles can move freely. Otherwise, the DC switches cannot automatically turn off.
- If an inverter has not been running for more than half a year after being mounted, it must be checked and tested by professionals before being put into operation.

Procedure

Step 1 At the AC switch between the inverter and the power grid, use a multimeter to measure the grid voltage and ensure that the voltage is within the allowed operating voltage range of the inverter. If the voltage is not in the allowed range, check the circuits.

Step 2 Turn on the AC switch between the inverter and the power grid.

Step 3 Set **DC SWITCH 1** at the bottom of the inverter to **ON**. When you hear a click, the switch is on.

Step 4 Check the status of the PV connection indicator. When the PV connection indicator is steady green, set **DC SWITCH 2** to **ON**.

Step 5 Observe the LED indicators to check the status of the inverter.

 Copyright © Huawei Technologies Co., Ltd.

Indicator	Status (Blinking Fast: On for 0.2s and Off for 0.2s; Blinking Slowly: On for 1s and Off for 1s)		Meaning
PV connection indicator	Steady green		At least one PV string is properly connected, and the DC input voltage of the corresponding MPPT circuit is at least 200 V.
	Blinking green fast		If the alarm/maintenance indicator is red, an environmental fault at the DC side of the inverter was generated.
	Off		The inverter is disconnected from all PV strings, or the DC input voltage of all MPPT circuits is less than 200 V.
	Steady red		If the alarm/maintenance indicator is red, an internal fault on the DC side of the inverter is generated.
Grid connection indicator	Steady green		The inverter is in grid-tied mode.
	Blinking green fast		If the alarm/maintenance indicator is red, an environmental fault on the AC side of the inverter was generated.
	Off		The inverter is not in grid-tied mode.
	Steady red		If the alarm/maintenance indicator is red, an internal fault on the AC side of the inverter was generated.
Communication indicator	Blinking green fast		The inverter receives communication data normally.
	Off		The inverter has not received communication data for 10 seconds.
Alarm/ Maintenance indicator	Alarm	Steady red	A major alarm was generated. ● If the PV connection indicator or grid connection indicator is blinking green fast, rectify DC or AC environmental faults as instructed by the SUN2000 app. ● If neither the PV connection indicator nor the grid connection indicator is blinking green fast, replace components or the inverter as instructed by the SUN2000 app.
		Blinking red fast	A minor alarm was generated.
		Blinking red slowly	A warning alarm was generated.

 Copyright © Huawei Technologies Co., Ltd.

Indicator	Status (Blinking Fast: On for 0.2s and Off for 0.2s; Blinking Slowly: On for 1s and Off for 1s)		Meaning
	Local maintenance	Steady green	The local maintenance is successful.
		Blinking green fast	The local maintenance failed.
		Blinking green slowly	The device is under local maintenance or shut down after receiving a command.

Step 6 (Optional) Observe the Smart Dongle LED indicator to check the status of the Smart Dongle.

- WLAN-FE Smart Dongle

Table 7-1 LED indicators

LED Indicator	Status	Remarks	Description
-	Off	Normal	The Smart Dongle is not secured or is not powered on.
Yellow (steady green and red simultaneously)	Steady on		The Smart Dongle is secured and powered on.
Red	Blinking fast (on for 0.2s and then off for 0.2s)		The parameters for accessing the router have not been set.
Red	Steady on	Abnormal	Replace the Smart Dongle because it has an internal fault.

 Copyright © Huawei Technologies Co., Ltd.

LED Indicator	Status	Remarks	Description
Blinking red and green alternatively	Blinking slowly (on for 1s and then off for 1s)	Abnormal	Communication with the inverter fails. – Remove and insert the Smart Dongle. – Check whether the inverter matches the Smart Dongle. – Connect the Smart Dongle to another inverter. Check whether the Smart Dongle is faulty or the USB port of the inverter is faulty.
Green	Blinking slowly (on for 0.5s on and off for 0.5s)	Normal	The device is accessing the router.
Green	Steady on		Connection to the management system is successful.
Green	Blinking fast (on for 0.2s and then off for 0.2s)		The inverter is communicating with the management system through the Smart Dongle.

- 4G Smart Dongle

Table 7-2 LED indicators

LED Indicator	Status	Remarks	Description
-	Off	Normal	The Smart Dongle is not secured or is not powered on.
Yellow (steady green and red simultaneously)	Steady on	Normal	The Smart Dongle is secured and powered on.
Green	The indicator blinks at an interval of 2s, on for 0.1s and then off for 1.9s.	Normal	The dial-up connection is in progress for less than 1 minute.

 Copyright © Huawei Technologies Co., Ltd.

LED Indicator	Status	Remarks	Description
		Abnormal	If the duration is longer than 1 minute, the 4G parameter settings are incorrect. Reset the parameters.
	Blinking slowly (on for 1s and then off for 1s)	Normal	The dial-up connection is set up successfully (duration < 30s).
		Abnormal	If the duration is longer than 30s, the settings of the management system parameters are incorrect. Reset the parameters.
	Steady on	Normal	Connection to the management system is successful.
	Blinking fast (on for 0.2s and then off for 0.2s)		The inverter is communicating with the management system through the Smart Dongle.
Red	Steady on	Abnormal	Replace the Smart Dongle because it has an internal fault.
	Blinking fast (on for 0.2s and then off for 0.2s)		The Smart Dongle has no SIM card or the SIM card is in poor contact. Check whether the SIM card has been installed or is in good contact. If not, install the SIM card, or remove and insert the SIM card.

 Copyright © Huawei Technologies Co., Ltd.

LED Indicator	Status	Remarks	Description
	Blinking slowly (on for 1s and then off for 1s)		The Smart Dongle fails to connect to the management system because the SIM card runs out of the data quota or the signal strength is poor. If the Smart Dongle is reliably connected, check the SIM card signal through the app. If no signal is received or the signal strength is weak, contact the carrier. Check whether the tariff and data quota of the SIM card are normal. If not, top up the SIM card or purchase a data package.
Blinking red and green alternatively	Blinking slowly (on for 1s and then off for 1s)		Communication with the inverter fails. – Remove and insert the Smart Dongle. – Check whether the inverter matches the Smart Dongle. – Connect the Smart Dongle to another inverter. Check whether the Smart Dongle is faulty or the USB port of the inverter is faulty.

----End

7.2 Commissioning Methods and Process

The inverter can be commissioned on the SmartLogger WebUI or FusionSolar app.

Figure 7-1 Commissioning process on the SmartLogger WebUI

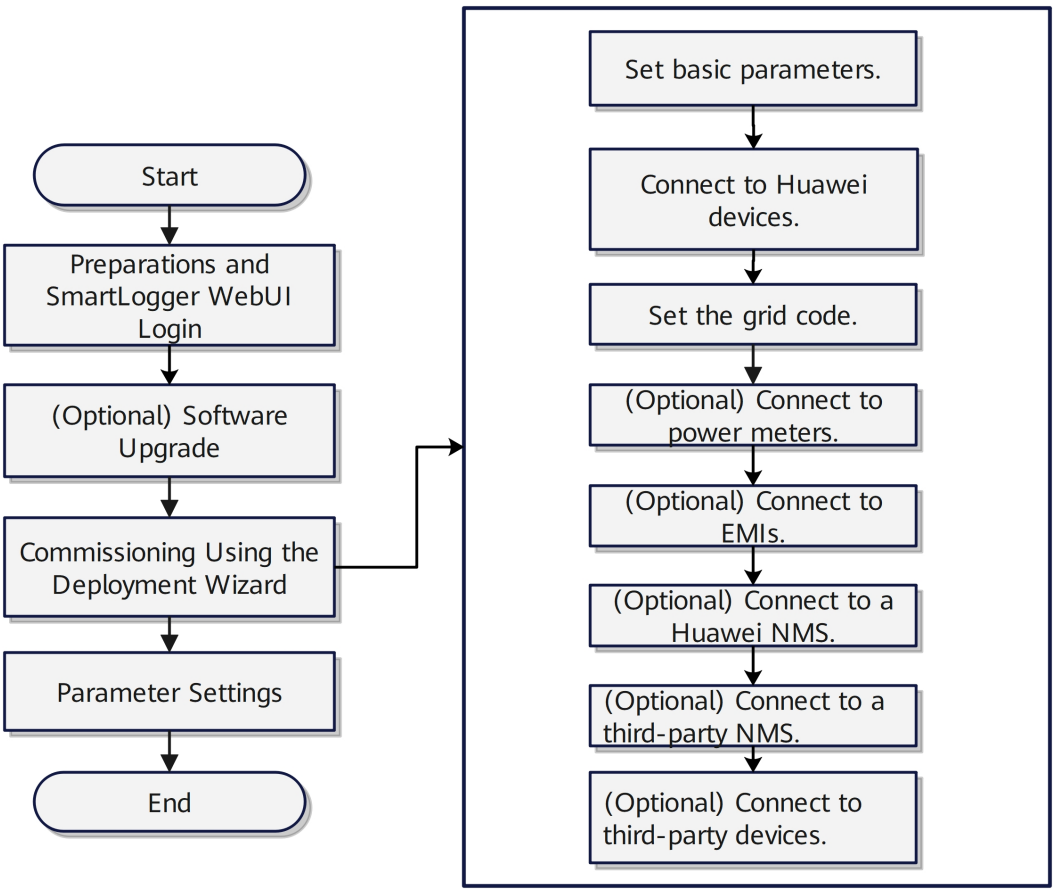

Figure 7-2 Commissioning process on the FusionSolar app

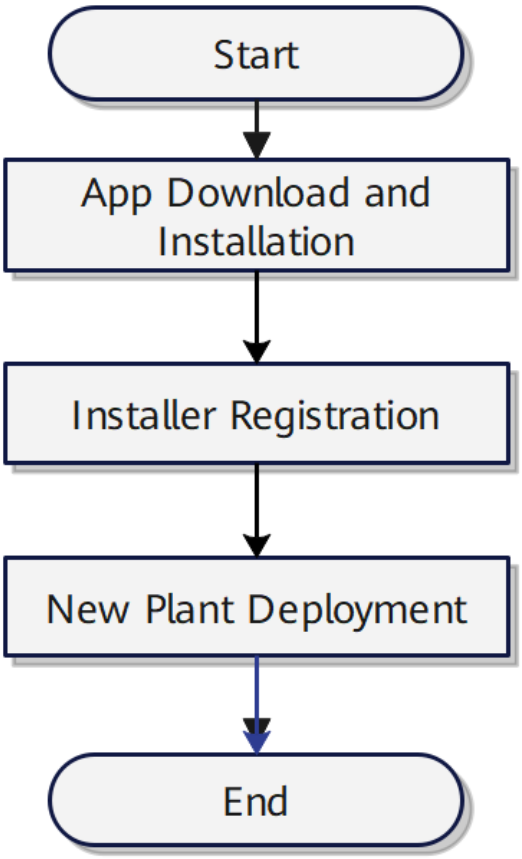

7.3 Commissioning the SUN2000 (Using the SmartLogger)

7.3.1 Preparations and SmartLogger WebUI Login

For details about preparations and WebUI login, see **SmartLogger3000 User Manual**.

7.3.2 Software Upgrade

For details about software upgrade, see the **SmartLogger3000 User Manual**.

7.3.3 Commissioning Using the Deployment Wizard

Procedure

Step 1 Set basic parameters.

Figure 7-3 Setting basic parameters

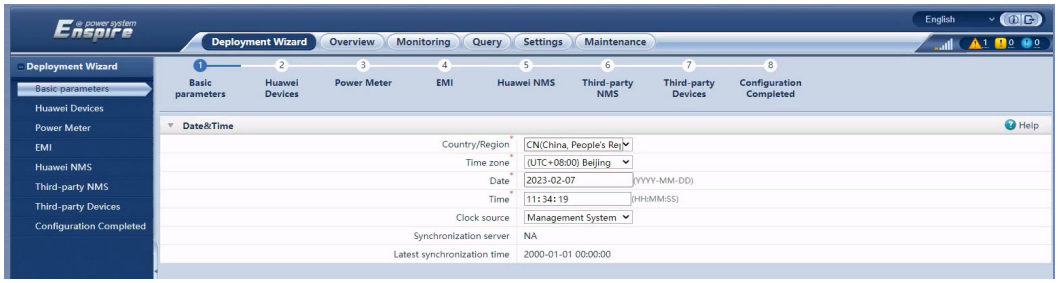

Step 2 Connect to Huawei devices.

- For RS485 communication, click **Search for Device**. The address is automatically allocated.
- For MBUS communication, click **Choose File** or **SN List** to add the SN of a device. Click **Submit** to deliver the added device. Then click **Search for Device**.

Step 3 After the device is connected, set the grid code based on the site requirements.

Figure 7-4 Setting the grid code

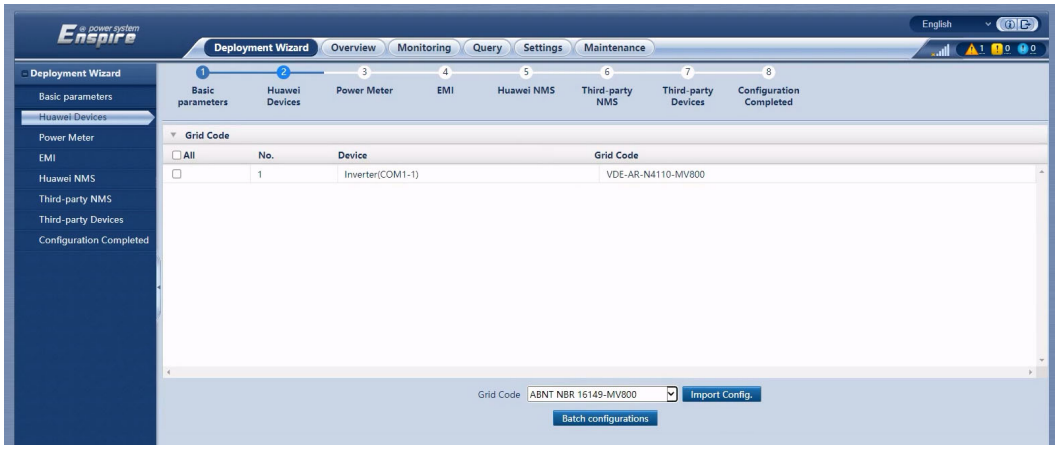

Step 4 Connect to power meters.

Set related parameters by referring to "**Setting Meter Parameters**" in the *SmartLogger3000 User Manual*.

 Copyright © Huawei Technologies Co., Ltd.

Figure 7-5 Connecting to power meters

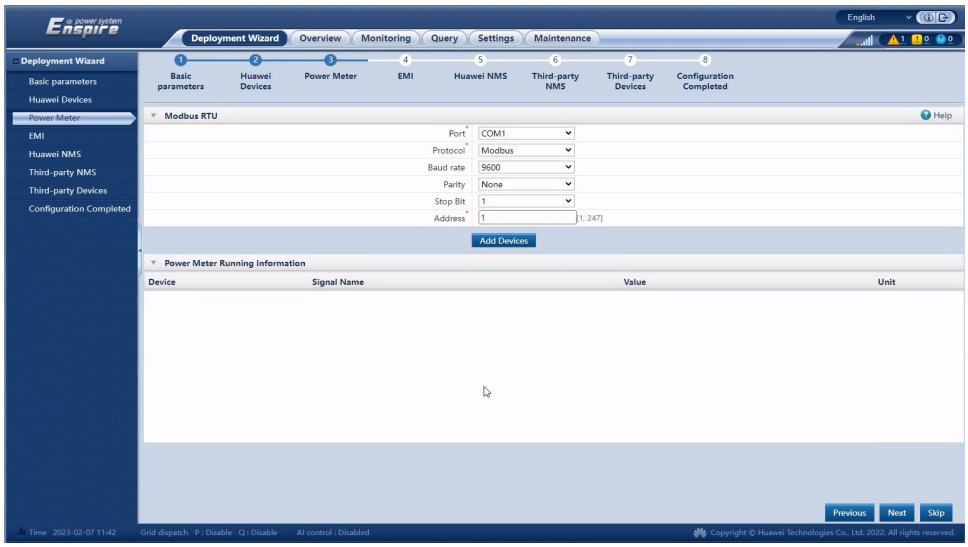

Step 5 Connect to EMIs.

Figure 7-6 Connecting to EMIs

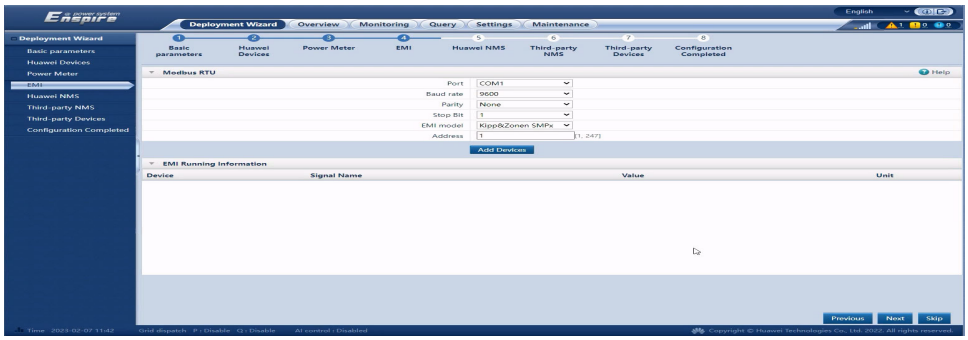

Step 6 Connect to a Huawei network management system (NMS).

Set related parameters by referring to "**Setting Parameters for Connecting to the Management System**" (content related to a Huawei NMS) in the *SmartLogger3000 User Manual*.

Figure 7-7 Connecting to a Huawei NMS

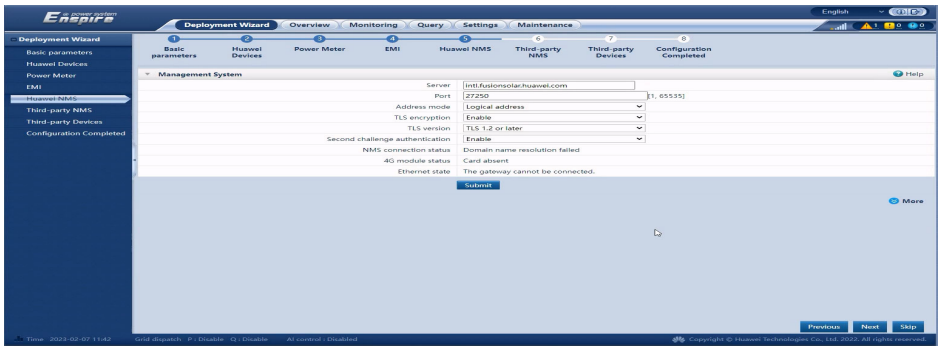

Step 7 Connect to a third-party NMS.

Set related parameters by referring to "**Setting Parameters for Connecting to the Management System**" (content related to a third-party NMS) in the *SmartLogger3000 User Manual*.

Figure 7-8 Connecting to a third-party NMS

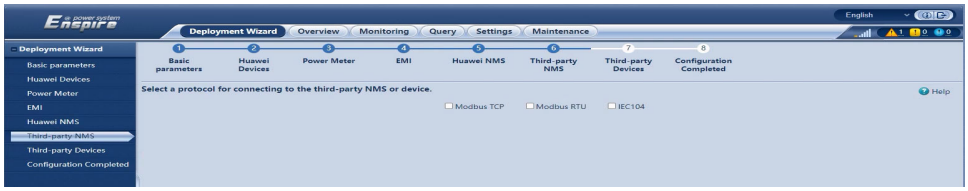

Step 8 Connect to third-party devices.

Set related parameters by referring to "**Setting Custom Device Parameters**" in the *SmartLogger3000 User Manual*.

Figure 7-9 Connecting to third-party devices

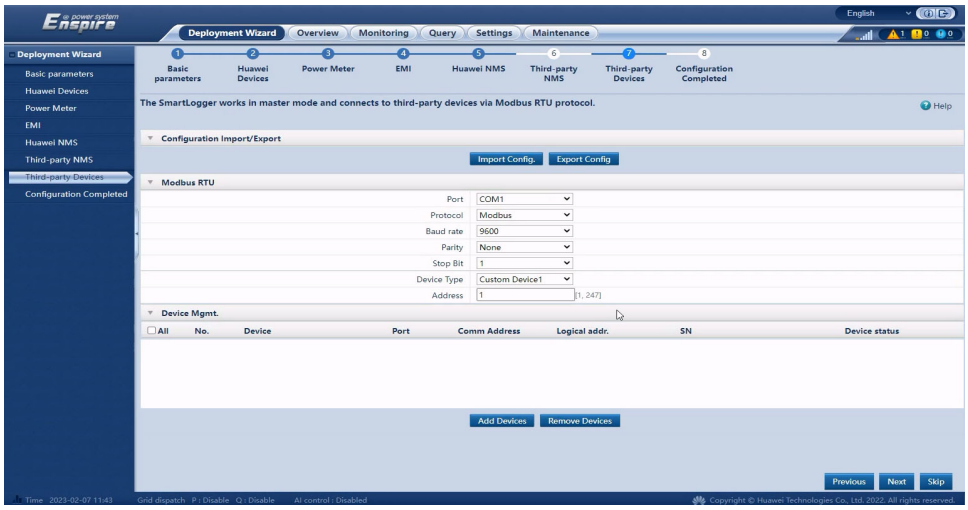

Step 9 Click **Finish** to complete the configuration.

Figure 7-10 Completing the configuration

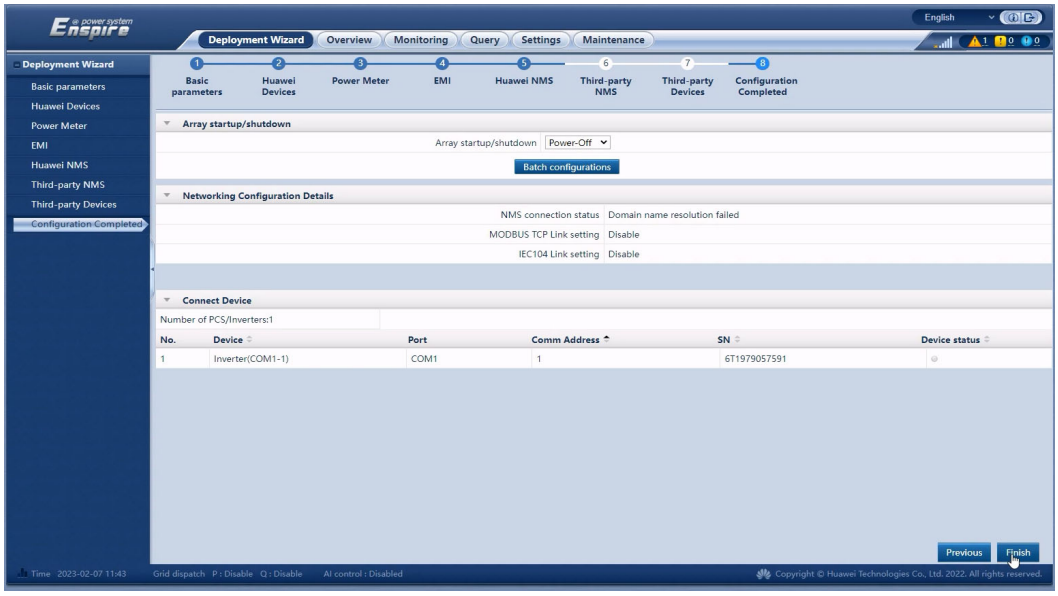

----End

7.3.4 Parameters Settings

Choose **Monitoring** > **Inverter** > **Running Param.**, set running parameters, and click **Submit**.

Figure 7-11 Setting running parameters

For details about the parameter settings, see the **SmartLogger3000 User Manual**.

7.4 Commissioning the SUN2000 (Using the App)

7.4.1 Downloading the FusionSolar App

For details, see **Downloading and Installing the App** in the **FusionSolar App User Manual**.

7.4.2 Registering an Installer Account

For details, see **Registering the Company's First Installer Account** in the **FusionSolar App User Manual**.

 Copyright © Huawei Technologies Co., Ltd.

7.4.3 Deploying a New Plant

For details, see **FusionSolar App Quick Guide**.

8 System Maintenance

DANGER

- Wear personal protective equipment and use dedicated insulated tools to avoid electric shocks or short circuits.

WARNING

- Before performing maintenance, power off the equipment, follow the instructions on the delayed discharge label, and wait for a period of time as specified to ensure that the equipment is not energized.

8.1 Routine Maintenance

To ensure that the inverter can operate properly for a long term, you are advised to perform routine maintenance on it as described in this section.

CAUTION

- Before cleaning the inverter, connecting cables, and checking the grounding reliability, power off the inverter and ensure that each **DC SWITCH** on the inverter is set to **OFF**.
- Do not open the maintenance compartment door on rainy or snowy days. If you need to, take protective measures to prevent rain or snow from entering the maintenance compartment. If protective measures cannot be taken, do not open the maintenance compartment door.

 Copyright © Huawei Technologies Co., Ltd.

Table 8-1 Maintenance checklist

Check Item	Check Method	Maintenance Method	Maintenance Interval
Alarm	Check alarms on the app, SmartLogger, or management system.	For details, see **9 Alarm Reference**. For details about alarm 2062, see **8.6 Locating Insulation Resistance Faults**.	Routine maintenance
Cleanness of air intake and exhaust vents	Periodically check whether there is dust or foreign objects at the air intake and exhaust vents.	Power off the inverter and remove dust and foreign objects. If necessary, remove the baffle plate from the air intake vent for cleaning.	Once every 6 to 12 months (or once every 3 to 6 months based on the actual dust conditions in the environment)
Fan	Check whether the fan generates abnormal noise during operation.	Remove foreign objects from the fan. If the abnormal noise persists, replace the fan. For details, see **8.4 Replacing a Fan**.	Once every 6 to 12 months
System running status	• Check whether the inverter is damaged or deformed. • Check whether the inverter generates abnormal sounds during operation. • Check whether all inverter parameters are correctly set during operation.	Contact the Company's service engineers.	Once every 6 months

 Copyright © Huawei Technologies Co., Ltd.

Check Item	Check Method	Maintenance Method	Maintenance Interval
Electrical connection	• Check whether cables are disconnected or loose. • Check whether cables are damaged, especially whether the cable sheath that contacts a metal surface is damaged. • Check whether the sealing plugs of unused DC input terminals fall off. • Check whether the unused COM and USB ports are locked by waterproof caps.	• Power off the inverter and secure loose or disconnected cables. • Power off the inverter and replace the damaged cables. • Install sealing plugs on unused DC input terminals. • Tighten the waterproof caps on the unused COM and USB ports.	6 months after the first commissioning and once every 6 to 12 months after that
Grounding reliability	Check whether the ground cables are securely grounded. Use a multimeter to check whether the ground resistance at the inverter ground screws is less than or equal to 4 Ω.	Tighten the screws on both sides of the ground cable and ensure that the resistance meets the requirements.	6 months after the first commissioning and once every 6 to 12 months after that
Vegetation around the inverter	Check whether there are weeds around the inverter.	• Perform inspection and weeding as required. • Clean the site promptly after weeding.	Based on the local wilting season

8.2 Shutdown and Power-Off

WARNING

After the system is powered off, the inverter is still energized and hot, which may cause electric shocks or burns. Therefore, wait for at least 15 minutes and wear PPE before working on the inverter.

 Copyright © Huawei Technologies Co., Ltd.

Step 1 Send a shutdown command on the app, SmartLogger, or management system.

For details, see the user manual of the corresponding product.

Step 2 Turn off the AC switch between the inverter and the power grid.

Step 3 Set the two **DC SWITCH** to **OFF**.

----End

8.3 Power-Off for Maintenance

Precautions

To prevent personal injury and device damage, use the DC current scale of a clamp meter to measure the PV string current (even if the DC switches have been turned off) before removing PV connectors when troubleshooting or replacing the inverter or PV strings. Ensure that the PV strings have no current, and quickly remove and insert connectors for adjustment.

CAUTION

- If the inverter is faulty, do not stand in front of it if possible.
- If the LED1 indicator on the inverter is off and each DC switch is set to **OFF**, do not operate any DC switch on the inverter. For details, see **Step 4**.
- Do not operate any DC switch on the inverter before you perform **Step 3** to **Step 5**.
- When the inverter detects a fault, it triggers automatic DC disconnection protection. Do not turn on the DC switches before the fault is rectified.
- If the AC switch between the inverter and the power grid has been turned off automatically, do not turn it on before the fault is rectified.
- Before power-off for maintenance, do not touch the energized components of the inverter. Otherwise, electric shocks or arcs may occur.

Procedure

Step 1 Wear proper PPE.

Step 2 If the inverter does not shut down due to a fault, send a shutdown command on the app, SmartLogger, or management system. If the inverter has shut down due to a fault, go to the next step.

Step 3 Turn off the AC switch between the inverter and the power grid.

Step 4 Use a clamp meter to measure the DC current of each PV string input to the inverter.

- If PV strings have no current, go to the next step.
- If a PV string has current, wait until the solar irradiance decreases and the PV string has no current at night, and then go to the next step.

 Copyright © Huawei Technologies Co., Ltd.

Step 5 Open the maintenance compartment door, install a support strut, and use a multimeter to check the voltage between the AC terminal block and the ground. Ensure that the AC side of the inverter is powered off.

Step 6 Set all DC switches of the inverter to **OFF**. If the DC switches are automatically turned off, go to the next step.

Step 7 Wait for 15 minutes and troubleshoot or repair the inverter.

WARNING

- Do not open the panel for maintenance if the inverter is emitting abnormal smell or smoke, or has obvious exceptions.
- If the inverter does not emit abnormal smell or smoke and is intact, repair or restart it based on the alarm handling suggestions. Do not stand in front of the inverter during the restart.

Figure 8-1 Power-off for maintenance

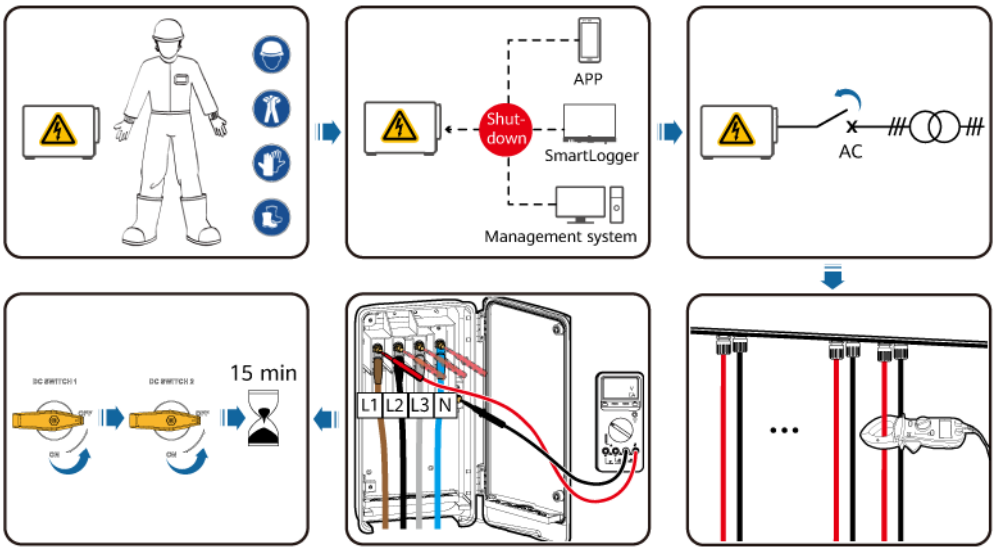

----End

8.4 Replacing a Fan

CAUTION

- Before replacing a fan, power off the inverter.
- When replacing a fan, use insulated tools and wear PPE.

NOTE

If the fan gets stuck when being pulled or pushed, slightly lift it.

Step 1 Remove the screws from the fan tray and store them properly. Pull out the fan tray until the fan tray is flush with the inverter enclosure.

Figure 8-2 Pulling out the fan tray (1)

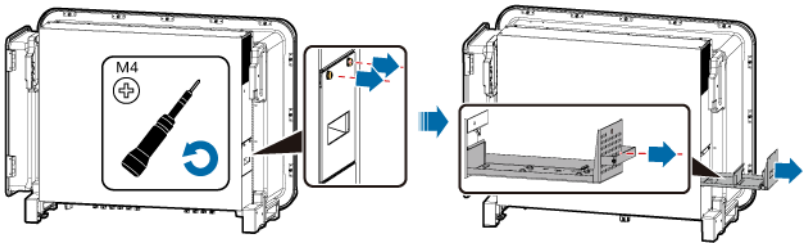

Step 2 Remove the cable ties shared by the cables, unscrew the connectors, and disconnect the cables.

Figure 8-3 Disconnecting cables

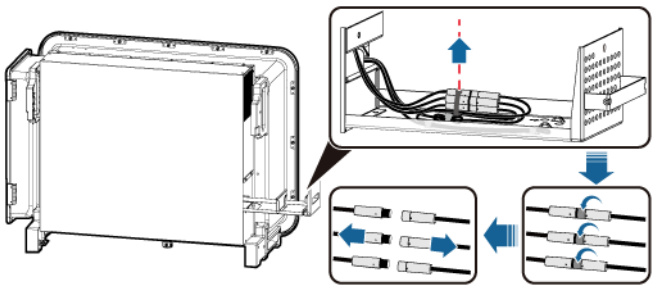

Step 3 Pull out the fan tray.

Figure 8-4 Pulling out the fan tray (2)

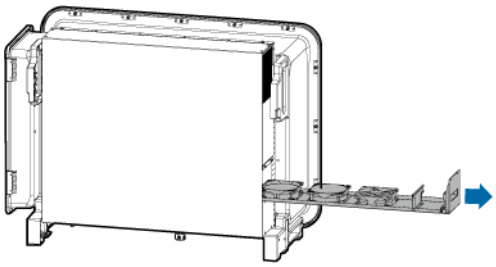

Step 4 Remove the cable ties from the faulty fan.

- FAN 1 is faulty.

Figure 8-5 Removing cable ties from FAN 1

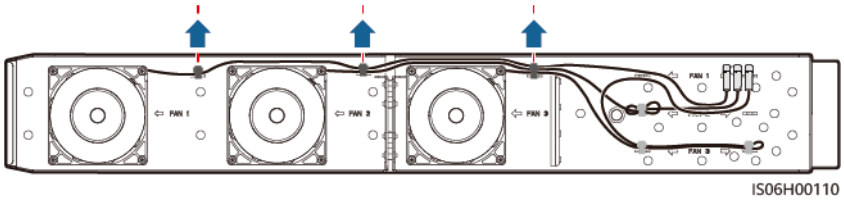

- FAN 2 is faulty.

Figure 8-6 Removing cable ties from FAN 2

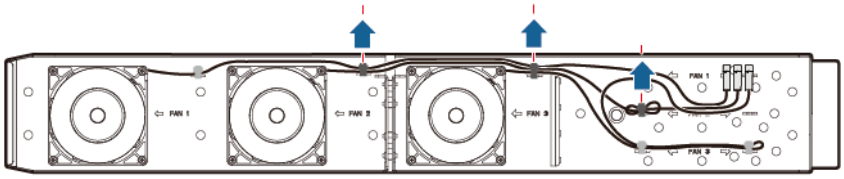

- FAN 3 is faulty.

Figure 8-7 Removing cable ties from FAN 3

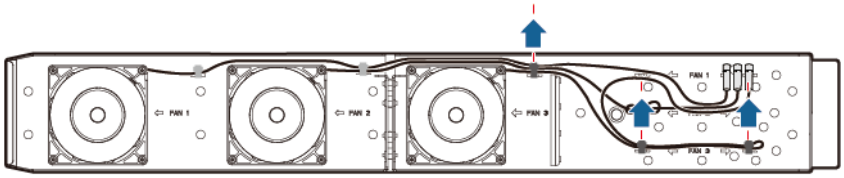

Step 5 Remove the faulty fan (FAN 1 is used as an example).

Figure 8-8 Removing a fan

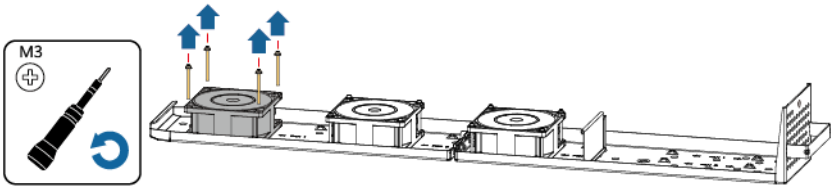

Step 6 Install a new fan (FAN 1 is used as an example).

Figure 8-9 Installing a fan

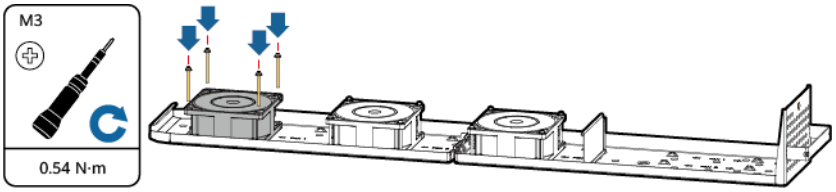

Step 7 Bind the fan cables.

- Binding positions for FAN 1

Figure 8-10 Binding the cables of FAN 1

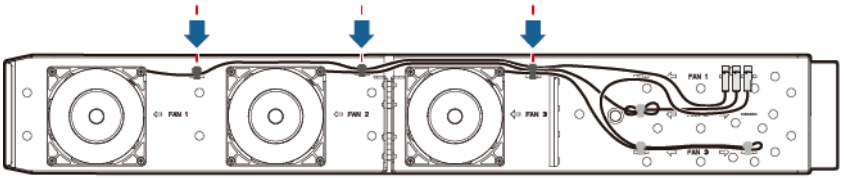

- Binding positions for FAN 2

Figure 8-11 Binding the cables of FAN 2

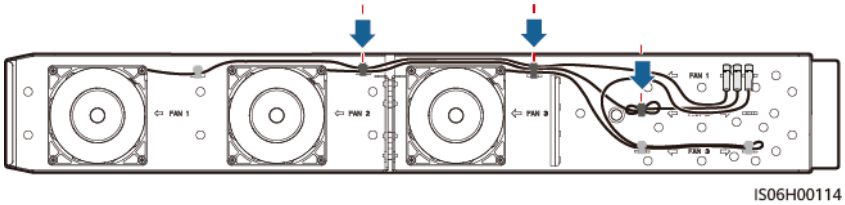

- Binding positions for FAN 3

Figure 8-12 Binding the cables of FAN 3

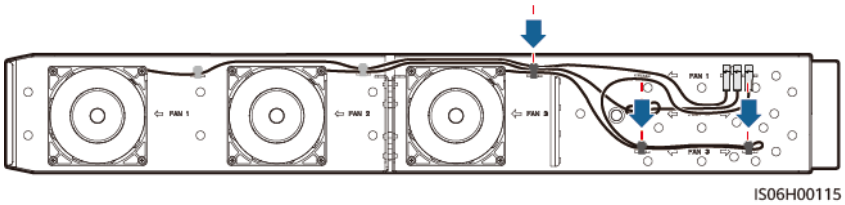

Step 8 Push in the fan tray until the fan baffle plate is flush with the inverter enclosure.

Figure 8-13 Pushing in the fan tray

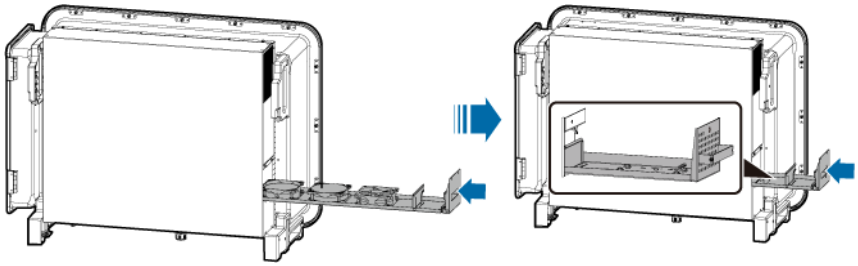

Step 9 Connect the cables correctly according to the cable labels and bind the cables.

Figure 8-14 Binding cables

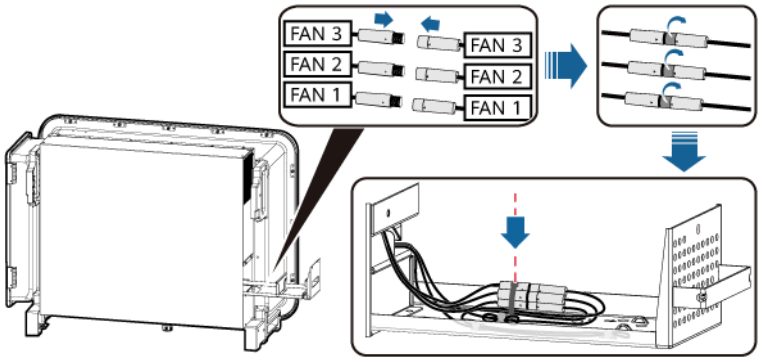

Step 10 Push in the fan tray completely and tighten the screws.

Figure 8-15 Reinstalling the fan tray

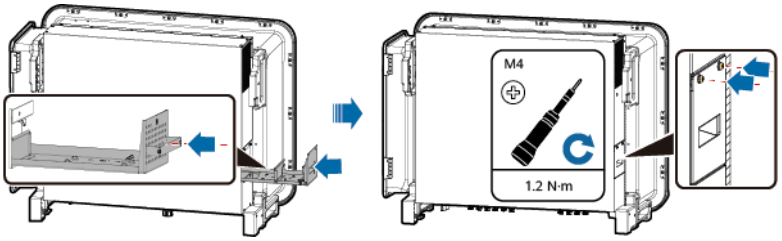

----End

8.5 Resetting and Turning On the DC Switch

Prerequisites

If string backfeed, string connection in reverse polarity, or internal inverter fault is displayed on the mobile app or remote monitoring system and the DC switch is in the **TRIP** position, the DC switch has been automatically turned off. In this case, rectify the fault based on the alarm handling suggestions before turning on the DC switch.

Procedure

Step 1 Set the DC switch to **OFF**.

Step 2 Set the DC switch to **ON**.

----End

8.6 Locating Insulation Resistance Faults

If the ground resistance of a PV string connected to the inverter is too low, the inverter generates a **Low insulation resistance** alarm.

The possible causes are as follows:

- A short circuit occurs between the PV array and the ground.
- The ambient air of the PV array is damp and the insulation between the PV array and the ground is poor.

After the **Low insulation resistance** alarm is generated, the inverter automatically triggers insulation resistance fault location. If the fault location is successful, the location information is displayed on the **Alarm Details** screen of the **Low insulation resistance** alarm on the FusionSolar app.

Log in to the FusionSolar app, choose **Alarm** > **Active alarm**, and choose **Low insulation resistance** to enter the **Alarm Details** screen.

 Copyright © Huawei Technologies Co., Ltd.

NOTE

- The positive and negative terminals of a PV string are connected to the PV+ and PV– terminals of the inverter, respectively. The 0% position corresponds to the PV– terminal, and the 100% position corresponds to the PV+ terminal. Other percentages indicate that the fault occurs on a PV module or cable in the PV string.
- Possible fault position = Total number of PV modules in a PV string x Percentage of possible short-circuit positions. For example, if a PV string consists of 14 PV modules and the percentage of the possible short-circuit position is 34%, the possible fault position is 4.76 (14 x 34%), indicating that the fault is located near PV module 4, including the adjacent PV modules and their cables. The inverter has a detection precision of ±1 PV module.
- For details about the PV strings corresponding to the MPPT that may be faulty, see **Table 8-2**. The fault can be located only to the MPPT level. Perform the following steps to connect the PV strings corresponding to the faulty MPPT to the inverter one by one to further locate and rectify the fault.
- When a non-short-circuit fault occurs, the possible short-circuit percentage is not displayed. If the insulation resistance is greater than 0.001 MΩ, the fault is not related to short circuit. Check all PV modules in the faulty PV string one by one to locate and rectify the fault.

Figure 8-16 Definition of the percentage of the short-circuit position

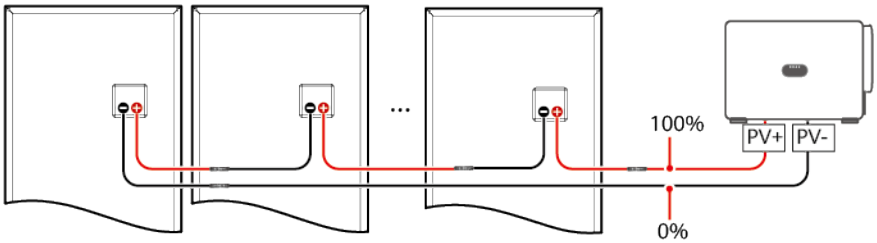

Table 8-2 Mapping between MPPTs and PV strings

MPPTn	PV String	MPPTn	PV String
MPPT1	PV1 to PV3	MPPT2	PV4 to PV6
MPPT3	PV7 to PV9	MPPT4	PV10 to PV12
MPPT5	PV13 to PV15	MPPT6	PV16 to PV18
MPPT7	PV19 to PV21	-	-

 Copyright © Huawei Technologies Co., Ltd.

Procedure

NOTICE

- In SUN2000MG V600R023C10SPC101 and later versions, insulation resistance detection upon shutdown is supported. If the AC side is not powered on, insulation resistance fault locating is not supported.
- If the irradiance is too strong, the PV string voltage is too high, or only the DC side is powered on but the AC side is not powered on, the insulation resistance fault locating may fail. In this case, the fault locating status on the **Alarm Details** screen is **Conditions not met**. Check the PV string voltage on the app, SmartLogger, or the management system. If the voltage is within the normal range, perform the following steps to connect PV strings to the inverter one by one to locate the fault.

Step 1 Ensure that the AC connections are normal. Log in to the FusionSolar app, choose **Maintenance** > **Inverter ON/OFF** on the home screen, and send a shutdown command. Set the **DC SWITCH** of the inverter to **OFF**.

Step 2 Connect a PV string to the inverter and set the **DC SWITCH** to **ON**. If the inverter status is **Shutdown: Command**, choose **Maintenance** > **Inverter ON/OFF** on the home screen and send a startup command.

Step 3 Choose **Alarm** on the home screen, enter the **Active alarm** screen, and check whether a **Low insulation resistance** alarm is reported.

- If no **Low insulation resistance** alarm is reported 1 minute after the DC side is powered on, choose **Maintenance** > **Inverter ON/OFF** on the home screen and send a shutdown command. Set the **DC SWITCH** to **OFF**. Go to **Step 2** and check the other PV strings one by one.
- If the **Low insulation resistance** alarm is reported 1 minute after the DC side is powered on, check the percentage of possible short-circuit positions on the **Alarm Details** screen and calculate the location of the possibly faulty PV module based on the percentage. Then go to **Step 4**.

Step 4 Choose **Maintenance** > **Inverter ON/OFF** on the home screen and send a shutdown command. Set the **DC SWITCH** to **OFF**. Check whether the connectors or DC power cables between the possibly faulty PV modules and adjacent PV modules are damaged.

- If yes, replace the damaged connectors or DC power cables and then set the **DC SWITCH** to **ON**. If the inverter status is **Shutdown: Command**, choose **Maintenance** > **Inverter ON/OFF** on the home screen and send a startup command. View alarm information.
  - If no **Low insulation resistance** alarm is reported 1 minute after the DC side is powered on, the insulation resistance fault location of the PV string is complete. Choose **Maintenance** > **Inverter ON/OFF** on the home screen and send a shutdown command. Set the **DC SWITCH** to **OFF**. Go to **Step 2** and check the other PV strings one by one. Then, go to **Step 7**.
  - If the **Low insulation resistance** alarm is still reported 1 minute after the DC side is powered on, choose **Maintenance** > **Inverter ON/OFF** on the

 Copyright © Huawei Technologies Co., Ltd.

home screen and send a shutdown command. Set the **DC SWITCH** to **OFF** and go to **Step 5**.

- If no, go to **Step 5**.

Step 5 Disconnect the possibly faulty PV module from the PV string, and use a DC extension cable with MC4 connectors to connect the adjacent PV modules. Set the **DC SWITCH** to **ON**. If the inverter status is **Shutdown: Command**, choose **Maintenance** > **Inverter ON/OFF** on the home screen and send a startup command. View alarm information.

- If no **Low insulation resistance** alarm is reported 1 minute after the DC side is powered on, the fault occurred on the disconnected PV module. Choose **Maintenance** > **Inverter ON/OFF** on the home screen, send a shutdown command, and set the **DC SWITCH** to **OFF**. Go to **Step 7**.
- If the **Low insulation resistance** alarm is still reported 1 minute after the DC side is powered on, the fault did not occur on the disconnected PV module. Go to **Step 6**.

Step 6 Choose **Maintenance** > **Inverter ON/OFF** on the home screen and send a shutdown command. Set the **DC SWITCH** to **OFF**, reconnect the disconnected PV module, and repeat **Step 5** to check the adjacent PV modules at the possible fault position.

Step 7 Set the **DC SWITCH** to **ON**. If the inverter status is **Shutdown: Command**, choose **Maintenance** > **Inverter ON/OFF** on the home screen and send a startup command.

----End

 Copyright © Huawei Technologies Co., Ltd.

9 Alarm Reference

For details about alarms, see **Inverter Alarm Reference**.

 Copyright © Huawei Technologies Co., Ltd.

10 Technical Specifications

Efficiency

Item	SUN2000-150K-MG0-ZH	SUN2000-150K-MG0
Maximum efficiency	≥ 98.6% (380 V), ≥ 98.8% (480 V)	≥ 98.6% (380 V/400 V), ≥ 98.8% (480 V)
Efficiency in China	≥ 98.2% (380 V), ≥ 98.4% (480 V)	/
Efficiency in Europe	/	≥ 98.3% (380 V), ≥ 98.4% (400 V), ≥ 98.60% (480 V)

Input

Item	SUN2000-150K-MG0-ZH	SUN2000-150K-MG0
Maximum input voltage[a]	1100 V	1100 V
Operating voltage range[b]	200–1000 V	200–1000 V
Minimum startup voltage	200 V	200 V
Full-load MPPT voltage range[c]	540–800 V (380 V) 625–850 V (480 V)	540–800 V (380 V/400 V) 625–850 V (480 V)
Rated input voltage	600 V (380 V), 720 V (480 V)	600 V (380 V/400 V), 720 V (480 V)
Maximum input current (per MPPT)	48 A	48 A
Maximum input current (per PV string)	23 A	23 A

 Copyright © Huawei Technologies Co., Ltd.

Item	SUN2000-150K-MG0-ZH	SUN2000-150K-MG0
Maximum short-circuit current (per MPPT)	66 A	66 A
Number of inputs	21	21
Number of MPPTs	7	7
Note a: The maximum input voltage is the maximum DC input voltage that the inverter can withstand. If the input voltage exceeds this value, the inverter may be damaged. Note b: If the input voltage is beyond the operating voltage range, the inverter cannot work properly. Note c: The PV strings connecting to the same MPPT circuit shall use the same model and quantity of PV modules. It is recommended that the PV string voltage be higher than the lower threshold of the full-load MPPT voltage.		

Output

Item	SUN2000-150K-MG0-ZH	SUN2000-150K-MG0
Rated output power	150 kW	150 kW
Maximum apparent power	165 kVA	165 kVA
Maximum active power (cosϕ = 1)	165 kW	165 kW
Rated output voltage[a]	Phase voltage/Line voltage: 220/380 V, 277/480 V 3W + (N)[b] + PE	Phase voltage/Line voltage: 220 V/380 V, 230 V/400 V, 277 V/480 V 3W + (N)[b] + PE
Rated output current	227.9 A (380 V) 180.4 A (480 V)	227.9 A (380 V) 216.5 A (400 V) 180.4 A (480 V)
Adapted power grid frequency	50 Hz/60 Hz	50 Hz/60 Hz
Maximum output current	253.2 A (380 V) 200.5 A (480 V)	253.2 A (380 V) 240.5 A (400 V) 200.5 A (480 V)
Power factor	0.8 leading to 0.8 lagging	0.8 leading to 0.8 lagging
Maximum total harmonic distortion (rated power)	< 1% (rated working conditions)	< 1% (rated working conditions)

 Copyright © Huawei Technologies Co., Ltd.

Item	SUN2000-150K-MG0-ZH	SUN2000-150K-MG0
Output DC component (DCI)	< 0.5% of the rated current	< 0.5% of the rated current
Note a: The rated output voltage is determined by **Grid code**, and **Grid code** can be set on the SUN2000 app, SmartLogger, or management system. Note b: You can determine whether to connect the N wire to the SUN2000 based on the application scenario. In scenarios without N wires, set **Output mode** to **Three-phase, three-wire**. In scenarios with N wires, set **Output mode** to **Three-phase, four-wire**.		

Protection

Item	SUN2000-150K-MG0-ZH	SUN2000-150K-MG0
Arc-fault circuit interrupter (AFCI)	Supported[a]	Supported
Built-in PID recovery	Supported[b]	Supported
Input DC switch	Supported	Supported
Anti-islanding protection	Supported	Supported
Output overcurrent protection	Supported	Supported
Input reverse connection protection	Supported	Supported
PV string fault detection	Supported	Supported
DC surge protection	Supported	Supported
AC surge protection	Supported	Supported
Insulation resistance detection	Supported	Supported
Residual current monitoring unit (RCMU)	Supported	Supported
Overvoltage category	PV II/AC III	PV II/AC III
Note a: The inverter with the part number 01076909 does not support arc fault protection. Note b: The inverter with the part number 01076909 does not support built-in PID recovery.		

 Copyright © Huawei Technologies Co., Ltd.

Display and Communication

Item	SUN2000-150K-MG0-ZH	SUN2000-150K-MG0
Display	LED indicator; WLAN module + app; USB data cable + app	LED indicator; WLAN module + app; USB data cable + app
RS485	Supported	Supported
AC MBUS	Supported[a]	Supported
Optimizer	Not supported	Not supported
Note a: The inverter with the part number 01076909 does not support AC MBUS.		

General Specifications

Item	SUN2000-150K-MG0-ZH	SUN2000-150K-MG0
Dimensions (W x H x D)	1000 mm x 710 mm x 395 mm	1000 mm x 710 mm x 395 mm
Net weight (including hanging kits)	98 kg	98 kg
Operating temperature	–25°C to +60°C	–25°C to +60°C
Cooling mode	Smart air cooling	Smart air cooling
Operating altitude	0–5000 m (derated when the altitude exceeds 4000 m)	0–5000 m (derated when the altitude exceeds 4000 m)
Relative humidity	0%–100% RH	0%–100% RH
Input and output terminals	DC input terminals: CT75A-1T-34/CT75A-1T-35 (AVIC JONHON) AC output terminals: waterproof terminal + OT/DT terminal	DC input terminals: HH4SFD4TMS/HH4SMD4TMS (Amphenol) AC output terminals: waterproof terminal + OT/DT terminal
IP rating	IP66	IP66
Topology	Transformerless	Transformerless

 Copyright © Huawei Technologies Co., Ltd.

A Grid Codes

No.	Grid Code	Description (Country/ Region/ Standard/ Others)	SUN2000-150K -MG0-ZH	SUN2000-150K -MG0
1	NB/T 32004	China low-voltage power grid	Supported	Supported
2	Custom (50Hz)	Reserved	Supported	Supported
3	Custom (60Hz)	Reserved	Supported	Supported
4	CHINA-MV480	China medium-voltage standard power grid	Supported	-
5	CHINA-MV	China medium-voltage standard power grid	Supported	Supported
6	Fuel-Engine-Grid	Genset hybrid power grid	Supported	Supported
7	Fuel-Engine-Grid-60Hz	Genset hybrid power grid	Supported	Supported
8	VDE-AR-N-4105	Germany low-voltage power grid	-	Supported
9	UTE C 15-712-1(A)	France mainland power grid	-	Supported

 Copyright © Huawei Technologies Co., Ltd.

No.	Grid Code	Description (Country/ Region/ Standard/ Others)	SUN2000-150K -MG0-ZH	SUN2000-150K -MG0
10	UTE C 15-712-1(B)	France island power grid	-	Supported
11	UTE C 15-712-1(C)	France island power grid	-	Supported
12	VDE 0126-1-1-BU	Bulgaria power grid	-	Supported
13	VDE 0126-1-1-GR(A)	Greece mainland power grid	-	Supported
14	VDE 0126-1-1-GR(B)	Greece island power grid	-	Supported
15	BDEW-MV	Germany medium-voltage power grid	-	Supported
16	G59-England	England 230 V power grid (I > 16 A)	-	Supported
17	G59-Scotland	Scotland 240 V power grid (I > 16 A)	-	Supported
18	G83-England	England 230 V power grid (I < 16 A)	-	Supported
19	G83-Scotland	Scotland 240 V power grid (I < 16 A)	-	Supported
20	CEI0-21	Italy power grid	-	Supported
21	EN50438-CZ	Czech Republic power grid	-	Supported
22	RD1699/661	Spain low-voltage power grid	-	Supported
23	RD1699/661-MV480	Spain medium-voltage power grid	-	Supported

 Copyright © Huawei Technologies Co., Ltd.

No.	Grid Code	Description (Country/ Region/ Standard/ Others)	SUN2000-150K -MG0-ZH	SUN2000-150K -MG0
24	EN50438-NL	Netherlands power grid	-	Supported
25	C10/11	Belgium power grid	-	Supported
26	AS4777	Australia power grid	-	Supported
27	IEC61727	IEC 61727 low-voltage grid-connection (50 Hz)	-	Supported
28	CEI0-16	Italy power grid	-	Supported
29	TAI-PEA	Thailand grid-connection standard	-	Supported
30	TAI-MEA	Thailand grid-connection standard	-	Supported
31	BDEW-MV480	Germany medium-voltage standard power grid	-	Supported
32	Custom-MV480(50Hz)	Reserved	-	Supported
33	Custom-MV480(60Hz)	Reserved	-	Supported
34	G59-England-MV480	UK 480 V medium-voltage grid connection (I > 16 A)	-	Supported
35	IEC61727-MV480	IEC 61727 medium-voltage grid-connection (50 Hz)	-	Supported
36	UTE C 15-712-1-MV480	France island power grid	-	Supported

 Copyright © Huawei Technologies Co., Ltd.

No.	Grid Code	Description (Country/ Region/ Standard/ Others)	SUN2000-150K -MG0-ZH	SUN2000-150K -MG0
37	TAI-PEA-MV480	Thailand medium-voltage grid-connection (PEA)	-	Supported
38	TAI-MEA-MV480	Thailand medium-voltage grid-connection (MEA)	-	Supported
39	EN50438-DK-MV480	Denmark medium-voltage grid-connection	-	Supported
40	EN50438-TR-MV480	Türkiye medium-voltage power grid	-	Supported
41	EN50438-TR	Türkiye low-voltage power grid	-	Supported
42	C11/C10-MV480	Belgium medium-voltage power grid	-	Supported
43	Philippines	Philippines low-voltage power grid	-	Supported
44	Philippines-MV480	Philippines medium-voltage power grid	-	Supported
45	AS4777-MV480	Australia medium-voltage power grid	-	Supported
46	NRS-097-2-1	South Africa standard power grid	-	Supported

 Copyright © Huawei Technologies Co., Ltd.

No.	Grid Code	Description (Country/ Region/ Standard/ Others)	SUN2000-150K -MG0-ZH	SUN2000-150K -MG0
47	NRS-097-2-1-MV480	South Africa medium-voltage standard power grid	-	Supported
48	KOREA	South Korea power grid	-	Supported
49	IEC61727-60Hz	IEC 61727 low-voltage grid-connection (60 Hz)	-	Supported
50	IEC61727-60Hz-MV480	IEC 61727 medium-voltage grid-connection (60 Hz)	-	Supported
51	ANRE	Romania low-voltage power grid	-	Supported
52	ANRE-MV480	Romania medium-voltage power grid	-	Supported
53	PO12.3-MV480	Spain medium-voltage power grid	-	Supported
54	EN50438_IE-MV480	Ireland medium-voltage power grid	-	Supported
55	EN50438_IE	Ireland low-voltage power grid	-	Supported
56	CEI0-16-MV480	Italy medium-voltage power grid	-	Supported
57	PO12.3	Spain low-voltage power grid	-	Supported

 Copyright © Huawei Technologies Co., Ltd.

No.	Grid Code	Description (Country/ Region/ Standard/ Others)	SUN2000-150K -MG0-ZH	SUN2000-150K -MG0
58	CEI0-21-MV480	Italy medium-voltage power grid	-	Supported
59	KOREA-MV480	South Korea medium-voltage power grid	-	Supported
60	Egypt ETEC	Egypt low-voltage power grid	-	Supported
61	Egypt ETEC-MV480	Egypt medium-voltage power grid	-	Supported
62	EN50549-LV	Ireland power grid	-	Supported
63	EN50549-MV480	Ireland medium-voltage power grid	-	Supported
64	Jordan-Transmission	Jordan low-voltage power grid	-	Supported
65	Jordan-Transmission-MV480	Jordan medium-voltage power grid	-	Supported
66	NAMIBIA	Namibia power grid	-	Supported
67	ABNT NBR 16149	Brazil power grid	-	Supported
68	ABNT NBR 16149-MV480	Brazil medium-voltage power grid	-	Supported
69	SA_RPPs	South Africa low-voltage power grid	-	Supported

 Copyright © Huawei Technologies Co., Ltd.

No.	Grid Code	Description (Country/ Region/ Standard/ Others)	SUN2000-150K -MG0-ZH	SUN2000-150K -MG0
70	SA_RPPs-MV480	South Africa medium-voltage power grid	-	Supported
71	ZAMBIA	Zambia low-voltage power grid	-	Supported
72	ZAMBIA-MV480	Zambia medium-voltage power grid	-	Supported
73	Chile	Chile low-voltage power grid	-	Supported
74	Chile-MV480	Chile medium-voltage power grid	-	Supported
75	Mexico-MV480	Mexico medium-voltage power grid	-	Supported
76	Malaysian	Malaysia low-voltage power grid	-	Supported
77	Malaysian-MV480	Malaysia medium-voltage power grid	-	Supported
78	KENYA_ETHIOPIA	Kenya low-voltage power grid and Ethiopia power grid	-	Supported
79	KENYA_ETHIOPIA-MV480	Kenya low-voltage power grid and Ethiopia medium-voltage power grid	-	Supported

 Copyright © Huawei Technologies Co., Ltd.

No.	Grid Code	Description (Country/ Region/ Standard/ Others)	SUN2000-150K -MG0-ZH	SUN2000-150K -MG0
80	NIGERIA	Nigeria low-voltage power grid	-	Supported
81	NIGERIA-MV480	Nigeria medium-voltage power grid	-	Supported
82	DUBAI	Dubai low-voltage power grid	-	Supported
83	DUBAI-MV480	Dubai medium-voltage power grid	-	Supported
84	Northern Ireland	Northern Ireland low-voltage power grid	-	Supported
85	Northern Ireland-MV480	Northern Ireland medium-voltage power grid	-	Supported
86	Cameroon	Cameroon low-voltage power grid	-	Supported
87	Cameroon-MV480	Cameroon medium-voltage power grid	-	Supported
88	Jordan-Distribution	Jordan power distribution network low-voltage power grid	-	Supported
89	Jordan-Distribution-MV480	Jordan power distribution network medium-voltage power grid	-	Supported

 Copyright © Huawei Technologies Co., Ltd.

No.	Grid Code	Description (Country/ Region/ Standard/ Others)	SUN2000-150K -MG0-ZH	SUN2000-150K -MG0
90	NAMIBIA_MV480	Namibia power grid	-	Supported
91	LEBANON	Lebanon low-voltage power grid	-	Supported
92	LEBANON-MV480	Lebanon medium-voltage power grid	-	Supported
93	ARGENTINA-MV500	Argentina medium-voltage power grid	-	Supported
94	Jordan-Transmission-HV	Jordan high-voltage power grid	-	Supported
95	Jordan-Transmission-HV480	Jordan high-voltage power grid	-	Supported
96	TUNISIA	Tunisia power grid	-	Supported
97	TUNISIA-MV480	Tunisia medium-voltage power grid	-	Supported
98	AUSTRALIA-NER	Australia NER standard power grid	-	Supported
99	AUSTRALIA-NER-MV480	Australia NER standard power grid	-	Supported
100	SAUDI	Saudi Arabia power grid	-	Supported
101	SAUDI-MV480	Saudi Arabia power grid	-	Supported
102	Ghana-MV480	Ghana medium-voltage power grid	-	Supported

 Copyright © Huawei Technologies Co., Ltd.

No.	Grid Code	Description (Country/ Region/ Standard/ Others)	SUN2000-150K -MG0-ZH	SUN2000-150K -MG0
103	Israel	Israel power grid	-	Supported
104	Israel-MV480	Israel power grid	-	Supported
105	Chile-PMGD	Chile PMGD power grid	-	Supported
106	Chile-PMGD-MV480	Chile PMGD power grid	-	Supported
107	VDE-AR-N4120-HV	VDE 4120 standard power grid	-	Supported
108	VDE-AR-N4120-HV480	VDE 4120 standard power grid	-	Supported
109	Vietnam	Vietnam power grid	-	Supported
110	Vietnam-MV480	Vietnam power grid	-	Supported
111	TAIPOWER	Taiwan Power low-voltage power grid	-	Supported
112	TAIPOWER-MV480	Taiwan Power medium-voltage power grid (480 V)	-	Supported
113	ARGENTINA-MV480	Argentina medium-voltage power grid	-	Supported
114	OMAN	Oman low-voltage power grid	-	Supported
115	OMAN-MV480	Oman medium-voltage power grid	-	Supported

 Copyright © Huawei Technologies Co., Ltd.

No.	Grid Code	Description (Country/ Region/ Standard/ Others)	SUN2000-150K -MG0-ZH	SUN2000-150K -MG0
116	KUWAIT	Kuwait low-voltage power grid	-	Supported
117	KUWAIT-MV480	Kuwait medium-voltage power grid	-	Supported
118	BANGLADESH	Bangladesh low-voltage power grid	-	Supported
119	BANGLADESH-MV480	Bangladesh medium-voltage power grid	-	Supported
120	Chile-Net_Billing	Chile Net Billing power grid	-	Supported
121	EN50438-NL-MV480	Netherlands medium-voltage power grid	-	Supported
122	BAHRAIN	Bahrain low-voltage power grid	-	Supported
123	BAHRAIN-MV480	Bahrain medium-voltage power grid	-	Supported
124	ARGENTINA	Argentina power grid	-	Supported
125	Mauritius	Mauritius power grid	-	Supported
126	Mauritius-MV480	Mauritius medium-voltage power grid	-	Supported
127	EN50438-SE	Sweden low-voltage power grid	-	Supported

 Copyright © Huawei Technologies Co., Ltd.

No.	Grid Code	Description (Country/ Region/ Standard/ Others)	SUN2000-150K -MG0-ZH	SUN2000-150K -MG0
128	Pakistan	Pakistan power grid	-	Supported
129	Pakistan-MV480	Pakistan medium-voltage power grid	-	Supported
130	Austria	Austria power grid	-	Supported
131	Austria-MV480	Austria medium-voltage power grid	-	Supported
132	G99-TYPEA-LV	UK G99-TYPEA-LV power grid	-	Supported
133	G99-TYPEB-LV	UK G99-TYPEB-LV power grid	-	Supported
134	G99-TYPEB-HV	UK G99-TYPEB-HV power grid	-	Supported
135	G99-TYPEB-HV-MV480	UK G99-TYPEB-HV medium-voltage power grid	-	Supported
136	G99-TYPEA-HV	UK G99-TYPEA-HV power grid	-	Supported
137	EN50549-MV400	Ireland new standard power grid	-	Supported
138	VDE-AR-N4110	Germany medium-voltage power grid (230 V)	-	Supported
139	VDE-AR-N4110-MV480	Germany medium-voltage standard power grid	-	Supported
140	NTS	Spain power grid	-	Supported

 Copyright © Huawei Technologies Co., Ltd.

No.	Grid Code	Description (Country/ Region/ Standard/ Others)	SUN2000-150K -MG0-ZH	SUN2000-150K -MG0
141	NTS-MV480	Spain medium-voltage power grid	-	Supported
142	SINGAPORE	Singapore low-voltage power grid	-	Supported
143	SINGAPORE-MV480	Singapore medium-voltage power grid	-	Supported
144	HONGKONG	Hong Kong low-voltage power grid	-	Supported
145	HONGKONG-MV480	Hong Kong medium-voltage power grid	-	Supported
146	C10/11-MV400	Belgium medium-voltage power grid	-	Supported
147	Cambodia	Cambodia power grid	-	Supported
148	Cambodia-MV480	Cambodia medium-voltage power grid	-	Supported
149	EN50549-SE	Sweden low-voltage power grid	-	Supported
150	GREG030	Colombia low-voltage power grid	-	Supported
151	GREG030-MV440	Colombia medium-voltage power grid	-	Supported

 Copyright © Huawei Technologies Co., Ltd.

No.	Grid Code	Description (Country/ Region/ Standard/ Others)	SUN2000-150K -MG0-ZH	SUN2000-150K -MG0
152	GREG030-MV480	Colombia medium-voltage power grid	-	Supported
153	PORTUGAL	Portugal low-voltage power grid	-	Supported
154	PORTUGAL-MV480	Portugal medium-voltage power grid	-	Supported
155	AS4777_ACT	Australia power grid	-	Supported
156	AS4777_NSW_ESS	Australia power grid	-	Supported
157	AS4777_NSW_AG	Australia power grid	-	Supported
158	AS4777_QLD	Australia power grid	-	Supported
159	AS4777_SA	Australia power grid	-	Supported
160	AS4777_VIC	Australia power grid	-	Supported
161	EN50549-PL	Poland power grid	-	Supported
162	DANMARK-EN50549-DK1-LV230	Denmark power grid	-	Supported
163	DANMARK-EN50549-DK2-LV230	Denmark power grid	-	Supported
164	AUSTRALIA-AS4777_A-LV230	Australia power grid	-	Supported
165	AUSTRALIA-AS4777_B-LV230	Australia power grid	-	Supported
166	AUSTRALIA-AS4777_C-LV230	Australia power grid	-	Supported

 Copyright © Huawei Technologies Co., Ltd.

No.	Grid Code	Description (Country/ Region/ Standard/ Others)	SUN2000-150K -MG0-ZH	SUN2000-150K -MG0
167	AUSTRALIA-AS4777_NZ-LV230	Australia power grid	-	Supported
168	INVALID GRID CODE	Invalid grid code	-	Supported
169	CZECH-EN50549-LV230	Czech Republic power grid	-	Supported
170	CZECH-EN50549-MV480	Czech Republic power grid	-	Supported
171	ISRAEL-MV400	Israel medium-voltage 400 V power grid	-	Supported
172	ANRE-TYPEB	Romania power grid (type B)	-	Supported
173	ANRE-TYPEB-MV480	Romania power grid (type B)	-	Supported
174	AUSTRIA-TYPEB-LV400	Austria power grid	-	Supported
175	AUSTRIA-TYPEB-LV480	Austria power grid	-	Supported
176	AUSTRIA-TYPEB-MV400	Austria power grid	-	Supported
177	AUSTRIA-TYPEB-MV480	Austria power grid	-	Supported

NOTE

The grid codes are subject to change. The listed codes are for reference only.

 Copyright © Huawei Technologies Co., Ltd.

B Resetting a Password

Step 1 Check that the AC and DC sides of the inverter are both powered on, and indicators and are steady green or blinking slowly for more than 3 minutes.

Step 2 Turn off the AC switch, set the DC SWITCH at the bottom of the inverter to OFF, and wait until all LED indicators on the inverter panel turn off.

Step 3 After the inverter is powered off, complete the following operations within 4 minutes:

1. Turn on the AC switch and wait for about 90s or until the inverter indicator blinks.
2. Turn off the AC switch and wait about 30s or until all LED indicators on the inverter panel turn off.
3. Turn on the AC switch and wait for about 90s or until the inverter indicator blinks.

Step 4 Log in to the app and reset the password within 10 minutes. (If no operation is performed within 10 minutes, all parameters of the inverter remain unchanged.)

----End

NOTICE

You are advised to reset the password in the morning or at night when the solar irradiance is low.

 Copyright © Huawei Technologies Co., Ltd.

C Crimping an OT or DT Terminal

Requirements for the OT or DT Terminal

- If a copper cable is used, use copper wiring terminals.
- If a copper-clad aluminum cable is used, use copper wiring terminals.
- If an aluminum alloy cable is used, use copper-aluminum transition wiring terminals, or aluminum wiring terminals along with copper-aluminum transition spacers.

NOTICE

- Do not connect aluminum wiring terminals to the AC terminal block. Otherwise the electrochemical corrosion will occur and affect the reliability of cable connections.
- Comply with the IEC61238-1 requirements when using copper-aluminum transition wiring terminals, or aluminum wiring terminals along with copper-aluminum transition spacers.
- If copper-aluminum transition spacers are used, pay attention to the front and rear sides. Ensure that the aluminum sides of spacers are in contact with aluminum wiring terminals, and copper sides of spacers are in contact with the AC terminal block.

Copyright © Huawei Technologies Co., Ltd.

Figure C-1 Requirements for the OT/DT terminal

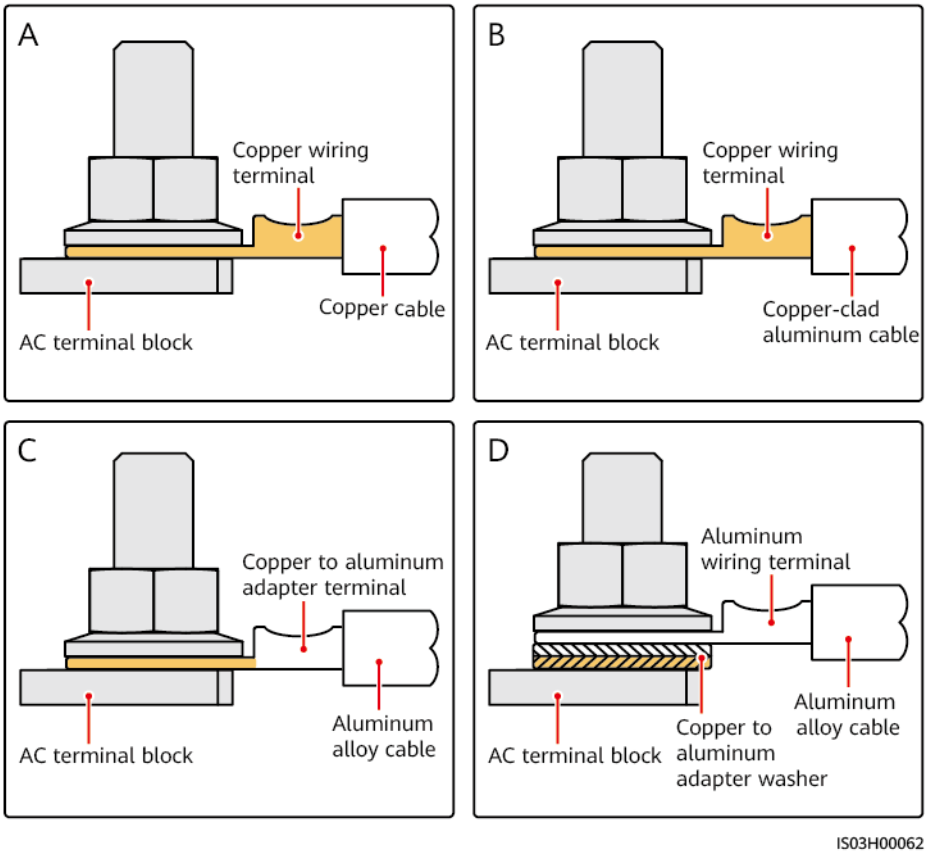

Crimping an OT or DT Terminal

NOTICE

- Pay attention not to scratch the core wire when stripping a cable.
- The cavity formed after the conductor crimp strip of the OT or DT terminal is crimped must wrap the core wires completely. The core wires must contact the OT or DT terminal closely.
- Wrap the wire crimping area with a heat shrink tubing or PVC insulation tape. The heat shrink tubing is used as an example.
- When using a heat gun, protect devices from being scorched.

 Copyright © Huawei Technologies Co., Ltd.

Figure C-2 Crimping an OT terminal

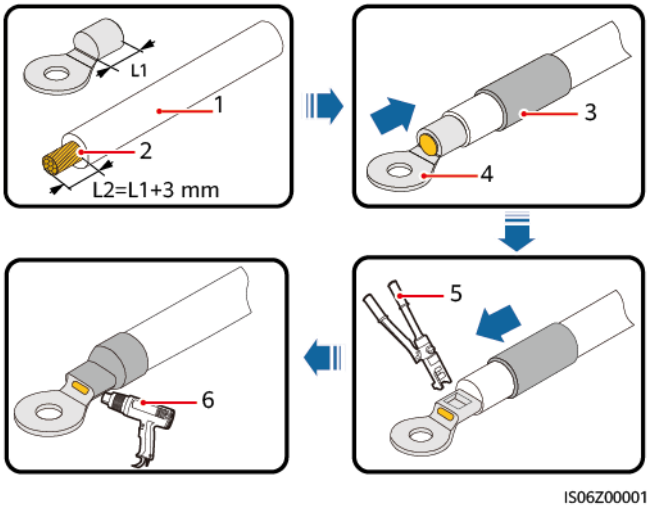

(1) Cable (2) Core (3) Heat shrink tubing

(4) OT terminal (5) Hydraulic pliers (6) Heat gun

Figure C-3 Crimping a DT terminal

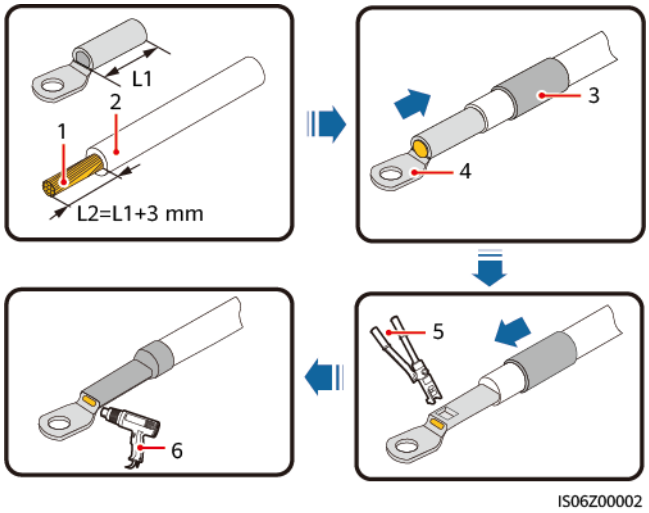

(1) Core (2) Cable (3) Heat shrink tubing

(4) DT terminal (5) Hydraulic pliers (6) Heat gun

 Copyright © Huawei Technologies Co., Ltd.

D Baud Rate Negotiation

Baud rate negotiation improves the communications rate between the inverter and Dongle, solving or relieving communication congestion.

- During device search in a new plant, the system automatically negotiates the baud rate.
- When replacing or adding an inverter or Smart Dongle at an existing plant, you need to manually deliver local commands on the FusionSolar app to reset the baud rate between devices and negotiate a higher rate.

NOTICE

Baud rate negotiation applies only to RS485 communication in which Dongle networking is used. The inverters networked must be the MG0 series.

Table D-1 Manual baud rate negotiation on the app

Networking Mode	Scenario	Operation
Smart Dongle networking	Replacing the Smart Dongle	1. Use the FusionSolar app to locally scan the QR code to connect to the Dongle. 2. Access the **Communication configuration** screen, choose **RS485** > **Baud Rate Negotiation**, and tap **9600** and **Negotiate a higher rate**.
	Replacing or adding an inverter	1. Use the FusionSolar app to locally scan the QR code to connect to the Dongle. 2. Access the **Communication configuration** screen, choose **RS485** > **Baud Rate Negotiation**, and tap **9600** and **Negotiate a higher rate**.

 Copyright © Huawei Technologies Co., Ltd.

Troubleshooting

If manual baud rate negotiation fails, refer to the following troubleshooting measures.

Table D-2 Troubleshooting measures

Scenario	Troubleshooting
Negotiation failed	1. Check whether the device cables are connected properly. If no, connect the device cables correctly. 2. Check whether service operations such as upgrade and log export are performed on the management system. If yes, perform baud rate negotiation again after such operations are complete. 3. Perform baud rate negotiation again. 4. When you replace or add an inverter, if you tap **Negotiate a higher rate** and a message "Negotiation failed. The southbound device does not support the rate." is displayed, it indicates that the device connected to the Dongle does not support baud rate negotiation. In this case, you only need to tap **9600**. 5. If the fault persists, contact your vendor.

 Copyright © Huawei Technologies Co., Ltd.

E Contact Information

If you have any questions about this product, please contact us.

https://digitalpower.huawei.com

Path: **About Us** > **Contact Us** > **Service Hotlines**

To ensure faster and better services, we kindly request your assistance in providing the following information:

- Model
- Serial number (SN)
- Software version
- Alarm ID or name
- Brief description of the fault symptom

 Copyright © Huawei Technologies Co., Ltd.

NOTE

EU Representative Information: Huawei Technologies Hungary Kft.
Add.: HU-1133 Budapest, Váci út 116-118., 1. Building, 6. floor.
Email: hungary.reception@huawei.com

 Copyright © Huawei Technologies Co., Ltd.

F Digital Power Customer Service

https://digitalpower.huawei.com/robotchat/

Copyright © Huawei Technologies Co., Ltd.

G Acronyms and Abbreviations

A

AFCI	arc-fault circuit interrupter

L

LED	light emitting diode

M

MBUS	monitoring bus
MPP	maximum power point
MPPT	maximum power point tracking

P

PID	potential induced degradation
PV	photovoltaic

R

 Copyright © Huawei Technologies Co., Ltd.

RCMU	residual current monitoring unit

 Copyright © Huawei Technologies Co., Ltd.