Manualslib.com - The Global Manuals Library

HUAWEI LUNA2000-213KTL-H0 USER MANUAL

Quick Links

Cabling Requirements
Product Description
Technical Specifications

Table of Contents

About This Document
Intended Audience
Symbol Conventions
Change History
Table of Contents
Safety Information
Personal Safety
General Requirements
Personnel Requirements
Electrical Safety
Cabling Requirements
Environment Requirements
Mechanical Safety
Using Ladders
Drilling Holes
Product Description
Model
Model Description
Networking Application
Earthing System
Appearance
Indicator Description
Circuit Diagram
Working Modes
Label Description
Storage Requirements
Installation
Installation Modes
Installation Requirements

Site Selection Requirements
Mounting Structure Requirements
Foundation Requirements
Clearance Requirements
Angle Requirements
Preparing Tools
Installation Tools
Personal Protective Equipment (Ppe)
Pre-installation Checks
Moving the Smart PCS
Mounting the Smart PCS on a Base Support
Mounting the Smart PCS on a Rear Bracket
Cable Installation
Precautions
Preparing Cables
Installing a PE Cable
Installing DC Power Cables
Installing AC Power Cables
Installing Communications Cables
Communications Ports
Installing FE Communications Cables
Installing COM Communications Cables
Check Before Power-On
Power-On and Commissioning
Powering On the Smart PCS
Commissioning the Smart PCS
Setting the Hot Standby Mode
Device Maintenance
Routine Maintenance
Maintenance Items
Powering Off the System

Follow-up Procedure
Alarm Reference
Replacing a Fan
Replacing the Smart PCS
Disposing of the Smart PCS
Technical Specifications
General Specifications
A Crimping an OT or DT Terminal
Grid Codes
C Resetting a Password
D Certificate Management and Maintenance
E How Do I Repair Paint Damage
Repairing Paint Damage for Devices
Repairing Paint Damage for Mounting Brackets
Contact Information
G Digital Power Customer Service
Acronyms and Abbreviations
Other ManualsLib Projects

LUNA2000-213KTL-H0 Smart Power Control System

User Manual

Issue	04
Date	2024-12-30

HUAWEI TECHNOLOGIES CO., LTD.

Copyright © Huawei Technologies Co., Ltd. 2025. All rights reserved.

No part of this document may be reproduced or transmitted in any form or by any means without prior written consent of Huawei Technologies Co., Ltd.

Trademarks and Permissions

HUAWEI and other Huawei trademarks are trademarks of Huawei Technologies Co., Ltd.
All other trademarks and trade names mentioned in this document are the property of their respective holders.

Notice

The purchased products, services and features are stipulated by the contract made between Huawei and the customer. All or part of the products, services and features described in this document may not be within the purchase scope or the usage scope. Unless otherwise specified in the contract, all statements, information, and recommendations in this document are provided "AS IS" without warranties, guarantees or representations of any kind, either express or implied.

The information in this document is subject to change without notice. Every effort has been made in the preparation of this document to ensure accuracy of the contents, but all statements, information, and recommendations in this document do not constitute a warranty of any kind, express or implied.

Huawei Technologies Co., Ltd.

Address: Huawei Industrial Base
Bantian, Longgang
Shenzhen 518129
People's Republic of China

Website: https://e.huawei.com

About This Document

Purpose

This document describes the installation, electrical connections, commissioning, maintenance, and troubleshooting of LUNA2000-213KTL-H0 Smart Power Control System (also referred to as Smart PCS). Before installing and operating the Smart PCS, ensure that you are familiar with the features, functions, and safety precautions provided in this document.

Intended Audience

This document is intended for:

- Installers
- Users

Symbol Conventions

The symbols that may be found in this document are defined as follows:

Symbol	Description
DANGER	Indicates a hazard with a high level of risk which, if not avoided, will result in death or serious injury.
WARNING	Indicates a hazard with a medium level of risk which, if not avoided, could result in death or serious injury.
CAUTION	Indicates a hazard with a low level of risk which, if not avoided, could result in minor or moderate injury.
NOTICE	Indicates a potentially hazardous situation which, if not avoided, could result in equipment damage, data loss, performance deterioration, or unanticipated results. NOTICE is used to address practices not related to personal injury.

Copyright © Huawei Technologies Co., Ltd.

Symbol	Description
NOTE	Supplements the important information in the main text. NOTE is used to address information not related to personal injury, equipment damage, and environment deterioration.

Change History

Changes between document issues are cumulative. The latest document issue contains all the changes made in earlier issues.

Issue 04 (2024-12-30)

Updated **2 Product Description**.

Updated **2.2 Networking Application**.

Updated **5.2 Preparing Cables**.

Updated **5.3 Installing a PE Cable**.

Updated **7.1 Powering On the Smart PCS**.

Updated **8.1 Routine Maintenance**.

Updated **8.5 Replacing the Smart PCS**.

Updated **B Grid Codes**.

Added **E How Do I Repair Paint Damage?**.

Issue 03 (2024-11-30)

Updated **2.2 Networking Application**.

Updated **4.2.1 Site Selection Requirements**.

Updated **4.6 Mounting the Smart PCS on a Base Support**.

Updated **5.2 Preparing Cables**.

Updated **5.3 Installing a PE Cable**.

Updated **5.4 Installing DC Power Cables**.

Updated **5.5 Installing AC Power Cables**.

Updated **7.1 Powering On the Smart PCS**.

Updated **9 Technical Specifications**.

Updated **A Crimping an OT or DT Terminal**.

Issue 02 (2024-09-30)

Added **2.2 Networking Application**.

 Copyright © Huawei Technologies Co., Ltd.

Updated **4.2.3 Foundation Requirements**.

Updated **4.2.4 Clearance Requirements**.

Updated **4.3 Preparing Tools**.

Updated **4.6 Mounting the Smart PCS on a Base Support**.

Updated **5.6.2 Installing COM Communications Cables**.

Updated **8.5 Replacing the Smart PCS**.

Updated **B Grid Codes**.

Issue 01 (2024-07-30)

This issue is used for first office application (FOA).

Contents

About This Document ii

1 Safety Information 1

1.1 Personal Safety 2
1.2 Electrical Safety 4
1.3 Environment Requirements 6
1.4 Mechanical Safety 8

2 Product Description 13

2.1 Model 13
2.2 Networking Application 15
2.3 Appearance 19
2.4 Circuit Diagram 22
2.5 Working Modes 22
2.6 Label Description 23

3 Storage Requirements 25

4 Installation 26

4.1 Installation Modes 26
4.2 Installation Requirements 26
4.2.1 Site Selection Requirements 26
4.2.2 Mounting Structure Requirements 28
4.2.3 Foundation Requirements 29
4.2.4 Clearance Requirements 31
4.2.5 Angle Requirements 32
4.3 Preparing Tools 32
4.4 Pre-installation Checks 35
4.5 Moving the Smart PCS 35
4.6 Mounting the Smart PCS on a Base Support 38
4.7 Mounting the Smart PCS on a Rear Bracket 42

5 Cable Installation 46

5.1 Precautions 46
5.2 Preparing Cables 47
5.3 Installing a PE Cable 48

 Copyright © Huawei Technologies Co., Ltd.

5.4 Installing DC Power Cables 50
5.5 Installing AC Power Cables 53
5.6 Installing Communications Cables 57
5.6.1 Installing FE Communications Cables 58
5.6.2 Installing COM Communications Cables 63
6 Check Before Power-On 71
7 Power-On and Commissioning 73
7.1 Powering On the Smart PCS 73
7.2 Commissioning the Smart PCS 75
7.3 Setting the Hot Standby Mode 76
8 Device Maintenance 78
8.1 Routine Maintenance 78
8.2 Powering Off the System 80
8.3 Alarm Reference 81
8.4 Replacing a Fan 82
8.5 Replacing the Smart PCS 88
8.6 Disposing of the Smart PCS 90
9 Technical Specifications 91
A Crimping an OT or DT Terminal 94
B Grid Codes 98
C Resetting a Password 102
D Certificate Management and Maintenance 103
E How Do I Repair Paint Damage? 104
E.1 Repairing Paint Damage for Devices 104
E.2 Repairing Paint Damage for Mounting Brackets 108
F Contact Information 112
G Digital Power Customer Service 114
H Acronyms and Abbreviations 115

 Copyright © Huawei Technologies Co., Ltd.

1 Safety Information

Statement

Before transporting, storing, installing, operating, using, and/or maintaining the equipment, read this document, strictly follow the instructions provided herein, and follow all the safety instructions on the equipment and in this document. In this document, "equipment" refers to the products, software, components, spare parts, and/or services related to this document; "the Company" refers to the manufacturer (producer), seller, and/or service provider of the equipment; "you" refers to the entity that transports, stores, installs, operates, uses, and/or maintains the equipment.

The **Danger**, **Warning**, **Caution**, and **Notice** statements described in this document do not cover all the safety precautions. You also need to comply with relevant international, national, or regional standards and industry practices. **The Company shall not be liable for any consequences that may arise due to violations of safety requirements or safety standards concerning the design, production, and usage of the equipment.**

The equipment shall be used in an environment that meets the design specifications. Otherwise, the equipment may be faulty, malfunctioning, or damaged, which is not covered under the warranty. The Company shall not be liable for any property loss, personal injury, or even death caused thereby.

Comply with applicable laws, regulations, standards, and specifications during transportation, storage, installation, operation, use, and maintenance.

Do not perform reverse engineering, decompilation, disassembly, adaptation, implantation, or other derivative operations on the equipment software. Do not study the internal implementation logic of the equipment, obtain the source code of the equipment software, violate intellectual property rights, or disclose any of the performance test results of the equipment software.

The Company shall not be liable for any of the following circumstances or their consequences:

- The equipment is damaged due to force majeure such as earthquakes, floods, volcanic eruptions, debris flows, lightning strikes, fires, wars, armed conflicts, typhoons, hurricanes, tornadoes, and other extreme weather conditions.
- The equipment is operated beyond the conditions specified in this document.

 Copyright © Huawei Technologies Co., Ltd.

- The equipment is installed or used in environments that do not comply with international, national, or regional standards.
- The equipment is installed or used by unqualified personnel.
- You fail to follow the operation instructions and safety precautions on the product and in the document.
- You remove or modify the product or modify the software code without authorization.
- You or a third party authorized by you cause the equipment damage during transportation.
- The equipment is damaged due to storage conditions that do not meet the requirements specified in the product document.
- You fail to prepare materials and tools that comply with local laws, regulations, and related standards.
- The equipment is damaged due to your or a third party's negligence, intentional breach, gross negligence, or improper operations, or other reasons not related to the Company.

1.1 Personal Safety

DANGER

Ensure that power is off during installation. Do not install or remove a cable with power on. Transient contact between the core of the cable and the conductor will generate electric arcs or sparks, which may cause a fire or personal injury.

DANGER

Non-standard and improper operations on the energized equipment may cause fire, electric shocks, or explosion, resulting in property damage, personal injury, or even death.

DANGER

Before operations, remove conductive objects such as watches, bracelets, bangles, rings, and necklaces to prevent electric shocks.

DANGER

During operations, use dedicated insulated tools to prevent electric shocks or short circuits. The dielectric withstanding voltage level must comply with local laws, regulations, standards, and specifications.

 Copyright © Huawei Technologies Co., Ltd.

WARNING

During operations, wear personal protective equipment such as protective clothing, insulated shoes, goggles, safety helmets, and insulated gloves.

Figure 1-1 Personal protective equipment

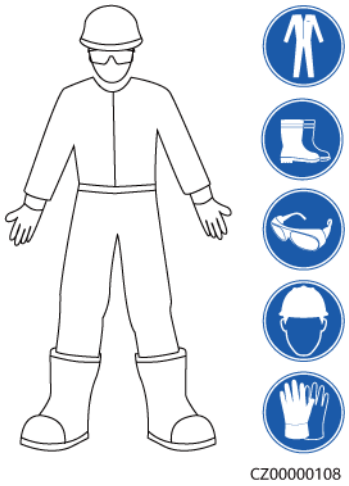

General Requirements

- Do not stop protective devices. Pay attention to the warnings, cautions, and related precautionary measures in this document and on the equipment.
- If there is a likelihood of personal injury or equipment damage during operations, immediately stop, report the case to the supervisor, and take feasible protective measures.
- Do not power on the equipment before it is installed or confirmed by professionals.
- Do not touch the power supply equipment directly or with conductors such as damp objects. Before touching any conductor surface or terminal, measure the voltage at the contact point to ensure that there is no risk of electric shock.
- Do not touch operating equipment because the enclosure is hot.
- Do not touch a running fan with your hands, components, screws, tools, or boards. Otherwise, personal injury or equipment damage may occur.
- In the case of a fire, immediately leave the building or the equipment area and activate the fire alarm or call emergency services. Do not enter the affected building or equipment area under any circumstances.

Personnel Requirements

- Only professionals and trained personnel are allowed to operate the equipment.
  - Professionals: personnel who are familiar with the working principles and structure of the equipment, trained or experienced in equipment operations and are clear of the sources and degree of various potential hazards in equipment installation, operation, maintenance

 Copyright © Huawei Technologies Co., Ltd.

  - Trained personnel: personnel who are trained in technology and safety, have required experience, are aware of possible hazards on themselves in certain operations, and are able to take protective measures to minimize the hazards on themselves and other people
- Personnel who plan to install or maintain the equipment must receive adequate training, be able to correctly perform all operations, and understand all necessary safety precautions and local relevant standards.
- Only qualified professionals or trained personnel are allowed to install, operate, and maintain the equipment.
- Only qualified professionals are allowed to remove safety facilities and inspect the equipment.
- Personnel who will perform special tasks such as electrical operations, working at heights, and operations of special equipment must possess the required local qualifications.
- Only authorized professionals are allowed to replace the equipment or components (including software).
- Only personnel who need to work on the equipment are allowed to access the equipment.

1.2 Electrical Safety

DANGER

Before connecting cables, ensure that the equipment is intact. Otherwise, electric shocks or fire may occur.

DANGER

Non-standard and improper operations may result in fire or electric shocks.

DANGER

Prevent foreign matter from entering the equipment during operations. Otherwise, equipment short-circuits or damage, load power derating, power failure, or personal injury may occur.

WARNING

For the equipment that needs to be grounded, install the ground cable first when installing the equipment and remove the ground cable last when removing the equipment.

 Copyright © Huawei Technologies Co., Ltd.

CAUTION

Do not route cables near the air intake or exhaust vents of the equipment.

General Requirements

- Follow the procedures described in the document for installation, operation, and maintenance. Do not reconstruct or alter the equipment, add components, or change the installation sequence without permission.
- Obtain approval from the national or local electric utility company before connecting the equipment to the grid.
- Observe the power plant safety regulations, such as the operation and work ticket mechanisms.
- Install temporary fences or warning ropes and hang "No Entry" signs around the operation area to keep unauthorized personnel away from the area.
- Before installing or removing power cables, turn off the switches of the equipment and its upstream and downstream switches.
- Before performing operations on the equipment, check that all tools meet the requirements and record the tools. After the operations are complete, collect all of the tools to prevent them from being left inside the equipment.
- Before installing power cables, check that cable labels are correct and cable terminals are insulated.
- When installing the equipment, use a torque tool of a proper measurement range to tighten the screws. When using a wrench to tighten the screws, ensure that the wrench does not tilt and the torque error does not exceed 10% of the specified value.
- Ensure that bolts are tightened with a torque tool and marked in red and blue after double-check. Installation personnel mark tightened bolts in blue. Quality inspection personnel confirm that the bolts are tightened and then mark them in red. (The marks must cross the edges of the bolts.)

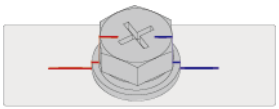

CZ0000112

- If the equipment has multiple inputs, disconnect all the inputs and wait until the equipment is completely powered off before performing operations on the equipment.
- Before maintaining a downstream electrical or power distribution device, turn off the output switch on the power supply equipment.
- During equipment maintenance, attach "Do not switch on" labels near the upstream and downstream switches or circuit breakers as well as warning signs to prevent accidental connection. The equipment can be powered on only after troubleshooting is complete.
- Do not open equipment panels.
- Check equipment connections periodically, ensuring that all screws are securely tightened.
- Only qualified professionals can replace a damaged cable.

 Copyright © Huawei Technologies Co., Ltd.

- Do not scrawl, damage, or block any labels or nameplates on the equipment. Promptly replace labels that have worn out.
- Do not use solvents such as water, alcohol, or oil to clean electrical components inside or outside of the equipment.

Grounding

- Ensure that the grounding impedance of the equipment complies with local electrical standards.
- Ensure that the equipment is connected permanently to the protective ground. Before operating the equipment, check its electrical connection to ensure that it is reliably grounded.
- Do not work on the equipment in the absence of a properly installed ground conductor.
- Do not damage the ground conductor.

Cabling Requirements

- When selecting, installing, and routing cables, follow local safety regulations and rules.
- When routing power cables, ensure that there is no coiling or twisting. Do not join or weld power cables. If necessary, use a longer cable.
- Ensure that all cables are properly connected and insulated, and meet specifications.
- Ensure that the slots and holes for routing cables are free from sharp edges, and that the positions where cables are routed through pipes or cable holes are equipped with cushion materials to prevent the cables from being damaged by sharp edges or burrs.
- Ensure that cables of the same type are bound together neatly and straight and that the cable sheath is intact. When routing cables of different types, ensure that they are away from each other without entanglement and overlapping.
- Secure buried cables using cable supports and cable clips. Ensure that the cables in the backfill area are in close contact with the ground to prevent cable deformation or damage during backfilling.
- If the external conditions (such as the cable layout or ambient temperature) change, verify the cable usage in accordance with the IEC-60364-5-52 or local laws and regulations. For example, check that the current-carrying capacity meets requirements.
- When routing cables, reserve at least 30 mm clearance between the cables and heat-generating components or areas. This prevents deterioration or damage to the cable insulation layer.

1.3 Environment Requirements

DANGER

Do not expose the equipment to flammable or explosive gas or smoke. Do not perform any operation on the equipment in such environments.

 Copyright © Huawei Technologies Co., Ltd.

DANGER

Do not store any flammable or explosive materials in the equipment area.

DANGER

Do not place the equipment near heat sources or fire sources, such as smoke, candles, heaters, or other heating devices. Overheat may damage the equipment or cause a fire.

WARNING

Install the equipment in an area far away from liquids. Do not install it under areas prone to condensation, such as under water pipes and air exhaust vents, or areas prone to water leakage, such as air conditioner vents, ventilation vents, or feeder windows of the equipment room. Ensure that no liquid enters the equipment to prevent faults or short circuits.

WARNING

To prevent damage or fire due to high temperature, ensure that the ventilation vents or heat dissipation systems are not obstructed or covered by other objects while the equipment is running.

General Requirements

- Store the equipment according to the storage requirements. Equipment damage caused by unqualified storage conditions is not covered under the warranty.
- Keep the installation and operating environments of the equipment within the allowed ranges. Otherwise, its performance and safety will be compromised.
- The operating temperature range provided in the equipment's technical specifications refers to the ambient temperatures in equipment's installation environment.
- Do not install, use, or operate outdoor equipment and cables (including but not limited to moving equipment, operating equipment and cables, inserting connectors to or removing connectors from signal ports connected to outdoor facilities, working at heights, performing outdoor installation, and opening doors) in harsh weather conditions such as lightning, rain, snow, and level 6 or stronger wind.
- Do not install the equipment in an environment with dust, smoke, volatile or corrosive gases, infrared and other radiations, organic solvents, or salty air.
- Do not install the equipment in an environment with conductive metal or magnetic dust.
- Do not install the equipment in an area conducive to the growth of microorganisms such as fungus or mildew.

 Copyright © Huawei Technologies Co., Ltd.

- Do not install the equipment in an area with strong vibration, noise, or electromagnetic interference. The equipment shall be installed in an environment with a magnetic field strength less than 4 Gauss. If the magnetic field strength is greater than or equal to 4 Gauss, the equipment may fail to work properly. If the magnetic field strength is high, for example, in a smeltery, you are advised to use a gauss meter to measure the magnetic field strength of the equipment installation position when the smelting equipment is running normally.
- Ensure that the site complies with local laws, regulations, and related standards.
- Ensure that the ground in the installation environment is solid, free from spongy or soft soil, and not prone to subsidence. The site must not be located in a low-lying land prone to water or snow accumulation, and the horizontal level of the site must be above the highest water level of that area in history.
- Do not install the equipment in a position that may be submerged in water.
- Before opening doors during the installation, operation, and maintenance of the equipment, clean up any water, ice, snow, or other foreign objects on the top of the equipment to prevent foreign objects from falling into the equipment.
- When installing the equipment, ensure that the installation surface is solid enough to bear the weight of the equipment.
- After installing the equipment, remove the packing materials such as cartons, foam, plastics, and cable ties from the equipment area.

1.4 Mechanical Safety

WARNING

Ensure that all necessary tools are ready and inspected by a professional organization. Do not use tools that have signs of scratches or fail to pass the inspection or whose inspection validity period has expired. Ensure that the tools are secure and not overloaded.

WARNING

Do not drill holes into the equipment. Doing so may affect the sealing performance and electromagnetic containment of the equipment and damage components or cables inside. Metal shavings from drilling may short-circuit boards inside the equipment.

General Requirements

- Repaint any paint scratches caused during equipment transportation or installation in a timely manner. Equipment with scratches must not be exposed for an extended period of time.
- Do not perform operations such as arc welding and cutting on the equipment without evaluation by the Company.

 Copyright © Huawei Technologies Co., Ltd.

- Do not install other devices on the top of the equipment without evaluation by the Company.
- When performing operations over the top of the equipment, take measures to protect the equipment against damage.
- Use correct tools and operate them in the correct way.

Moving Heavy Objects

- Be cautious to prevent injury when moving heavy objects.

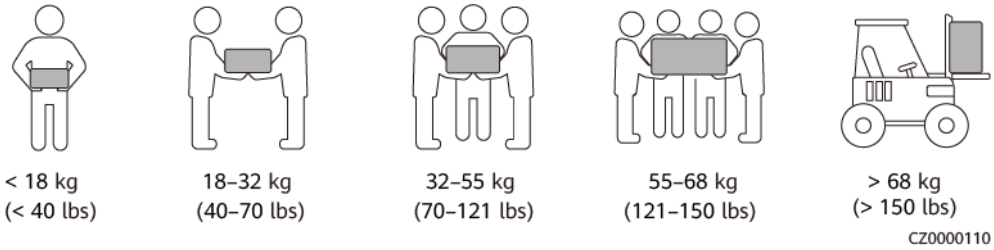

- If multiple persons need to move a heavy object together, determine the manpower and work division with consideration of height and other conditions to ensure that the weight is equally distributed.
- If two persons or more move a heavy object together, ensure that the object is lifted and landed simultaneously and moved at a uniform pace under the supervision of one person.
- Wear personal protective gears such as protective gloves and shoes when manually moving the equipment.
- To move an object by hand, approach to the object, squat down, and then lift the object gently and stably by the force of the legs instead of your back. Do not lift it suddenly or turn your body around.
- Do not quickly lift a heavy object above your waist. Place the object on a workbench that is half-waist high or any other appropriate place, adjust the positions of your palms, and then lift it.
- Move a heavy object stably with balanced force at an even and low speed. Put down the object stably and slowly to prevent any collision or drop from scratching the surface of the equipment or damaging the components and cables.
- When moving a heavy object, be aware of the workbench, slope, staircase, and slippery places. When moving a heavy object through a door, ensure that the door is wide enough to move the object and avoid bumping or injury.
- When transferring a heavy object, move your feet instead of turning your waist around. When lifting and transferring a heavy object, ensure that your feet point to the target direction of movement.
- When transporting the equipment using a pallet truck or forklift, ensure that the tynes are properly positioned so that the equipment does not topple. Before moving the equipment, secure it to the pallet truck or forklift using ropes. When moving the equipment, assign dedicated personnel to take care of it.
- Choose sea, roads in good conditions, or airplanes for transportation. Do not transport the equipment by railway. Avoid tilt or jolt during transportation.

Using Ladders

- Use wooden or insulated ladders when you need to perform live-line working at heights.
- Platform ladders with protective rails are preferred. Single ladders are not recommended.
- Before using a ladder, check that it is intact and confirm its load bearing capacity. Do not overload it.
- Ensure that the ladder is securely positioned and held firm.

CZ00000107

- When climbing up the ladder, keep your body stable and your center of gravity between the side rails, and do not overreach to the sides.
- When a step ladder is used, ensure that the pull ropes are secured.
- If a single ladder is used, the recommended angle for the ladder against the floor is 75 degrees, as shown in the following figure. A square can be used to measure the angle.

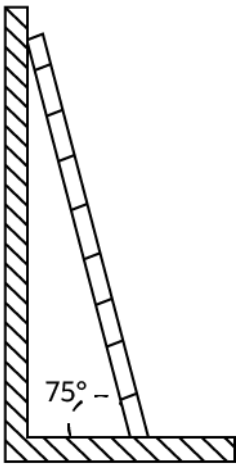

PI02SC0008

- If a single ladder is used, ensure that the wider end of the ladder is at the bottom, and take protective measures to prevent the ladder from sliding.
- If a single ladder is used, do not climb higher than the fourth rung of the ladder from the top.
- If you use a single ladder to climb up to a platform, ensure that the ladder is at least 1 m higher than the platform.

 Copyright © Huawei Technologies Co., Ltd.

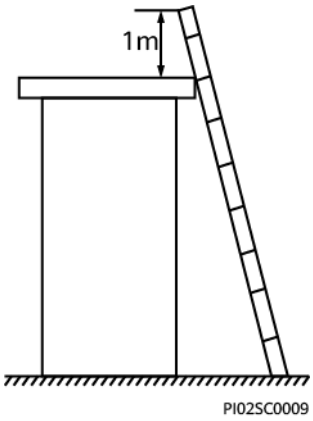

Hoisting

- Only trained and qualified personnel are allowed to perform hoisting operations.
- Install temporary warning signs or fences to isolate the hoisting area.
- Ensure that the foundation where hoisting is performed on meets the load-bearing requirements.
- Before hoisting objects, ensure that hoisting tools are firmly secured onto a fixed object or wall that meets the load-bearing requirements.
- During hoisting, do not stand or walk under the crane or the hoisted objects.
- Do not drag steel ropes and hoisting tools or bump the hoisted objects against hard objects during hoisting.
- Ensure that the angle between two hoisting ropes is no more than 90 degrees, as shown in the following figure.

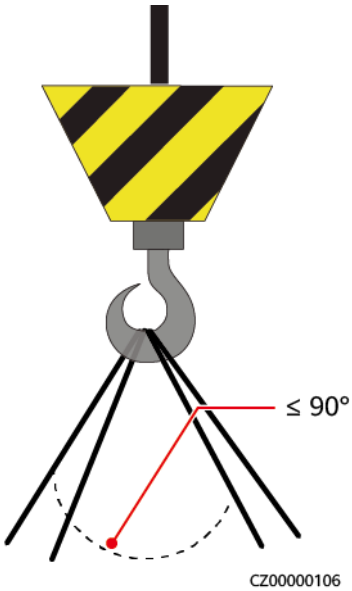

Drilling Holes

- Obtain consent from the customer and contractor before drilling holes.
- Wear protective equipment such as safety goggles and protective gloves when drilling holes.

- To avoid short circuits or other risks, do not drill holes into buried pipes or cables.
- When drilling holes, protect the equipment from shavings. After drilling, clean up any shavings.

 Copyright © Huawei Technologies Co., Ltd.

2 Product Description

On-Grid

- The Smart PCS implements rectification and inversion through a three-phase three-level converter.
- The rectified output is converted from three-phase AC power to DC power and then stored in the energy storage system (ESS).
- The inverted output is filtered to three-phase AC power, which is then isolated and boosted by a three-phase transformer and fed into the power grid.

2.1 Model

Model Description

Figure 2-1 Model

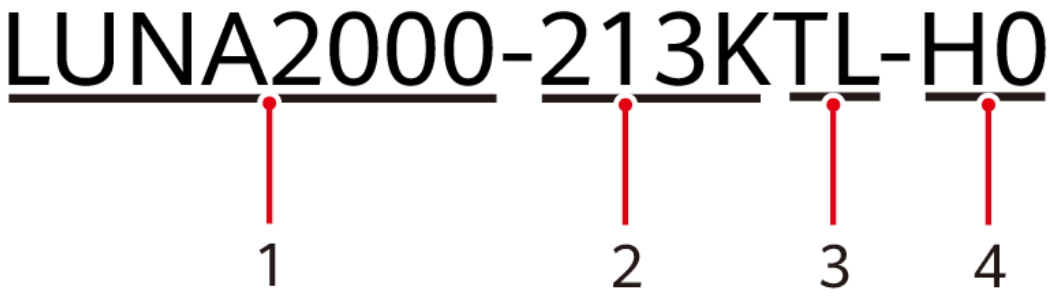

Table 2-1 Model description

No.	Meaning	Description
1	Product family identifier	LUNA2000: Smart PCS
2	Power level identifier	213K: The power level is 213 kW.

 Copyright © Huawei Technologies Co., Ltd.

No.	Meaning	Description
3	Topology identifier	TL: transformerless
4	Product series identifier	H0: product series with the 1500 V DC voltage

Model Label Positions

You can obtain the device model from the model label on the outer packaging and the nameplate on the side of the enclosure.

Figure 2-2 Position of the model label on the outer packaging

(1) Position of the model label

Figure 2-3 Position of the nameplate

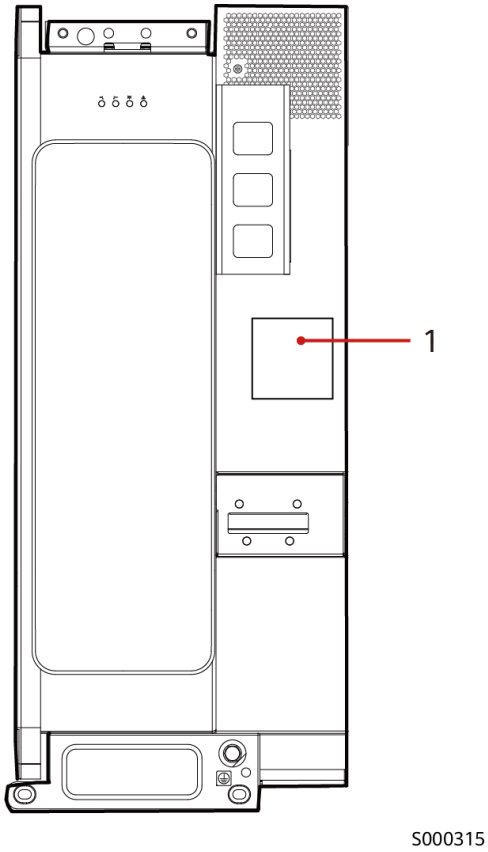

(1) Position of the nameplate

2.2 Networking Application

The system consists of the ESS, Smart Power Control System (PCS), Smart Transformer Station (STS), Distribution Transformer (DTS), and other equipment.

On-Grid Scenario

Figure 2-4 ESS-only solution (separate SACU) networking architecture

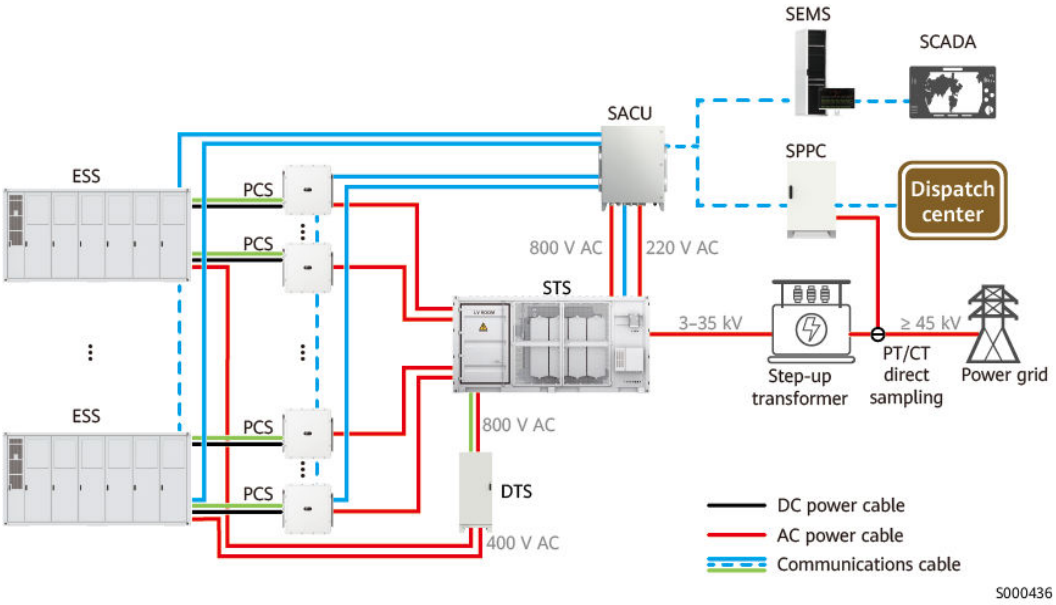

Figure 2-5 Networking architecture of the PV+ESS medium-voltage coupling solution (separate SACU)

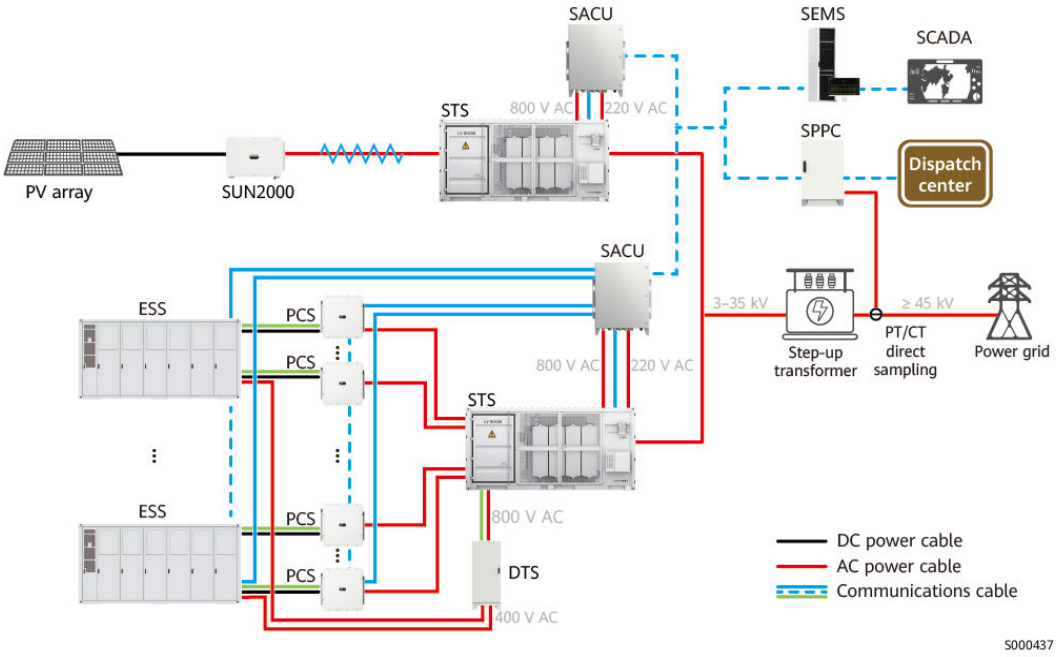

NOTE

The Smart PCS shall be connected to a dedicated power transformer and must not be connected to low-voltage overhead lines.

NOTE

The grid-forming function of the Smart PCS is disabled by default. If the grid-forming function is required, purchase the license and load the license by referring to **License Management** in the *SmartLogger3000 User Manual*. Otherwise, the grid-forming function cannot be used.

Grid forming is different from frequency adaptability specified in grid connection standards (such as GB/T 34120-2023). For details about how to set grid forming/grid following parameters, see the following table.

Parameter	Description
Grid Code	
Grid Code	Set the grid code of the country or region where the devices are used.
Basic parameters	
Working mode	• In the grid forming scenario, set this parameter to **VSG**. • In the grid following scenario, set this parameter to **PQ**.
Microgrid compatibility	Disable
Automatic switching of the working mode	Disable
Power baseline	
Charge/ discharge rate	Set the charge/discharge rate based on site requirements.
Active Power Baseline (kW)	After the charge and discharge rate is set, the system automatically calculates the recommended value.
Apparent Power Baseline (kVA)	Same as above
Maximum Overload Active Power (kW)	Same as above
Maximum Overload Apparent Power (kVA)	Same as above

 Copyright © Huawei Technologies Co., Ltd.

Parameter	Description
Rated operating capacity of the equipment (kW)	Same as above

Earthing System

The Smart PCS supports the IT earthing system.

Figure 2-6 Earthing system

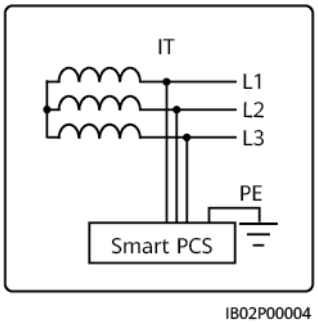

2.3 Appearance

Appearance and Ports

Figure 2-7 Appearance and ports

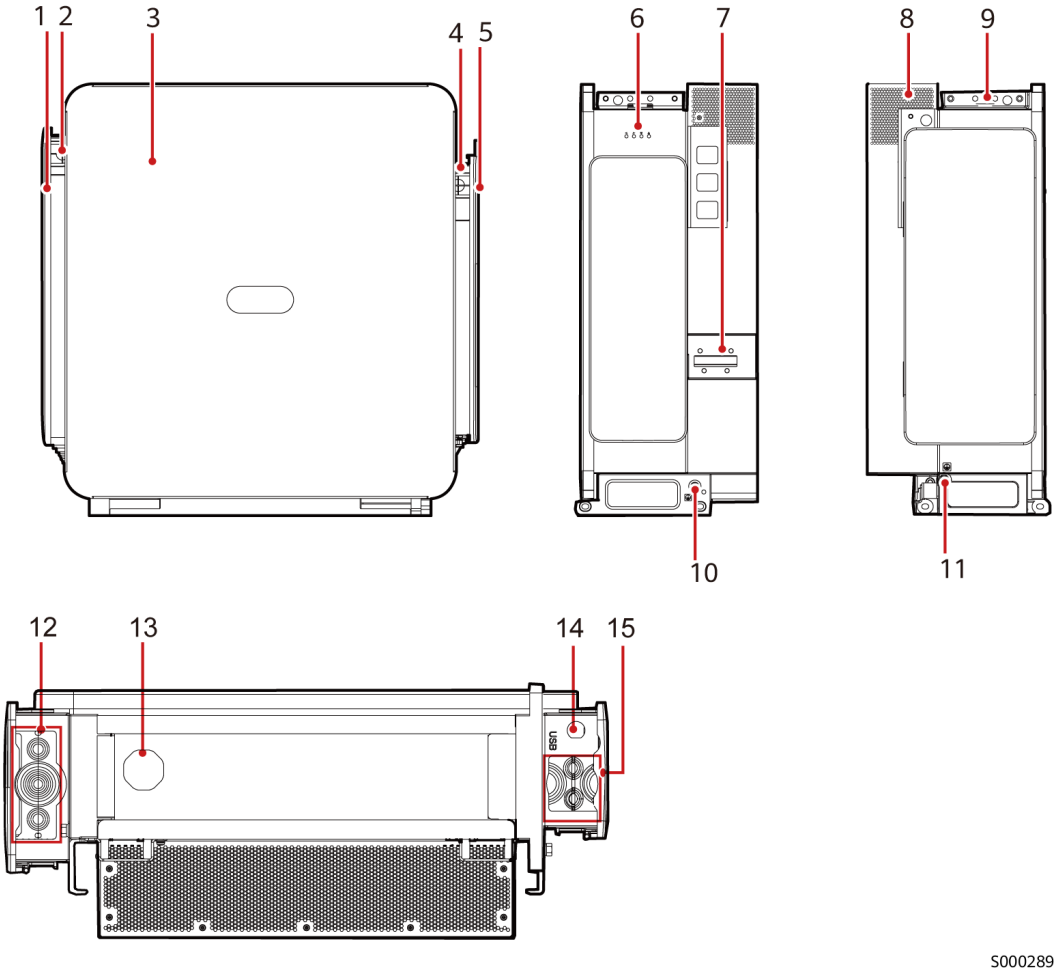

(1) AC maintenance compartment	(2) Communications cable hole (FE)	(3) Panel
(4) Communications cable hole (COM)	(5) DC maintenance compartment	(6) LED indicators
(7) External fan tray	(8) Protective cover	(9) Security Torx wrench[1]
(10) Protective earthing (PE) point 1	(11) PE point 2	(12) AC power cable holes
(13) Ventilation valve	(14) USB port (USB)	(15) DC power cable hole

Copyright © Huawei Technologies Co., Ltd.

Note [1]: The security Torx wrench is delivered with the device and is tied to the bracket on the top of the device. Remove the security Torx wrench from the bracket and keep it safe.

Dimensions

Figure 2-8 Dimensions

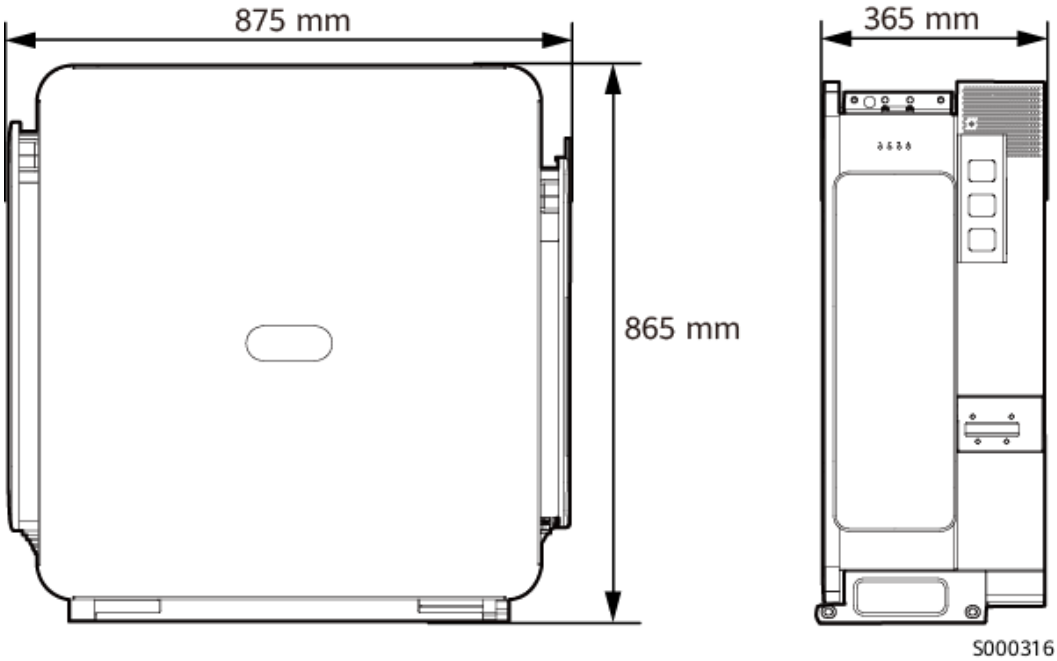

Indicator Description

Check the operating status of the Smart PCS by observing the LED indicators on the panel.

Figure 2-9 LED indicators

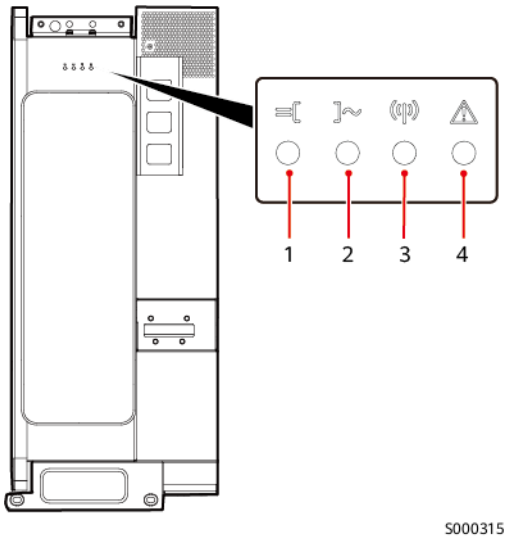

Table 2-2 LED indicator description

No.	Category	Status (Blinking Fast: On for 0.2s and Off for 0.2s; Blinking Slowly: On for 1s and Off for 1s)	Meaning
1	DC indication	Steady green	The DC side is properly connected, and the auxiliary power supply inside the device is working.
		Blinking green slowly	The device is in standby or wiring inspection state.
		Blinking red fast	An environmental fault occurred on the DC side.
		Off	The DC side is not properly connected, or the auxiliary power supply inside the device is not working.
2	Running indication	Steady green	The device is operating in grid-tied mode.
		Steady yellow	The device is operating in off-grid mode.
		Blinking green slowly	The system environment is normal but the device is not in the working state.
		Blinking red fast	An environmental fault occurred on the AC side.
		Off	The AC side is not connected to the power grid.
3	Communication indication	Blinking green fast	The device receives data through northbound FE communication.
		Off	The device has not received data through northbound FE communication in at least 10s.
4	Fault/ Maintenance indication	Steady red	A major alarm was generated on the device.
		Blinking red fast	A minor alarm was generated on the device.
		Blinking red slowly	A warning was generated on the device.
		Blinking green slowly	The device is under local maintenance or shut down after receiving a command.
		Off	There is no alarm, and no local maintenance operations are performed.

 Copyright © Huawei Technologies Co., Ltd.

NOTE

- If the DC indicator and running indicator do not blink red fast and the fault/maintenance indicator is steady red, replace parts or the entire device.
- Local maintenance refers to the operation that requires inserting a WLAN module into the USB port of the device, for example, connecting to the FusionSolar app through the WLAN module.
- If alarms are generated during the local maintenance, the fault/maintenance indicator shows the local maintenance state first. After the WLAN module is removed, the indicator shows the alarm state.

2.4 Circuit Diagram

Figure 2-10 Circuit diagram

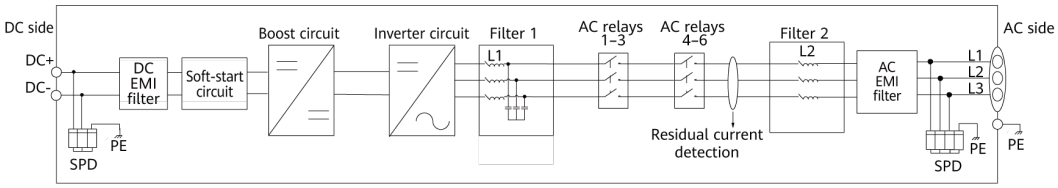

2.5 Working Modes

The Smart PCS has three working modes: standby, operating, and shutdown.

Figure 2-11 Working modes

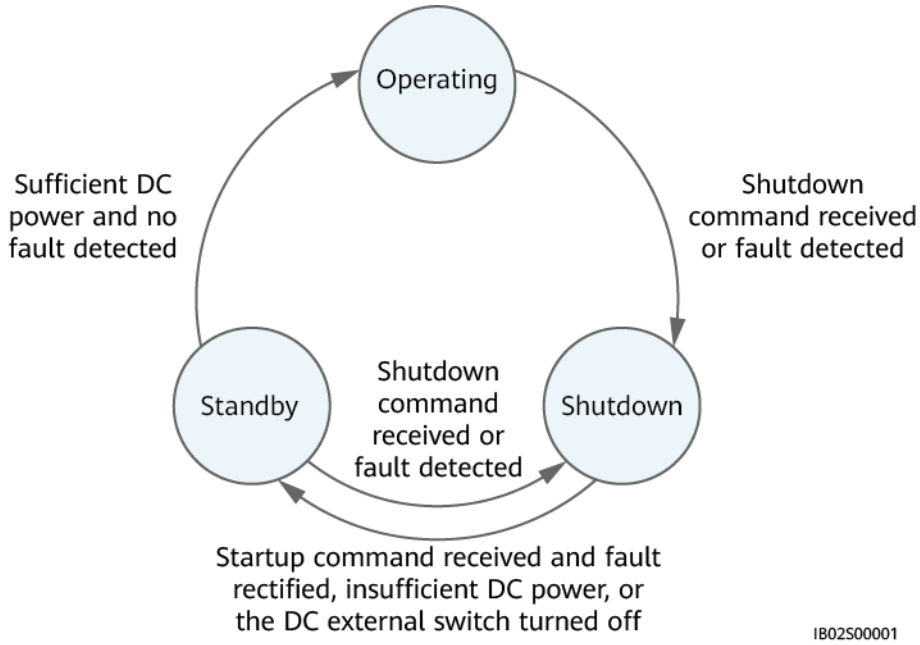

Table 2-3 Working mode description

Working Mode	Description
Standby	The Smart PCS enters standby mode when the external environment does not meet the operating requirements. In standby mode: • The Smart PCS continuously detects its operation status. Once the operation conditions are met, the Smart PCS enters operating mode. • If the Smart PCS detects a shutdown command or a fault after startup, it enters shutdown mode.
Operating	In operating mode: • The Smart PCS controls charge and discharge based on system commands. • The Smart PCS enters shutdown mode after detecting a fault or receiving a shutdown command. • In the on-grid state, you are advised to set the Smart PCS to work in hot standby mode, which reduces the no-load loss when the Smart PCS is operating with zero power. For details, see **7.3 Setting the Hot Standby Mode**.
Shutdown	• In standby or operating mode, if the Smart PCS detects a shutdown command or a fault, it enters shutdown mode. • In shutdown mode, the Smart PCS enters standby mode when a startup command is received and faults are rectified, the DC power is insufficient, or the DC external switch is turned off.

2.6 Label Description

Table 2-4 Enclosure labels

Symbol	Name	Meaning
	Operation warning	Potential hazards exist after the device is powered on. Take protective measures when working on the device.
	High temperature hazard	Do not touch the device, as the enclosure is hot when the device is running.
	Electric shock hazard	Hazardous voltage exists after the device is powered on. Take protective measures during operation and maintenance (O&M).

 Copyright © Huawei Technologies Co., Ltd.

Symbol	Name	Meaning
	Delayed discharge	• High voltage may occur after the device is powered on. Only qualified and trained electrical technicians are allowed to install and operate the device. • Residual voltage exists after the device is powered off. It takes 30 minutes for the device to discharge to the safe voltage.
	Refer to documentation	Reminds operators to refer to the documentation provided with the device. Losses caused by operations that do not comply with the requirements of site selection, storage, or mounting specified in the user manual are not covered under the warranty.
	Noise	Noise may be generated when the device is running. It is recommended that you wear a hearing protection device.
	Protective earthing	Indicates the position for connecting the protective earthing (PE) cable.
	Equipotential bonding	Indicates the position for equipotential bonding.
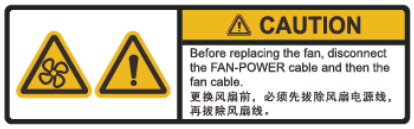	Fan replacement/ operation warning	• Before replacing the fan, disconnect its power connector. • Do not touch the fan when the device is running to prevent mechanical injury.
	Weight	The device needs to be carried by four persons or using a forklift.

3 Storage Requirements

NOTICE

- Store Smart PCSs according to the storage requirements. Device damage caused by unqualified storage conditions is not covered under the warranty.
- Do not store Smart PCSs without outer packaging.
- Do not tilt a packing case or place it upside down.

If Smart PCSs will not be put into use immediately, store them according to the requirements specified in this section. Device damage caused by unqualified storage conditions is not covered under the warranty. Store Smart PCSs with outer packaging in a ventilated, dry, and clean indoor environment. In addition, ensure that the following requirements are met:

- If Smart PCSs are unpacked but will not be used immediately, put them back to the original packaging with the desiccant, and seal with tape.
- When temporarily storing Smart PCSs outdoors, do not stack them on a pallet. Take rainproof measures such as using tarpaulins to protect Smart PCSs from rain and water.
- Smart PCSs must be stored in a clean and dry environment with appropriate temperature and humidity. The air must not contain corrosive or flammable gases. Maintain a storage temperature between –40°C to +70°C, and humidity between 5%–95% RH.
- A maximum of four Smart PCSs can be stacked. To avoid personal injury or device damage, exercise caution when stacking Smart PCSs to prevent them from falling over.
- Do not remove the outer packaging. Check the packaging regularly (recommended: once every three months). Replace any packaging that is damaged during storage.
- Do not store Smart PCSs for more than two years. If Smart PCSs have been stored for two years or longer, they must be checked and tested by professionals before being put into use.
- If the Smart PCS has not been running for six months or longer after being mounted, it may fail and must be checked and tested by professionals before being put into operation.

 Copyright © Huawei Technologies Co., Ltd.

4 Installation

4.1 Installation Modes

The Smart PCS can be mounted on a base support or rear bracket.

Table 4-1 Installation modes

Installation Mode		Quantity	Source
Base support-mounted	Base support	1	Purchased from the Company
	M12 stainless steel expansion bolt	6	Delivered with the base support
	M12 stainless steel screw assembly	12	
	M10 stainless steel screw assembly	12	
	M8 hex socket screw	44	
	Angle steel bracket	6	
Rear bracket-mounted	Mounting bracket	1	Purchased from the Company
	M12 stainless steel expansion bolt	4	Delivered with the mounting bracket
	M6 security Torx screw	6	

4.2 Installation Requirements

4.2.1 Site Selection Requirements

- Do not install the Smart PCS in working or living areas to avoid personal injury or property loss caused by accidental contact by non-professionals or other reasons during device operation.

 Copyright © Huawei Technologies Co., Ltd.

- Do not install the Smart PCS in noise-sensitive areas (such as residential areas, office areas, and schools) to avoid complaints. If the preceding areas are unavoidable, the distance between the installation position and noise-sensitive areas must be greater than or equal to 40 m.
- If the equipment is installed in a place with abundant vegetation, in addition to routine weeding, harden the ground underneath the equipment using cement or gravel (the area shall be greater than or equal to 3 m x 2.5 m).
- If the Smart PCS is installed in public places (such as parking lots, stations, and factories) other than working and living areas, install a protective net outside the device and set up a safety warning sign to isolate the device. This is to avoid personal injury or property loss caused by accidental contact by non-professionals or other reasons during device operation.
- Do not install the Smart PCS in areas containing flammable materials (such as sulfur, phosphorus, liquefied petroleum gas, marsh gas, flour, and cotton) to avoid personal injury or property loss caused by fire or other reasons.
- Do not install the Smart PCS in areas containing explosives (such as blasting agents, display shells, fireworks, and firecrackers) to avoid personal injury or property loss caused by explosion or other reasons.
- Do not install the Smart PCS in areas with corrosive substances (such as sulfuric acid, hydrochloric acid, nitric acid, hydrogen sulfide, and chlorine) to avoid Smart PCS failure caused by corrosion, which is not covered under the warranty.
- The mounting structure for the Smart PCS must be fireproof. Do not install the Smart PCS on flammable building materials to avoid personal injury or property loss caused by fire or other reasons.
- The device may corrode if it is installed in a salt-affected area near the sea. For such locations, select a Smart PCS model designed for use near the sea. For details, contact the Company. A salt-affected area refers to the region within 500 m of the coast or prone to sea breeze. Regions prone to sea breeze vary with weather conditions (such as typhoons and monsoons) or terrains (such as dams and hills).
- The DC power cable from each Smart PCS to the power distribution cabin of the ESS shall be at least 5 m long. The AC power cable from each Smart PCS to the AC combiner box or the LV panel of the transformer station shall be at least 5 m long. The Smart PCS provides the self-protection function against circulating current. As the length of the input and output power cables decreases, circulating current protection may be triggered, causing power derating.
- Do not install the Smart PCS in an easily accessible place, because the voltage is high and its enclosure and heat sink are hot during device operation. This is to avoid personal injury or property loss caused by accidental contact by non-professionals or other reasons during device operation.
- The Smart PCS shall be installed in a well-ventilated environment to ensure good heat dissipation. The Smart PCS provides self-protection in high-temperature environments. If the Smart PCS is installed in a poorly ventilated environment, the power of the Smart PCS may decrease as the ambient temperature increases.
- If the Smart PCS is installed in an enclosed environment, a heat dissipation device or ventilation device shall be installed. The indoor ambient temperature must not be higher than the outdoor ambient temperature. The

 Copyright © Huawei Technologies Co., Ltd.

Smart PCS provides self-protection in high-temperature environments. The power of the Smart PCS may decrease as the ambient temperature increases.

- Do not install the equipment in an area with strong vibration, noise, or electromagnetic interference. The equipment shall be installed in an environment with a magnetic field strength less than 4 Gauss. If the magnetic field strength is greater than or equal to 4 Gauss, the equipment may fail to work properly. If the magnetic field strength is high, for example, in a smeltery, you are advised to use a gauss meter to measure the magnetic field strength of the equipment installation position when the smelting equipment is running normally.
- You are advised to install the Smart PCS in a place with a sunshade or install an awning for the Smart PCS in case of high temperature or direct sunlight. It is recommended that the front of the Smart PCS face north if it is installed in the northern hemisphere or face south if it is installed in the southern hemisphere.
- Take waterproof and insulation measures for unused DC power cables to avoid personal injury or property loss caused by accidental contact with high voltage or other reasons.
- AC and DC power cables must be vertically routed into maintenance compartments and wiring terminals to avoid damage caused by horizontal stress on the terminals, which is not covered under the warranty.

NOTE

- The Smart PCS is not intended for use in a residential environment, must not be directly connected to a residential low-voltage power grid, and may cause radio interference, in which case the user may be required to take additional mitigation measures against electromagnetic interference.
- The Smart PCS shall be physically separated from residential environments or radio receivers by distance greater than 30 m, and can be equipped with additional filtering if necessary.

4.2.2 Mounting Structure Requirements

- The mounting structure for the device must be fireproof. Do not install the device on flammable building materials to avoid personal injury or property loss caused by fire or other reasons.
- In residential areas, do not install the device on gypsum boards or walls made of similar materials with weak sound insulation performance to avoid disturbing residents.
- Ensure that the installation surface is solid enough to bear the weight of the Smart PCS (for details, see **Figure 4-1**) to avoid personal injury or property loss caused by the collapse of the mounting structure or other reasons.

 Copyright © Huawei Technologies Co., Ltd.

Figure 4-1 Mounting structure

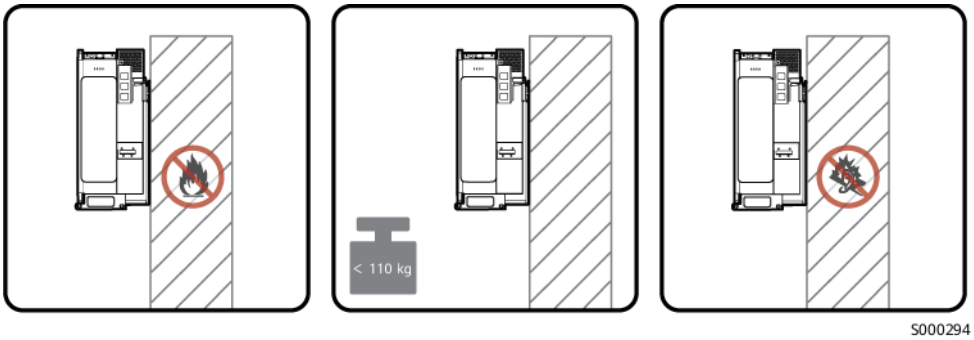

4.2.3 Foundation Requirements

A foundation is required only in the base support-mounting scenario.

Before installation, build concrete platforms and trenches on the selected ground. The foundation construction requirements are as follows:

- The dimensions of the foundation shall meet the installation and load-bearing requirements of the base support.
- The foundation must be above the highest water level and snow depth of the local area in history and at least 300 mm above the ground.
- The average foundation strength shall exceed 100 kg/cm^2.
- The levelness error of the contact surface between the foundation and base support shall be less than 5 mm. During construction, consider the soil compaction factor to avoid subsidence, and periodically measure the levelness. If the levelness does not meet the requirement due to subsidence, use leveling spacers.
- Cables are routed from the bottom of the base support. Therefore, you shall bury cables underneath before installing the base support.
- The inner diameter of the protective tube shall be greater than or equal to 1.5 times the outer diameter of the cable (including the protective layer).
- Construct drainage facilities based on the local geological conditions and municipal drainage requirements to ensure that no water will accumulate at the equipment foundation. The foundation construction must meet the local drainage requirements for the maximum historical rainfall. The drained water must be disposed of in accordance with local laws and regulations.
- After the foundation is excavated, prevent water from entering the foundation. If water enters the foundation, excavate and refill the affected parts.
- Cable trenches (if any) shall not be used for drainage. Fire retardant sealing shall be implemented at cable holes (such as holes through partition walls and floors).

 Copyright © Huawei Technologies Co., Ltd.

Table 4-2 Checklist

No.	Check Item	Acceptance Criteria
1	Cabling space at the bottom	• If no maintenance space at the bottom is required, it is recommended that the cabling space at the bottom of the base support be greater than or equal to 1.1 m. • If maintenance space at the bottom is required, it is recommended that the cabling space at the bottom of the base support be greater than or equal to 1.3 m.
2	Cable	• The bending radius of a cable is greater than or equal to 15 times the cable diameter. • The voltage drop of the farthest loop does not exceed 5%. • The sensitivity, voltage level, and thermal stability of the cables meet the local design specifications.

Figure 4-2 Foundation diagram

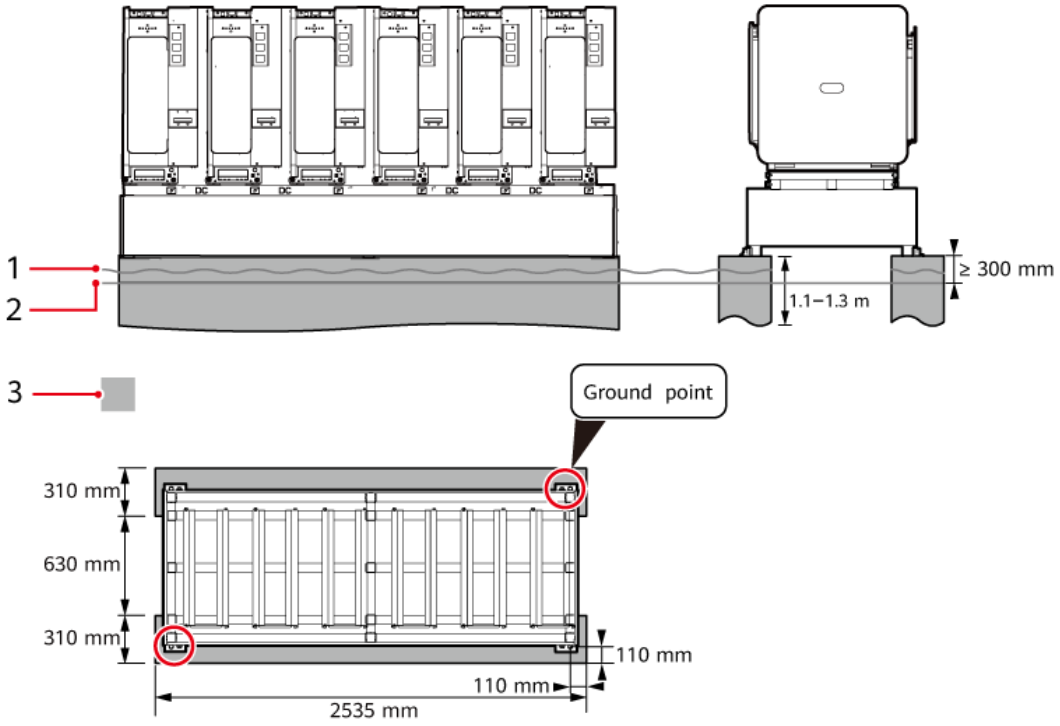

(1) Highest water level of the local area in history	(2) Ground	(3) Foundation

4.2.4 Clearance Requirements

Reserve sufficient clearance around the Smart PCS for installation and heat dissipation.

- Base support-mounted

Figure 4-3 Clearances

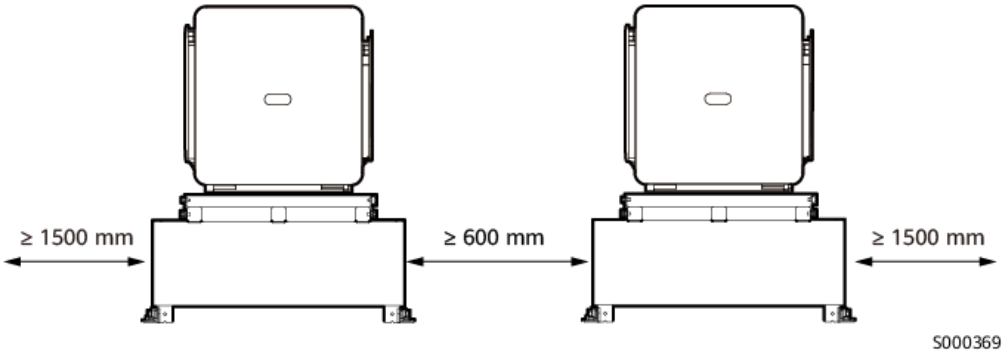

NOTE

For ease of installation, cable connection, and maintenance, you are advised to reserve at least 1500 mm clearance. For further questions regarding the clearance, consult local technical support engineers.

- Rear bracket-mounted:

Figure 4-4 Clearances

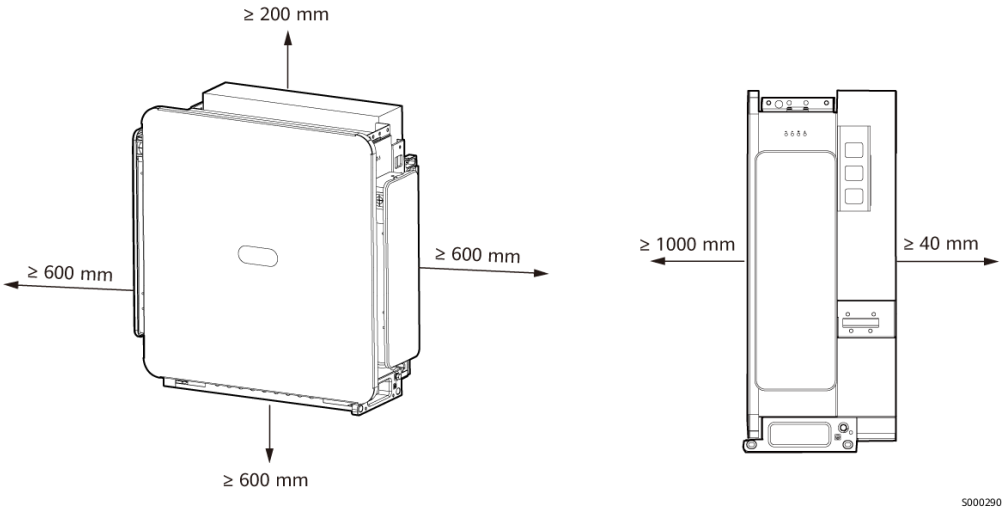

NOTE

For ease of installation, cable connection, and maintenance, reserve 600–730 mm clearance underneath. For further questions regarding the clearance, consult local technical support engineers.

If multiple devices need to be installed and the clearance is sufficient, install them in horizontal mode. You are not advised to install multiple devices in close-to-wall installation mode. Stacked or triangle installation is not allowed.

Figure 4-5 Horizontal installation mode (recommended)

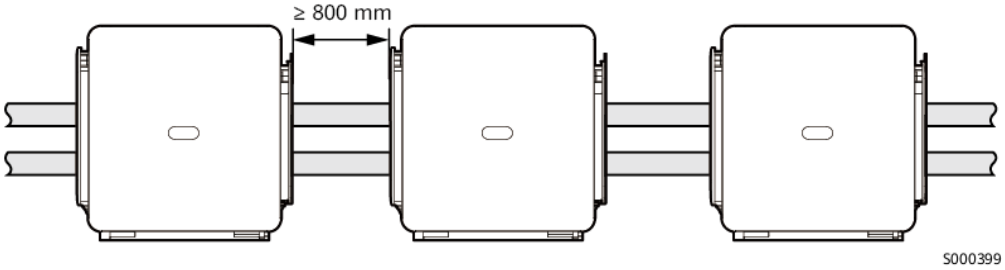

4.2.5 Angle Requirements

Figure 4-6 Installation angle

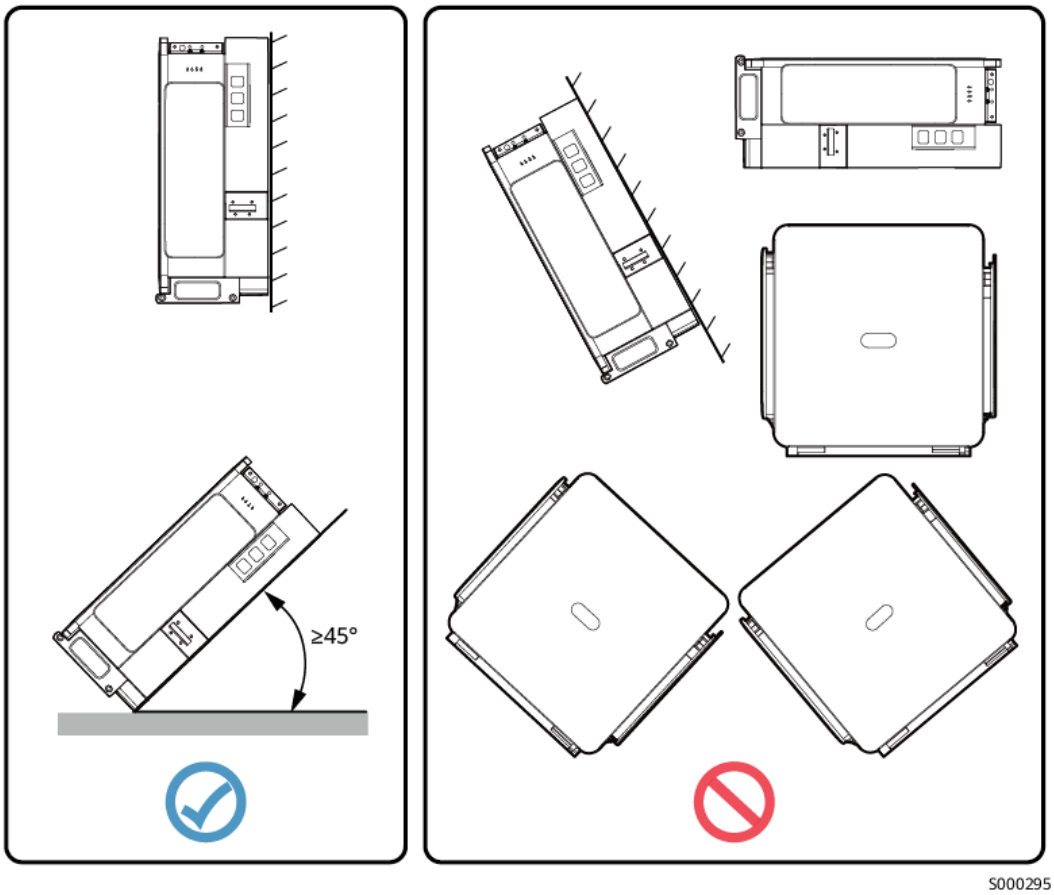

4.3 Preparing Tools

Before installation, the following tools need to be prepared.

Installation Tools

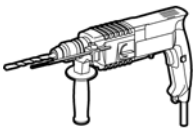 Hammer drill	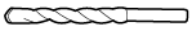 Drill bit (Φ14 mm and Φ16 mm)	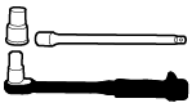 Insulated torque socket wrench (including an extension bar ≥ 50 mm)	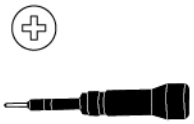 Phillips insulated torque screwdriver
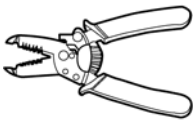 Wire stripper	Rubber mallet	Utility knife	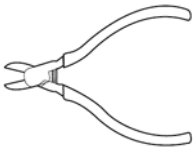 Diagonal pliers
Cable cutter	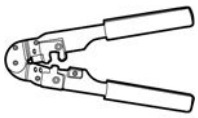 RJ45 crimping tool	Vacuum cleaner	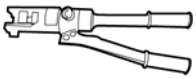 Hydraulic pliers
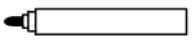 Marker	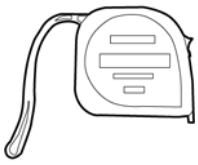 Steel measuring tape	Level	Cable tie

 Copyright © Huawei Technologies Co., Ltd.

 Heat shrink tubing	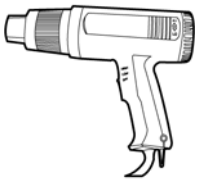 Heat gun	 Ladder	 Digital multimeter DC voltage measurement range ≥ 1500 V DC AC voltage measurement range ≥ 800 V AC
 Crane Hoisting capability ≥ 3 t; working radius ≥ 2 m	 Lifting sling Length ≥ 1.8 m	-	-

Personal Protective Equipment (PPE)

 Insulated gloves	 Goggles	 Dust mask	 Insulated shoes
 Reflective vest	 Safety helmet	 Protective gloves	-

4.4 Pre-installation Checks

NOTICE

- After placing the equipment in the installation position, unpack it with care to prevent scratches. Keep the equipment stable during unpacking.

Checking the Outer Packing

Before unpacking the device, check the outer packing for damage, such as holes and cracks, and check the device model. If any damage is found, or if the device model is not what you requested, do not unpack the product and contact your dealer as soon as possible.

NOTE

You are advised to install the device within 24 hours of removing the outer packing.

Unpacking the Device

Step 1 Use diagonal pliers to cut the packing tape, and use a utility knife to slice the tape along the gaps in the packaging. Take care not to damage the device inside.

Step 2 Open the packaging and check the deliverables.

----End

Checking Deliverables

After unpacking the device, check that the deliverables are intact and complete, and check that the device is free from any obvious damage. If any items are missing or damaged, contact your dealer.

NOTE

For details about the number of accessories delivered with the device, see the *Packing List* included in the packaging.

4.5 Moving the Smart PCS

Precautions

CAUTION

Ensure that the lifting handles are installed to the correct screw holes. Do not install them to the mounting bracket screw holes on the top. Incorrect installation may cause device damage or personal injury.

 Copyright © Huawei Technologies Co., Ltd.

NOTICE

- Four persons or appropriate transportation tools are required to move the device.
- Place a foam pad or cardboard under the device to protect its enclosure from damage.
- Use the lifting handles to facilitate installation. The lifting handles are not delivered with the equipment, but are optional and placed in the fitting bag. Ensure that the lifting handles are securely installed. After the installation is complete, remove the lifting handles and keep them properly.
- Secure the lifting handles (with the steel washers of the lifting handles closely fitted to the device).
- If the stud of a lifting handle is bent, replace the lifting handle in time.
- Slowly and steadily hoist, land, and move the Smart PCS to avoid bumping and damaging the device enclosure.

Method

If the installation position is too high to directly install the Smart PCS on the mounting bracket, you can use a crane to hoist the Smart PCS. Run a sling (strong enough to bear the weight of the Smart PCS) through the two lifting eyes to hoist the Smart PCS.

Table 4-3 Method description

Method	Tool	Description
Manual handling	Lifting handles	Purchased from the Company
Hoisting	Crane sling[1]	Prepared by the customer
Note [1]: The hoisting capability of the crane shall be greater than or equal to 3 t, the working radius shall be greater than or equal to 2 m, and the length of the lifting sling shall be greater than or equal to 1.8 m. To prevent damage to the device surfaces, you are advised not to use metal slings such as steel wire ropes.		

Hole Description

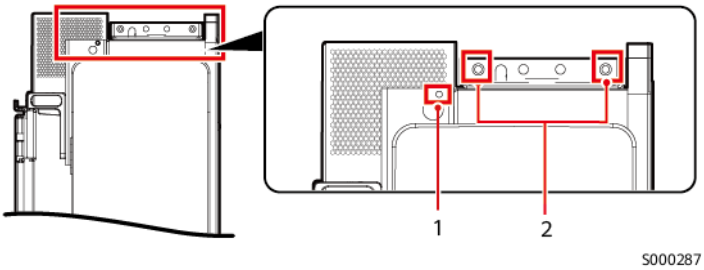

(1) Lifting handle screw hole (2) Mounting bracket screw holes

Procedure

Step 1 Take the device out of the packing case and move it to the specified position.

Figure 4-7 Using the lifting handles

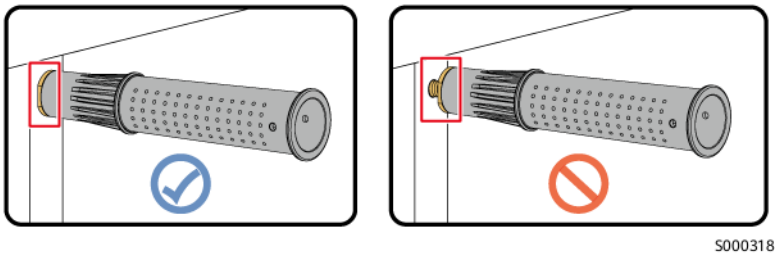

Figure 4-8 Manual handling

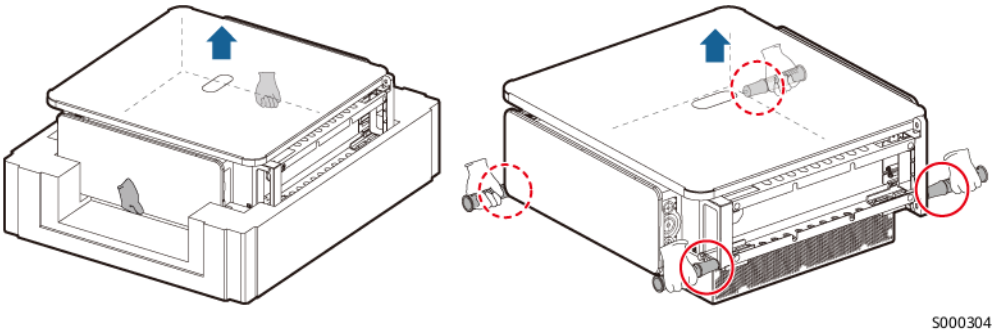

Figure 4-9 Hoisting

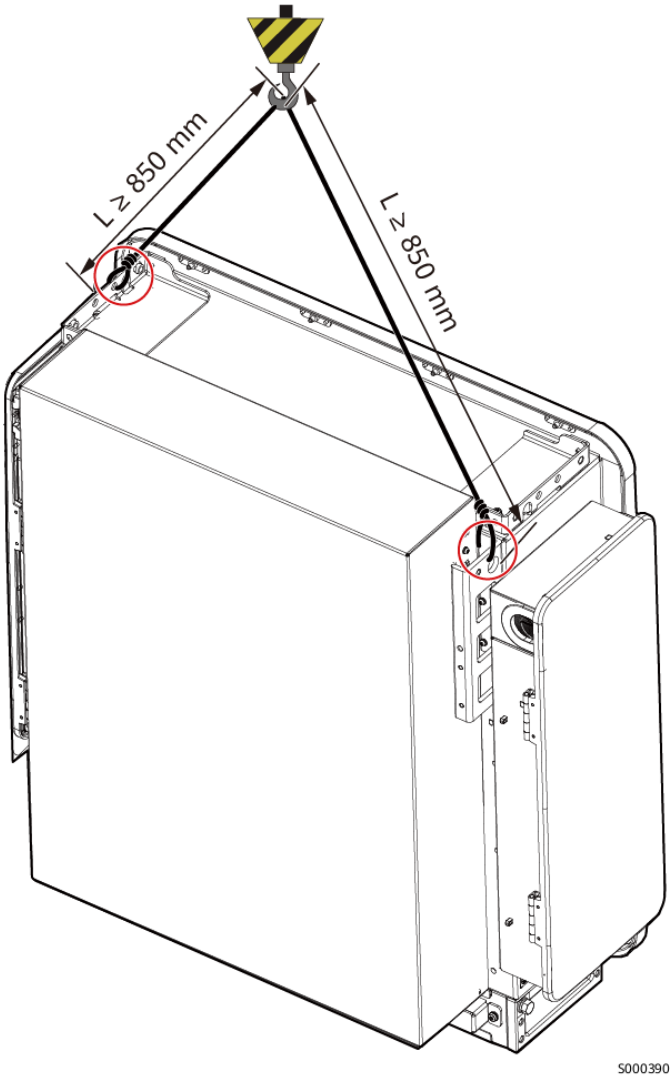

----End

4.6 Mounting the Smart PCS on a Base Support

Precautions

- To prevent dust inhalation or contact with eyes, wear safety goggles and a dust mask when drilling holes.
- Use a vacuum cleaner to clean up dust in and around the holes, and measure the spacing. If the holes are inaccurately positioned, drill the holes again.
- After removing the bolt, spring washer, and flat washer from an expansion bolt, level the top of the expansion sleeve with the ground so that the sleeve does not protrude from the ground. Otherwise, the base support will not be positioned stably.

Base Support

- The base support needs to be purchased separately from the Company.
- The dimensions (L x W x H) of the base support is 2380 mm x 916 mm x 450 mm.
- The base support weighs 110 kg.

Procedure

Step 1 Open the packing case and take out the base support.

1. Pull the lock tongues straight and remove the four-sided sealing plates and top panel.

Figure 4-10 Removing the four-sided sealing plates and top panel

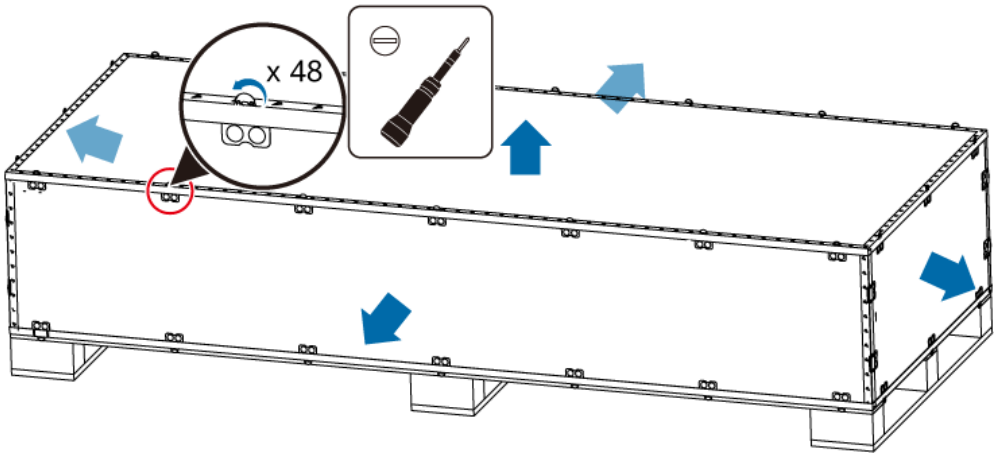

2. Remove the screws for securing the base support.

Figure 4-11 Removing screws

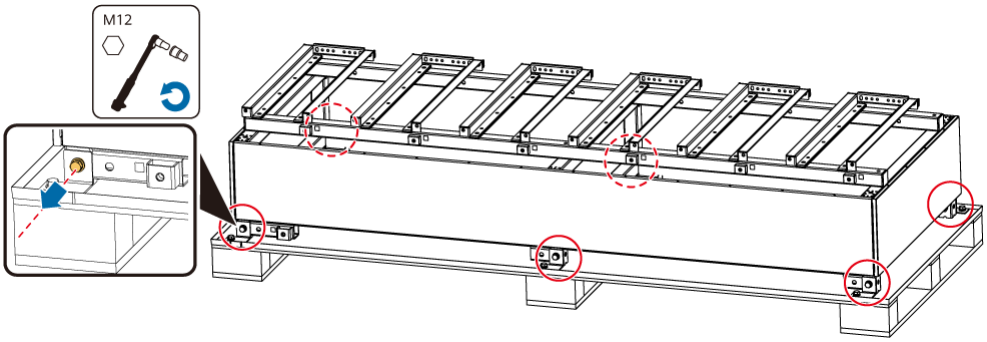

Step 2 Move the base support to the selected foundation.

NOTICE

- Four persons or appropriate transportation tools, such as forklift and crane, are required to move the base support.
- The eye bolts are delivered with the base support. After the hoisting is complete, remove and keep the eye bolts properly. The eye bolts might be rusted if not removed.

 Copyright © Huawei Technologies Co., Ltd.

Figure 4-12 Manual handling

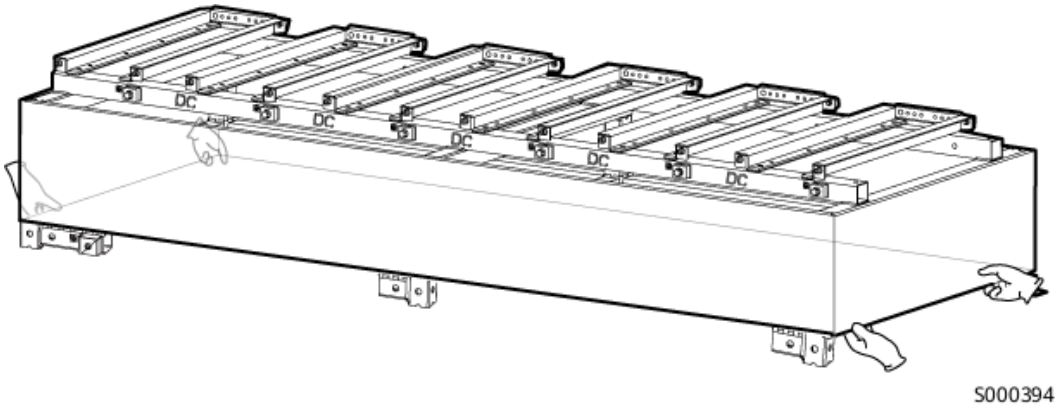

Figure 4-13 Hoisting

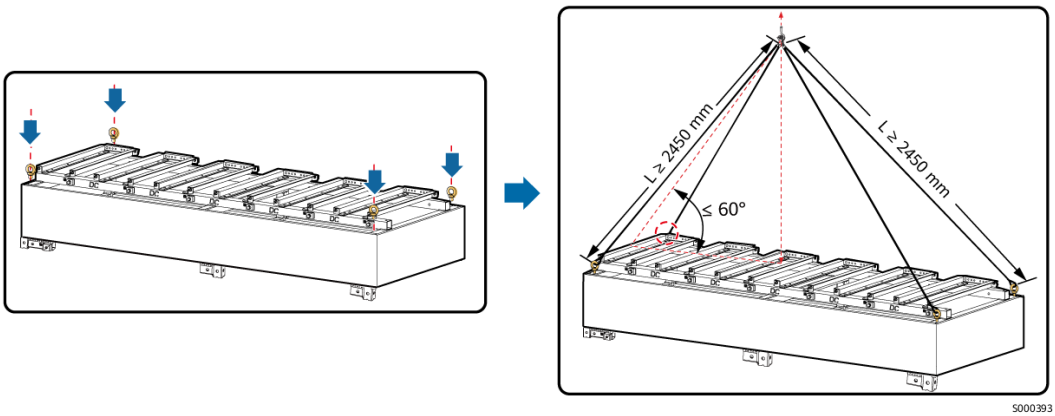

Step 3 Check whether there is a gap between the base support and the concrete platforms. If yes, level the base support using leveling spacers delivered with the product.

Step 4 Secure the base support to the foundation.

CAUTION

- You are advised to place the base support with its DC side facing the ESS.
- The base support requires six mounting holes on the foundation. Mark all the mounting holes.

NOTE

Each angle steel bracket must be secured at one mounting hole. If the drill bit interferes with reinforcing steel bars in the concrete foundation or the position of the first drilled hole is deviated, use a spare mounting hole.

 Copyright © Huawei Technologies Co., Ltd.

Figure 4-14 Securing the base support

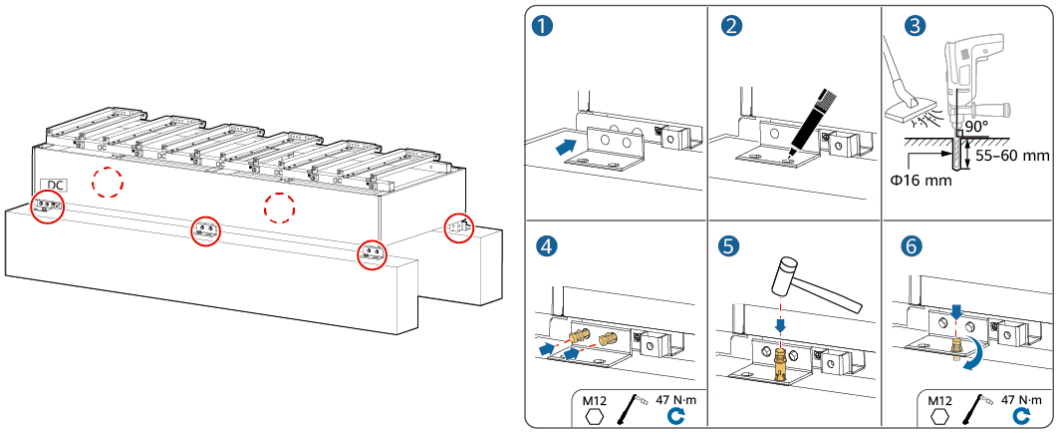

After the base support is secured, verify the installation to ensure normal use of the base support and smooth subsequent installation.

Table 4-4 Verifying the installation

Check Item	Check Method	Criteria
Bolts and nuts	Tighten the bolts and nuts again using a wrench to the same torque.	Bolts and nuts are tightened.

Step 5 Install the first Smart PCS.

Move the Smart PCS to the top of the base support, push it along the guide rails from the DC side, and secure it to the base support using the delivered screws. Both the DC and AC sides need to be secured.

CAUTION

Do not stand on the top of the base support.

Figure 4-15 Securing a Smart PCS

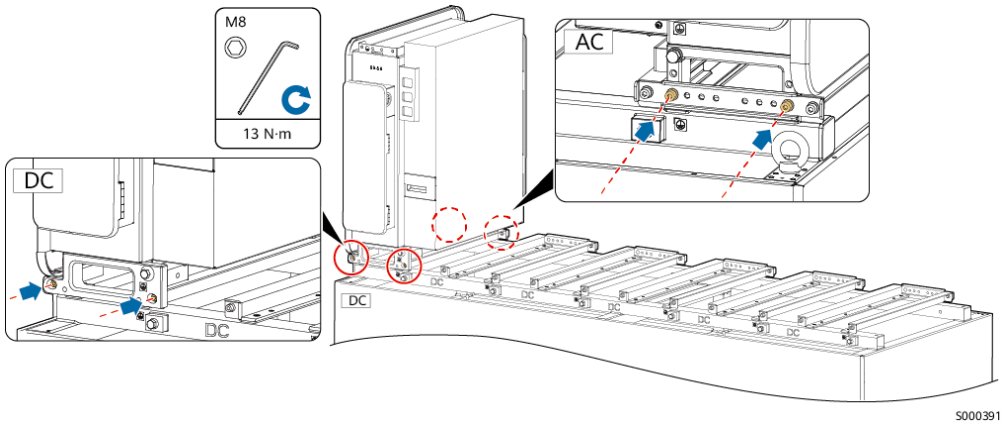

Step 6 Install the other Smart PCSs in the same way. For details, see the figure in **Step 5**.

Step 7 Install the connecting brackets delivered with the base support. The connecting brackets need to be installed on both the DC and AC sides.

NOTE

A maximum of six Smart PCSs can be installed on the base support. If there are less than six Smart PCSs, install them from left to right. Otherwise, the Smart PCS connecting brackets cannot be used.

Figure 4-16 Installing and securing connecting brackets

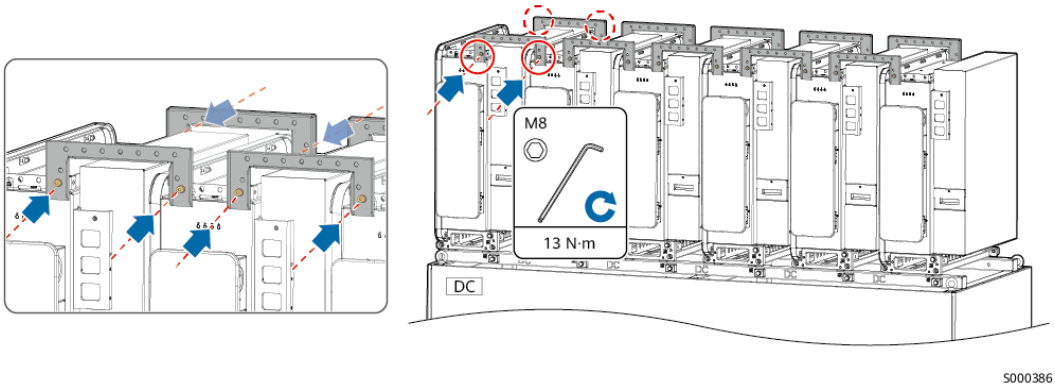

----End

4.7 Mounting the Smart PCS on a Rear Bracket

Mounting Bracket

Purchase the mounting bracket separately from the Company. M12 bolt assemblies are delivered with the mounting bracket.

The mounting bracket of the Smart PCS has four groups of tapped holes, each group containing four tapped holes. Mark any hole in each group based on site requirements and mark four holes in total. The two round holes are recommended.

 Copyright © Huawei Technologies Co., Ltd.

Figure 4-17 Hole dimensions

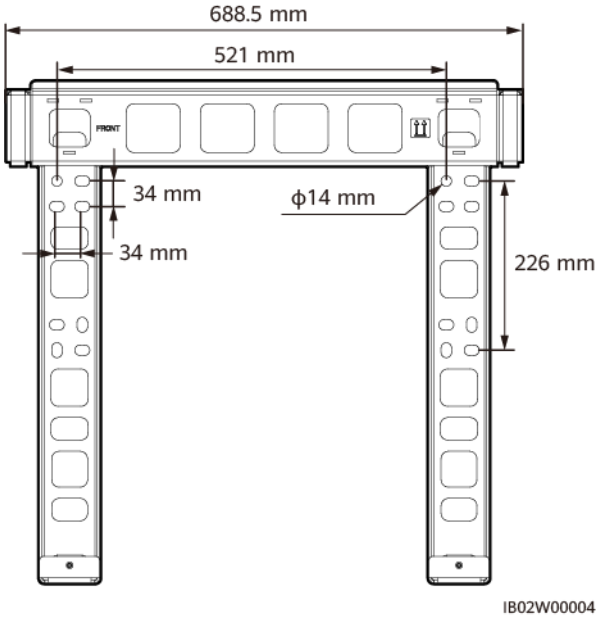

Procedure

Step 1 Install the mounting bracket.

Figure 4-18 Installing the mounting bracket

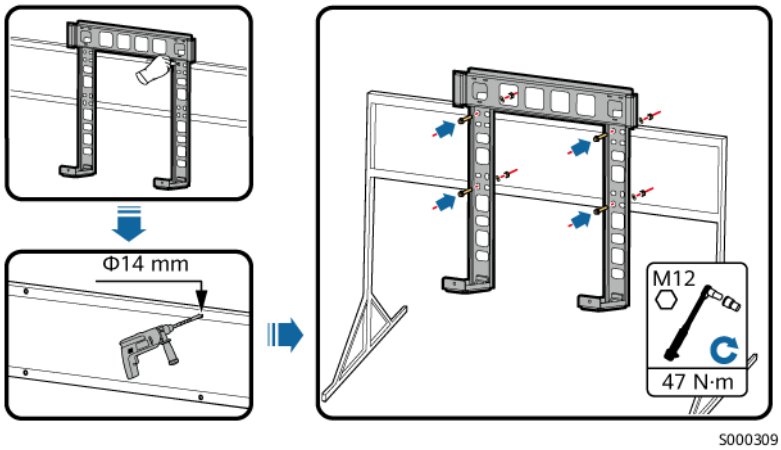

NOTE

If the bolt length does not meet the installation requirements, prepare M12 bolts and use them together with the delivered M12 nuts.

Step 2 Install the mounting ears.

Figure 4-19 Installing the mounting ears

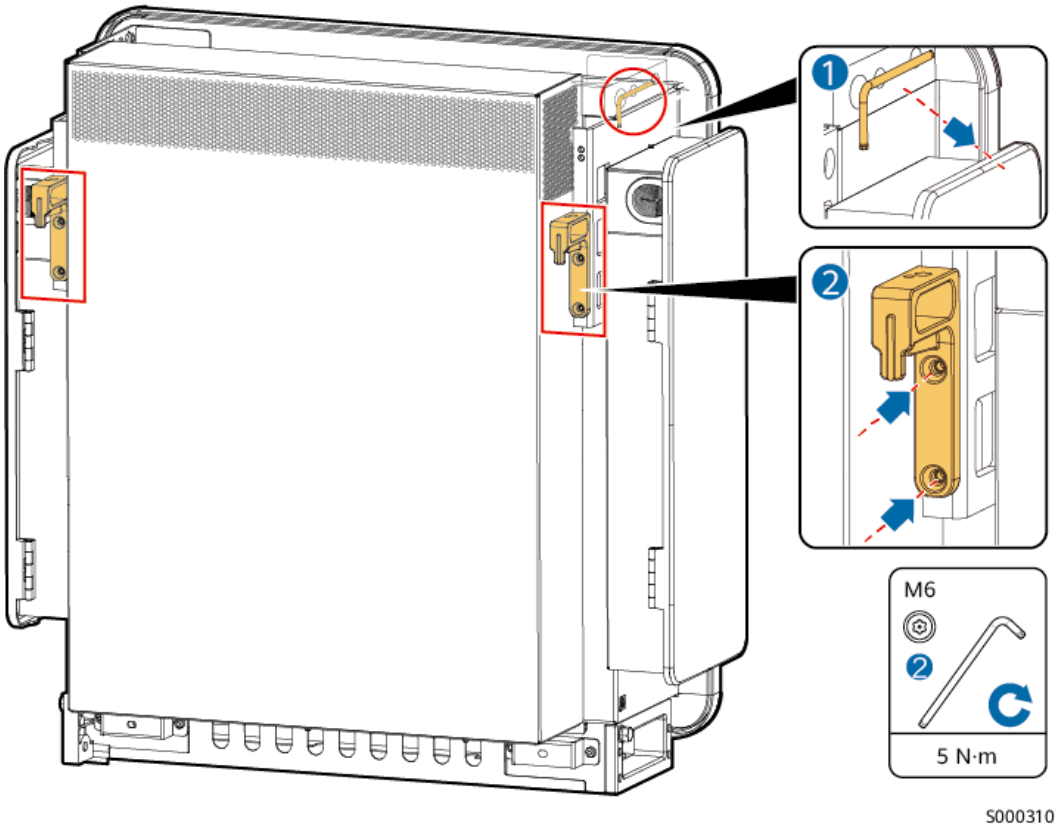

Step 3 (Optional) If the device needs to be moved manually, adjust the positions of the lifting handles at the bottom of the device.

Figure 4-20 Adjusting the positions of lifting handles

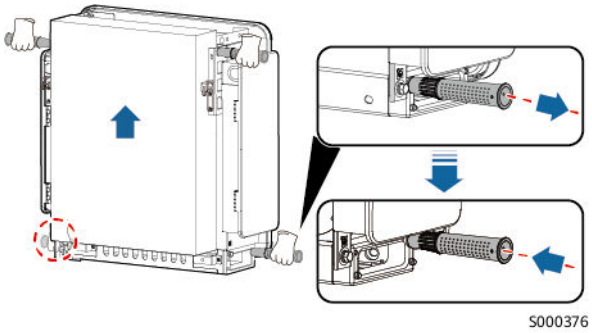

Step 4 Install the device on the mounting bracket.

Figure 4-21 Installing the device on the mounting bracket

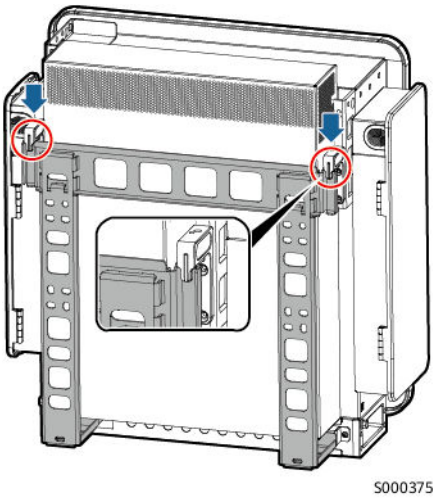

Step 5 Tighten the two screws at the bottom of the device.

Figure 4-22 Installing the Smart PCS

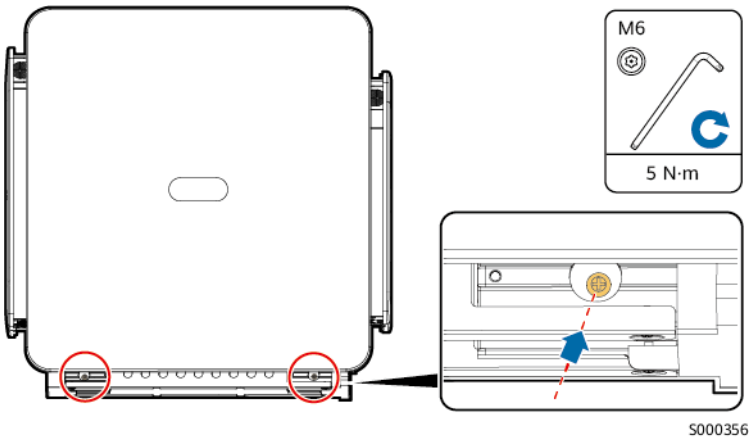

----End

5 Cable Installation

5.1 Precautions

DANGER

- Before connecting cables, ensure that the external switches on the AC and DC sides of the Smart PCS are off to disconnect all external connections of the Smart PCS. Otherwise, the high voltage of the device may cause electric shocks.
- The site must be equipped with qualified fire fighting facilities, such as fire sand and carbon dioxide fire extinguishers.
- Wear personal protective equipment and use dedicated insulated tools to avoid electric shocks or short circuits.

WARNING

- Device damage caused by incorrect cable connections is not covered by the product warranty.
- Only professional electrical technicians are allowed to perform electrical connection operations.
- Connect cables according to the wiring labels inside the device.
- Operation personnel must wear PPE when connecting cables.
- Before connecting cables to ports, leave enough slack to reduce the tension on the cables and prevent poor cable connections.

CAUTION

- Stay away from the equipment when preparing cables to prevent cable scraps from entering the equipment. Cable scraps may cause sparks and result in personal injury and equipment damage.

 Copyright © Huawei Technologies Co., Ltd.

NOTE

The cable colors shown in the electrical connection diagrams provided in this section are for reference only. Select cables in accordance with local cable specifications (green-and-yellow cables are only used for protective earthing). The factors that affect cable selection include the rated current, cable type, routing mode, ambient temperature, and maximum expected line loss.

5.2 Preparing Cables

Table 5-1 Cable description (S indicates the conductor cross-sectional area of the AC cable, and S_p indicates the conductor cross-sectional area of the PE cable)

Cable	Type		Conductor Cross-Sectional Area	Outer Diameter	Description
PE cable[1]	Base support-mounted	Single-core outdoor copper cable and M12 OT/DT terminal	$S_p \geq S/2$	-	Prepared by the customer. Select either the flat ground bar or PE cable.
		Flat ground bar: 40 mm x 4 mm hot-dip zinc-coated flat steel sheet	-	-	
		Grounding bracket	-	-	Delivered with the base support
	Rear bracket-mounted	Single-core outdoor copper cable and M10 OT/DT terminal	$S_p \geq S/2$	-	Prepared by the customer
DC power cable (multi-core)	Two-core outdoor cable and M12 OT/DT terminal		Recommended: 70–150 mm^2, maximum: 240 mm^2	30–64 mm	Prepared by the customer
DC power cable (single-core)	Single-core outdoor cable and M12 OT/DT terminal		Recommended: 70–150 mm^2, maximum: 240 mm^2	15–36 mm	
AC power cable (three-core)[2]	Three-core (L1, L2, L3) outdoor cable and M12 OT/DT terminal (L1, L2, L3)		70–240 mm^2	30–65 mm	Prepared by the customer

 Copyright © Huawei Technologies Co., Ltd.

Cable	Type	Conductor Cross-Sectional Area	Outer Diameter	Description
AC power cable (single-core)	Single-core outdoor cable and M12 OT/DT terminal	70–240 mm^2	15–35 mm	
Communications cable	FE/COM communications cable: CAT 5E outdoor shielded network cable and shielded RJ45 connector; internal resistance ≤ 1.5 ohms/10 m; material: oxygen-free copper or pure copper; bending radius ≥ 5 x Cable diameter	-	4.5–7.5 mm	The cable delivered with the device is 1.2 m long. You can also prepare a cable according to site requirements.
Note [1]: The S_p value is valid only if the conductors of the PE cable and AC power cable use the same material. If the materials are different, ensure that the conductor cross-sectional area of the PE cable produces a conductance equivalent to that specified in this table. The specifications of the PE cable are subject to this table or calculated according to IEC 60364-5-54. Note [2]: Do not use a four-core cable on the AC side. Use a three-core cable or three single-core cables.				

5.3 Installing a PE Cable

Precautions

- The grounding shall comply with the local electrical safety regulations.
- The PE point of the Smart PCS is located on its enclosure. The PE cable or grounding bracket must be connected to the PE point.
- The PE cable of the Smart PCS must be connected to a nearby ground point. Do not use a four-core cable to ground the AC side. The ground points of all Smart PCSs in the same array need to be connected to ensure equipotential bonding for PE cables.
- The resistance of a bond shall be less than or equal to 0.1 ohms.

Procedure

- Base support-mounted:

 Copyright © Huawei Technologies Co., Ltd.

NOTE

- Install the grounding brackets between the Smart PCSs and the base support on either the DC side or the AC side.
- There is one ground point on each side of the base support. It is recommended that both ground points be grounded.

– Method 1: Installing a PE cable

Figure 5-1 Installing a PE cable

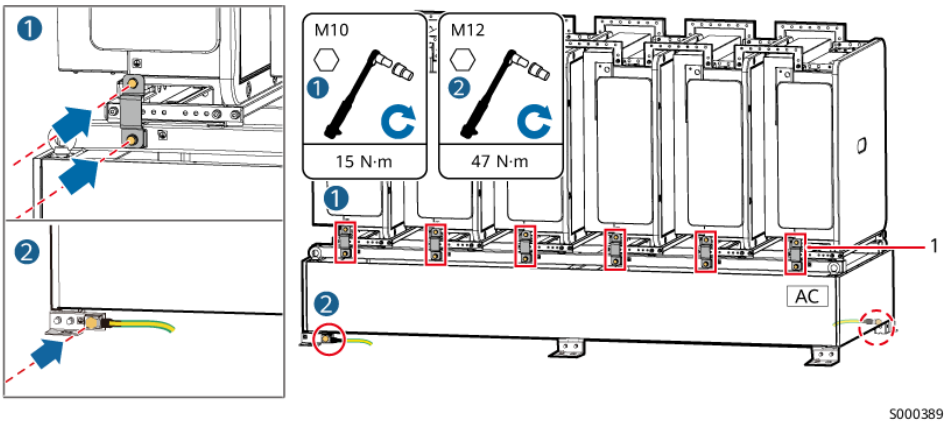

(1) Grounding bracket

– Method 2: Installing a flat ground bar

Connect a flat ground bar to the ground point of the base support.

NOTE

- You are advised to use the hot-dip zinc-coated flat steel sheet with a cross-sectional area of 40 mm x 4 mm.
- Before installation, remove the tinfoil from the flat ground bars.

Figure 5-2 Installing a flat ground bar

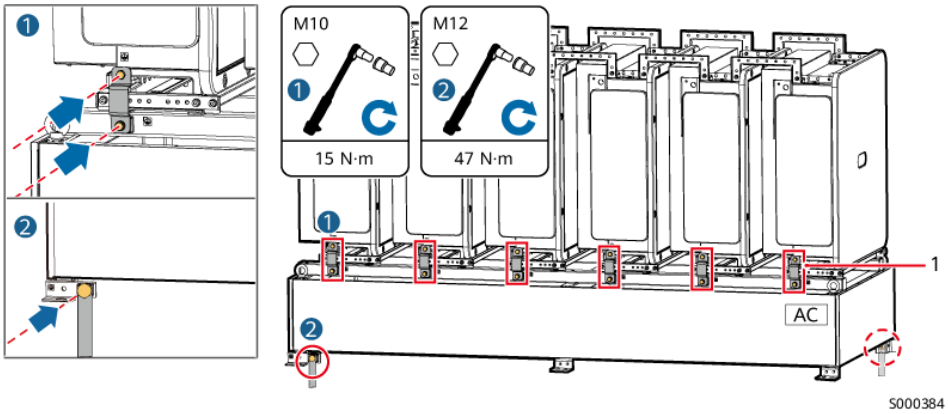

(1) Grounding bracket

Copyright © Huawei Technologies Co., Ltd.

- Rear bracket-mounted:

  Install the PE cable on either the AC side or the DC side.

Figure 5-3 Installing a PE cable

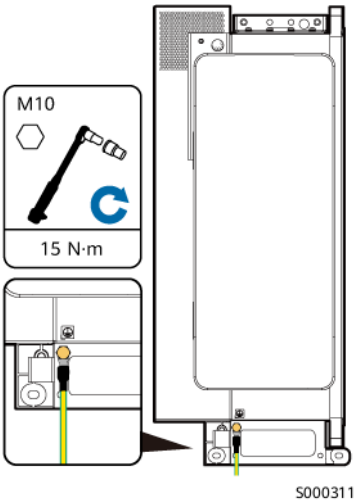

Follow-up Procedure

To enhance the corrosion resistance of a ground terminal, apply silicone grease or paint on it after connecting the PE cable.

5.4 Installing DC Power Cables

Precautions

Before connecting the DC power cables, check the following items:

- Ensure that the external switches on the DC and AC sides of the Smart PCS are turned off.
- Check the polarities of the cables and label them properly.

NOTICE

- The cable outer diameter can be measured using the ruler sticker in the maintenance compartment.
- Ensure that the cable jacket is in the maintenance compartment.
- Ensure that the DC power cables are connected securely. Otherwise, the Smart PCS may fail to operate, or be overheated in operation due to unreliable connection, which will damage the terminal block.
- When installing cables, ensure that the cables do not contact the screws in the maintenance compartment.
- Do not pull the cables horizontally after they have been secured, as this may damage the wiring terminals.

 Copyright © Huawei Technologies Co., Ltd.

Procedure

Step 1 Prepare the cables. For details, see **A Crimping an OT or DT Terminal**.

Step 2 Open the DC maintenance compartment door. Remove the accessories from the DC maintenance compartment and store them properly for future use.

NOTICE

- Do not open the panel of the Smart PCS.
- Before opening a maintenance compartment door of the Smart PCS, turn off the external switches on the AC and DC sides.
- Do not open the maintenance compartment door on rainy or snowy days. If you need to, take protective measures to prevent rain or snow from entering the maintenance compartment. If protective measures are unavailable, do not open the maintenance compartment door on rainy or snowy days.
- Do not leave unused screws in the maintenance compartment.

Figure 5-4 Opening the DC maintenance compartment door

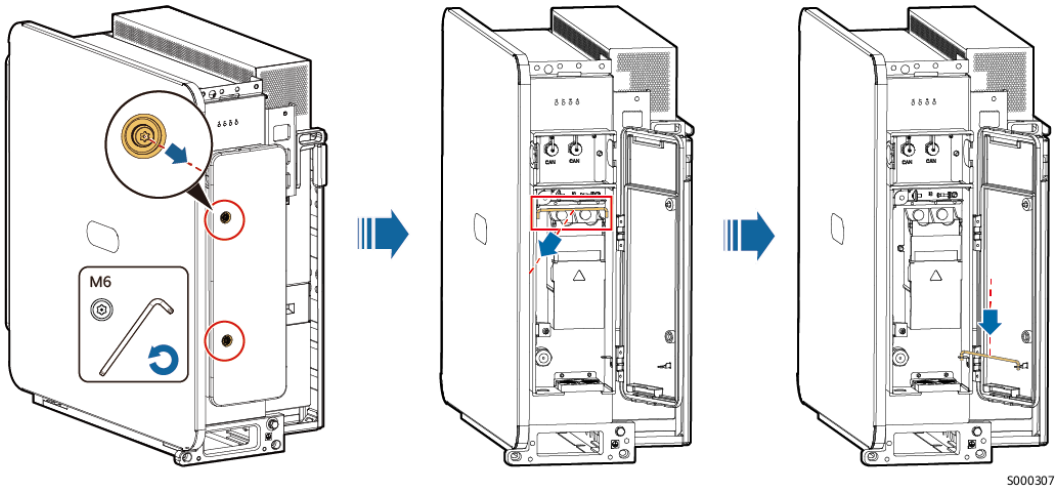

Step 3 Remove a rubber ring based on the cable diameter range. Cut off the joints between rubber rings using scissors and then remove the rubber ring. All rubber rings are removed in the same way.

NOTE

- Remove a rubber ring strictly based on the cable diameter range and ensure that the crimping module is not damaged. Otherwise, the IP rating of the device will be affected.
- If there is a gap between the cable and the rubber ring, prepare firestop putty by yourself and seal the gap. The firestop putty shall not contain corrosive elements such as sulfur and phosphorus. The holes and gaps shall be filled evenly and tightly.

Copyright © Huawei Technologies Co., Ltd.

Figure 5-5 Removing a rubber ring

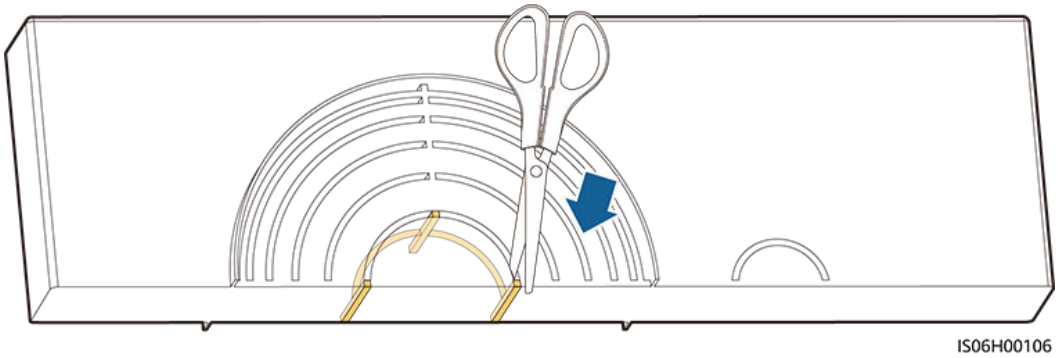

Step 4 Connect the DC power cables to the terminal block and ensure that the cables are securely connected.

Figure 5-6 Single-core cable connection

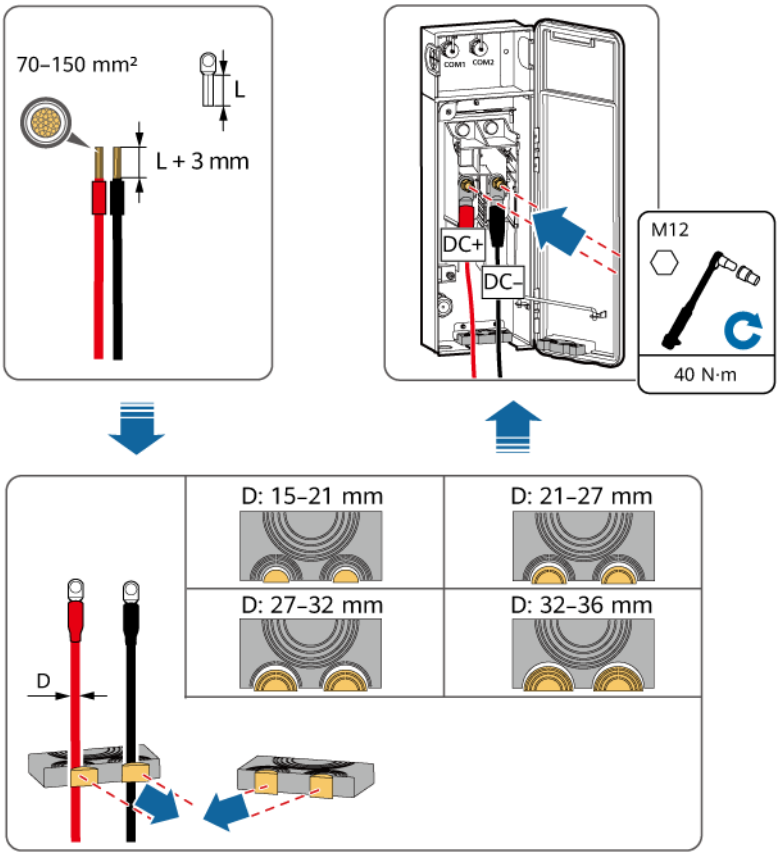

Figure 5-7 Multi-core cable connection

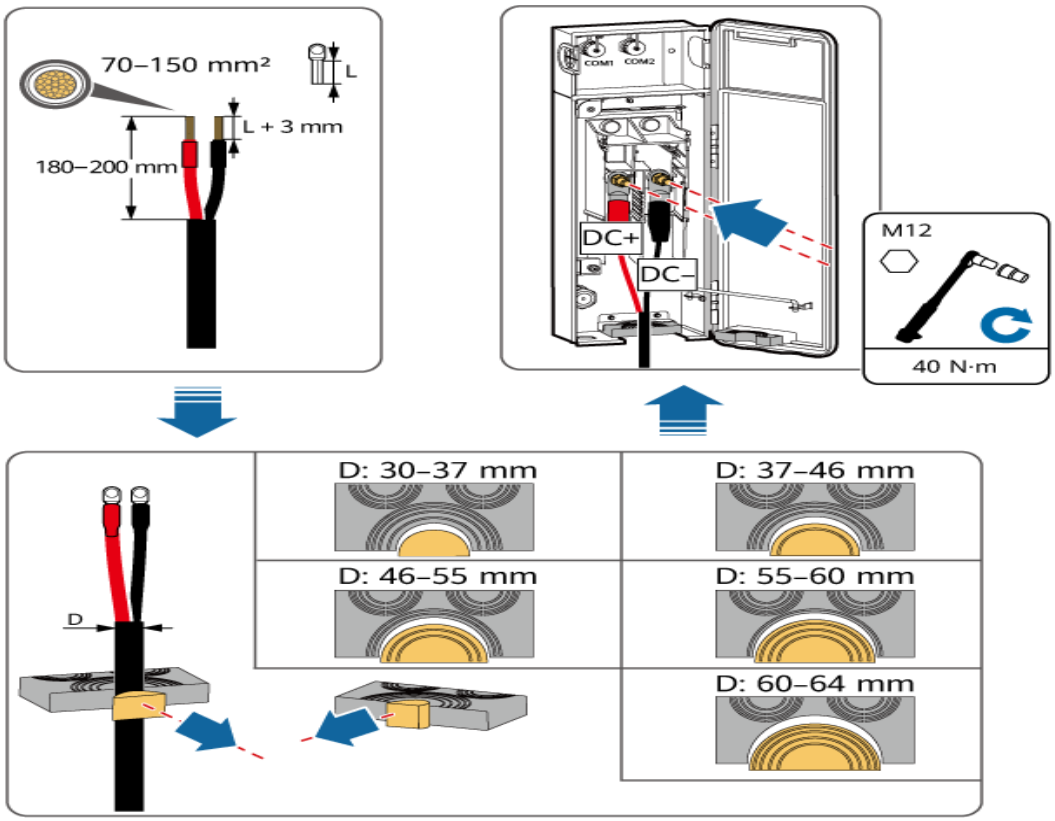

----End

5.5 Installing AC Power Cables

Precautions

A three-phase AC switch shall be installed on the AC side of the Smart PCS. To ensure that the Smart PCS can be safely disconnected from the power grid when an exception occurs, select a proper overcurrent protection device in compliance with local power distribution regulations.

WARNING

- Do not connect loads between a PCS and an AC switch that directly connects to the PCS. Otherwise, the switch may trip by mistake.
- If an AC switch is used with specifications beyond local standards, regulations, or the Company's recommendations, the switch may fail to turn off in a timely manner in case of exceptions, causing serious faults.

Copyright © Huawei Technologies Co., Ltd.

CAUTION

Each Smart PCS must be equipped with an AC output switch. If this requirement cannot be met, a maximum of two Smart PCSs can be connected to one AC output switch.

NOTICE

- The cable outer diameter can be measured using the ruler sticker in the maintenance compartment.
- If a cable has a jacket, ensure that the jacket is in the maintenance compartment.
- Ensure that the AC power cables are connected securely. Otherwise, the Smart PCS may fail to operate, or be overheated in operation due to unreliable connection, which will damage the terminal block.
- When installing cables, ensure that the cables do not contact the screws in the maintenance compartment.
- Do not pull the cables horizontally after they have been secured, as this may damage the wiring terminals.
- The AC power cables to all Smart PCSs in an array shall be connected in the sequence of L1, L2, and L3. The phase sequence shall be consistent with that of the transformer station.

Step 1 Prepare cables by referring to the section **Crimping an OT or DT Terminal**.

Step 2 Open the AC maintenance compartment door. Remove the accessories from the DC maintenance compartment and store them properly for future use.

NOTICE

- Do not open the panel of the Smart PCS.
- Before opening a maintenance compartment door of the Smart PCS, turn off the external switches on the AC and DC sides.
- Do not open the maintenance compartment door on rainy or snowy days. If you need to, take protective measures to prevent rain or snow from entering the maintenance compartment. If protective measures are unavailable, do not open the maintenance compartment door on rainy or snowy days.
- Do not leave unused screws in the maintenance compartment.

 Copyright © Huawei Technologies Co., Ltd.

Figure 5-8 Opening the AC maintenance compartment door

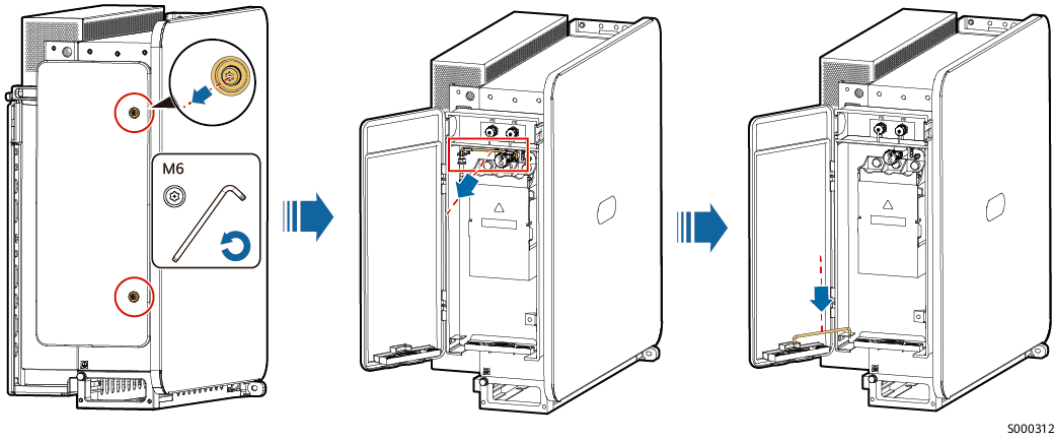

Step 3 Remove a rubber ring based on the cable diameter range. Cut off the joints between rubber rings using scissors and then remove the rubber ring. All rubber rings are removed in the same way.

NOTE

- Remove a rubber ring strictly based on the cable diameter range and ensure that the crimping module is not damaged. Otherwise, the IP rating of the device will be affected.
- If there is a gap between the cable and the rubber ring, prepare firestop putty by yourself and seal the gap. The firestop putty shall not contain corrosive elements such as sulfur and phosphorus. The holes and gaps shall be filled evenly and tightly.

Figure 5-9 Removing a rubber ring

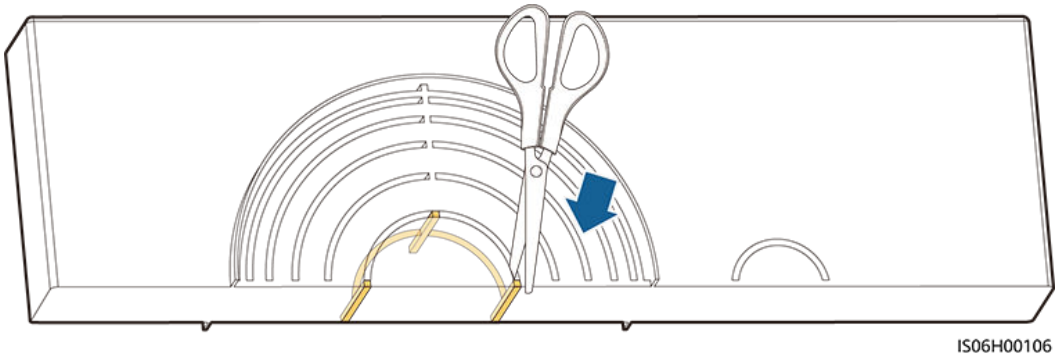

Step 4 Connect the AC power cables to the terminal block and ensure that the cables are securely connected.

NOTE

The cable colors shown in the figures are for reference only. Select an appropriate cable according to the local standards.

Figure 5-10 Single-core cable connection

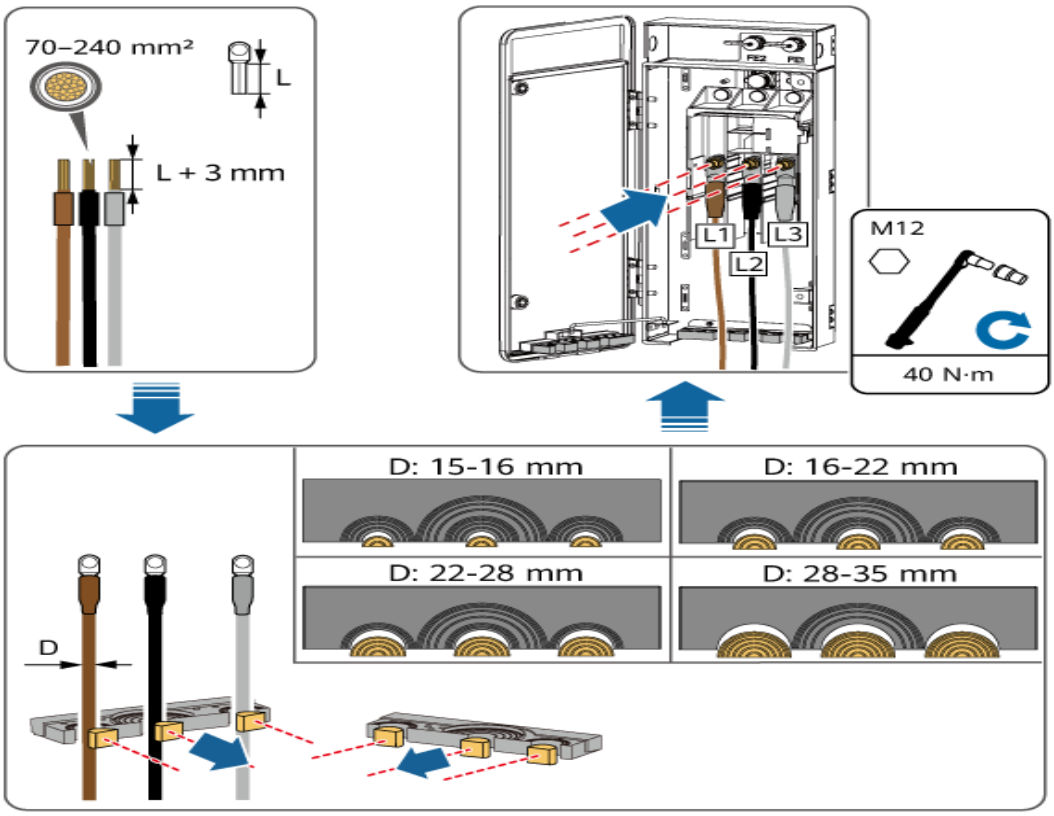

Figure 5-11 Multi-core cable connection

NOTE

It is recommended that the stripped length of the L2 wire be 15 mm shorter than that of the L1 or L3 wire.

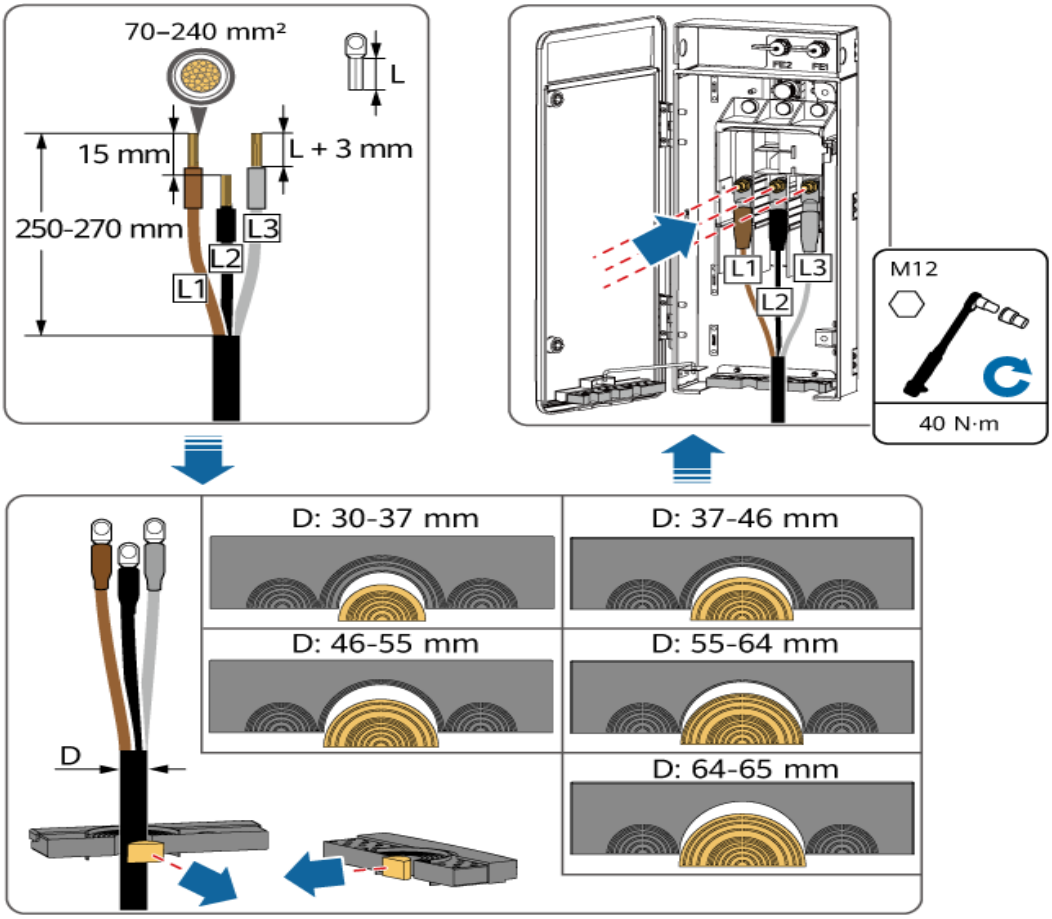

----End

5.6 Installing Communications Cables

To ensure normal communication, install cables to both FE and COM communications ports.

NOTICE

- For FE communications ports, all Smart PCSs need to be connected in a ring network in hand-in-hand mode using FE communications cables.
- For COM communications ports, if one battery rack corresponds to one Smart PCS, the Smart PCS is directly connected to the ESS. If one battery rack corresponds to multiple Smart PCSs, these Smart PCSs need to be connected in hand-in-hand mode using COM communications cables.
- The communications cables delivered with the Smart PCS are 1.2 m long. Use the original cables if possible.

Copyright © Huawei Technologies Co., Ltd.

Communications Ports

Figure 5-12 Port description

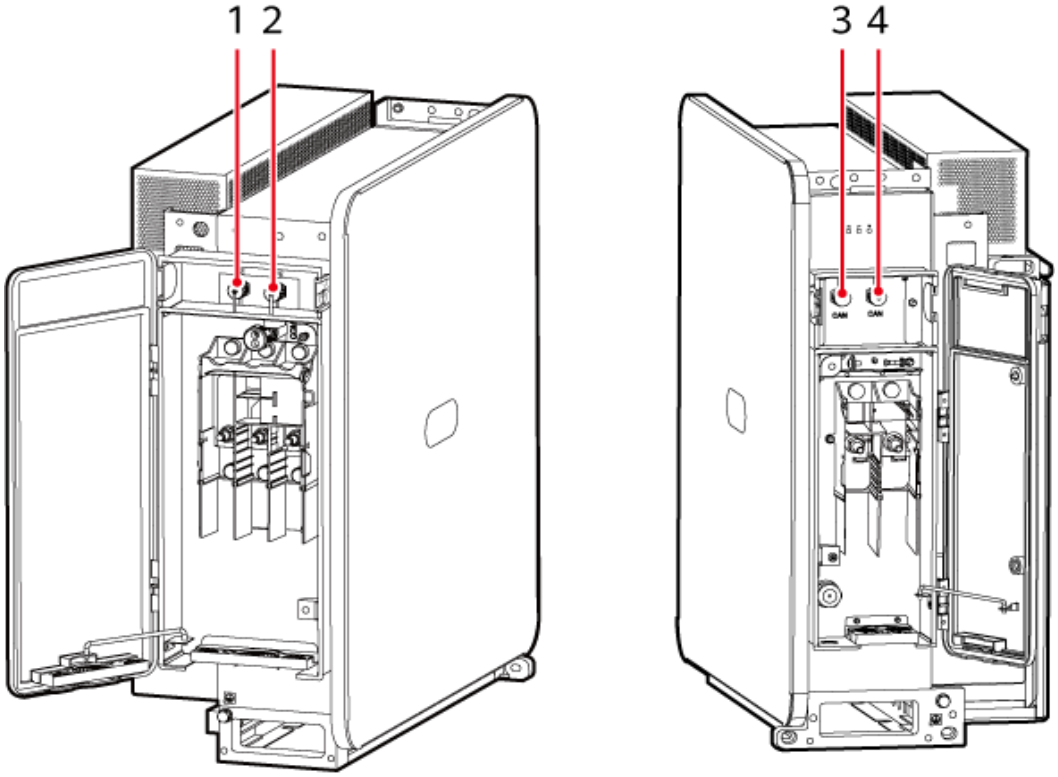

(1) FE network port 2

(2) FE network port 1

(3) COM network port 1

(4) COM network port 2

5.6.1 Installing FE Communications Cables

The Smart PCSs connect to the SACU (model: SmartACU2000D-D-11) over FE communications cables. Ensure that the two ends connect to the GE2–GE8 ports of the SACU (SWITCH02). A maximum of three ring networks are supported.

Figure 5-13 Connecting FE communications cables (to the SmartACU2000D-D-11)

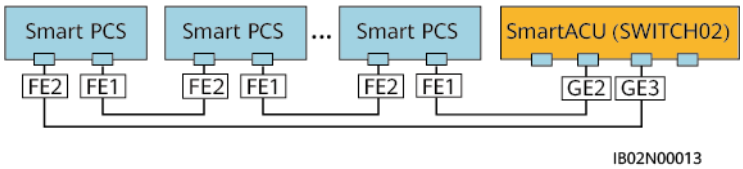

Procedure

Step 1 (Optional) Prepare a network cable.

NOTE

If the length of the delivered cable does not meet the requirement, prepare a network cable by yourself or use the delivered connector and a cable prepared by yourself to crimp a network cable.

- Preparing a network cable by yourself

CAUTION

If you prepare a network cable by yourself, choose a network cable with shielded RJ45 connectors and without injection molding jackets.

Figure 5-14 Network cable

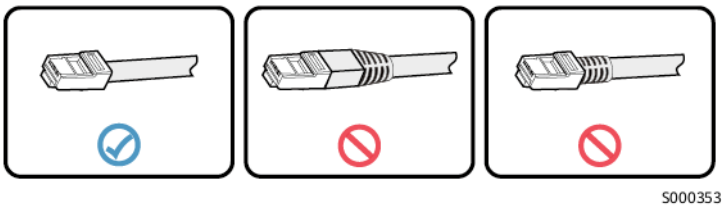

- Crimping a network cable
  a. Remove an appropriate length of the insulation layer from the shielded network cable using a wire stripper.
  b. Arrange the wires of the stripped shielded network cable in the correct sequence and insert them into the shielded plug of the RJ45 connector. Use the RJ45 connector crimping tool to crimp the shielded plug.

Figure 5-15 RJ45 connector wiring

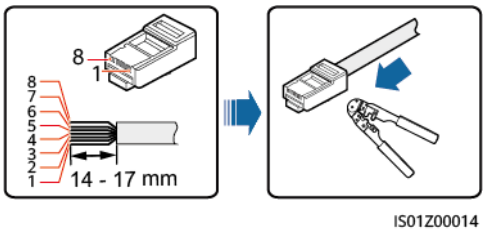

(1) White-and-orange	(2) Orange	(3) White-and-green	(4) Blue
(5) White-and-blue	(6) Green	(7) White-and-brown	(8) Brown

Step 2 Insert the plug through the sealing nut, sealing ring, coupling nut, and plastic housing in sequence.

Figure 5-16 Connecting a plastic housing

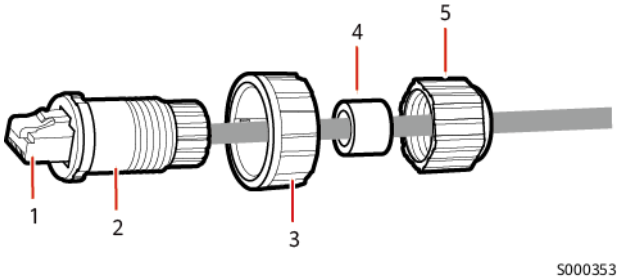

(1) Shielded plug	(2) Plastic housing	(3) Coupling nut
(4) Sealing ring	(5) Sealing nut	-

Step 3 Insert the sealing ring into the plastic housing and secure the coupling nut to the plastic housing.

Figure 5-17 Connecting a sealing ring and a coupling nut

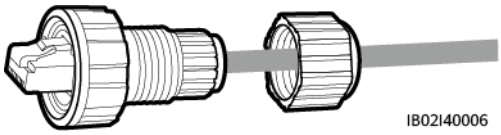

Step 4 Secure the sealing nut to the plastic housing.

Figure 5-18 Connecting a sealing nut

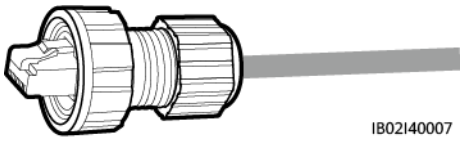

NOTICE

Ensure that the sealing nut is secured.

Step 5 Route the FE1 cable through the cable hole on the left and the FE2 cable through the cable hole on the right. Insert the plugs into the FE ports on the Smart PCS and tighten the coupling nuts.

 Copyright © Huawei Technologies Co., Ltd.

Figure 5-19 Connecting FE Communications Cables

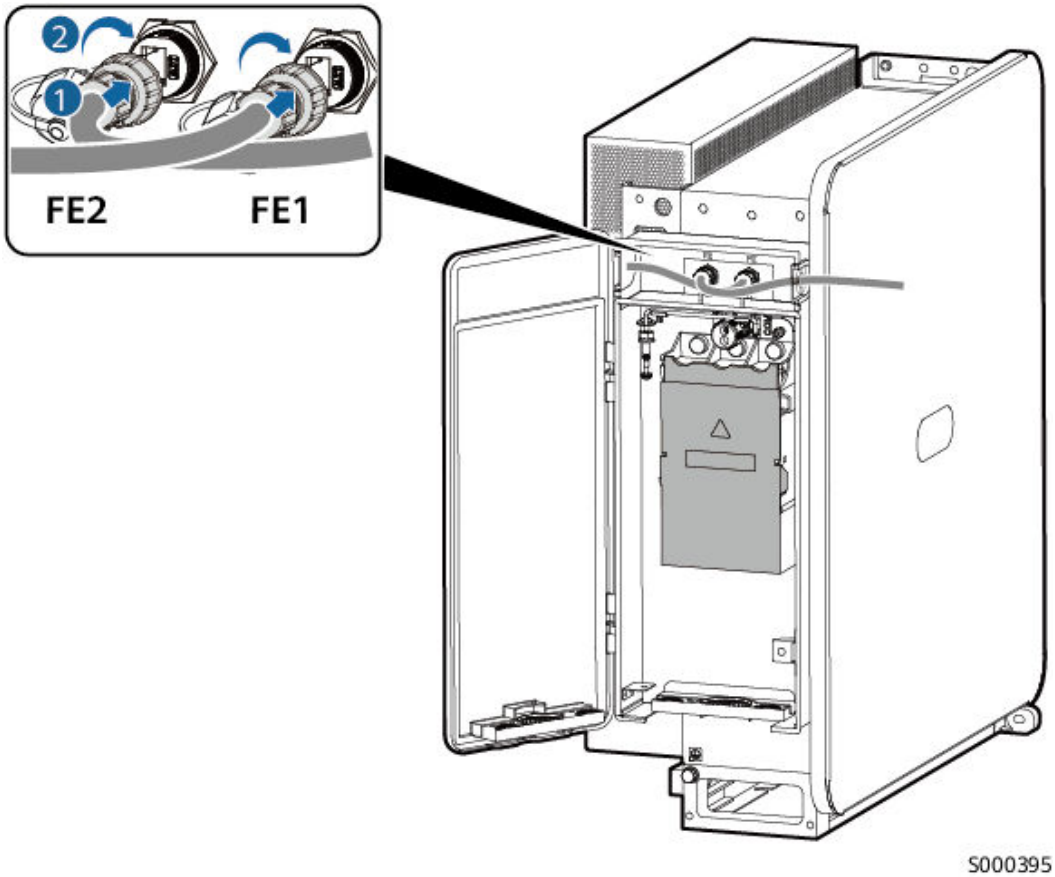

Step 6 Bind the FE communications cables in the AC maintenance compartment.

Figure 5-20 Binding the FE communications cables

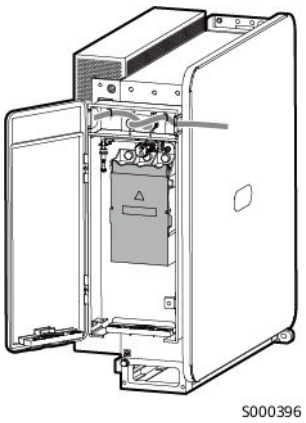

Step 7 Retract the support bar, close the maintenance compartment door, and tighten the two screws on the door.

NOTICE

- Before closing a maintenance compartment door, check that the cables are connected correctly and securely, close the terminal block cover, and remove any foreign object from the maintenance compartment.
- If a screw on the maintenance compartment door is lost, obtain a spare screw from the accessory bag in the maintenance compartment.

Figure 5-21 Closing the AC maintenance compartment door

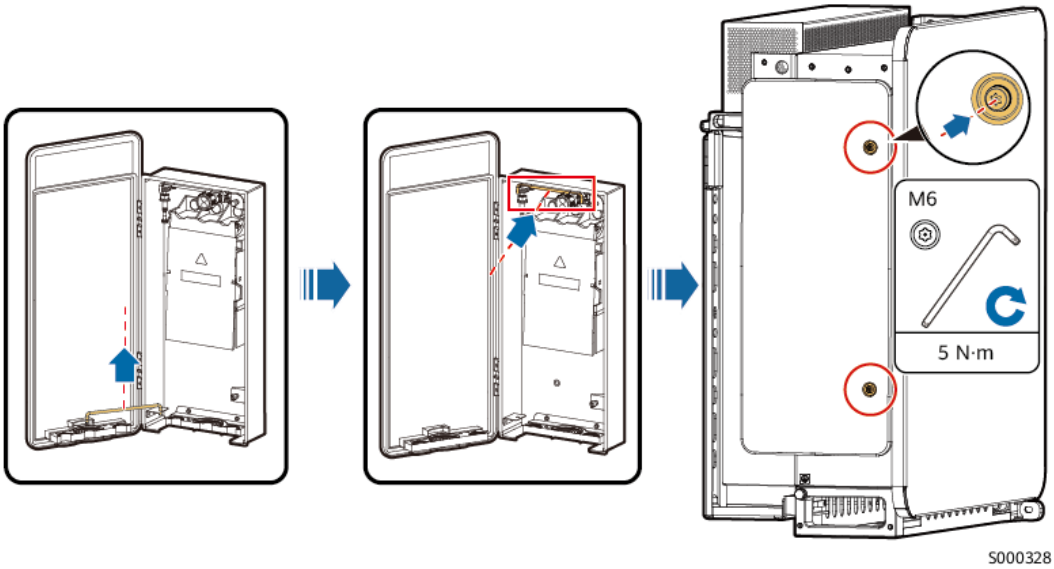

Step 8 Bind the FE communications cables connecting to the SACU at proper positions near the ports.

If the Smart PCS is mounted on a base support, bind the cables according to the figure.

Copyright © Huawei Technologies Co., Ltd.

Figure 5-22 Binding FE communications cables

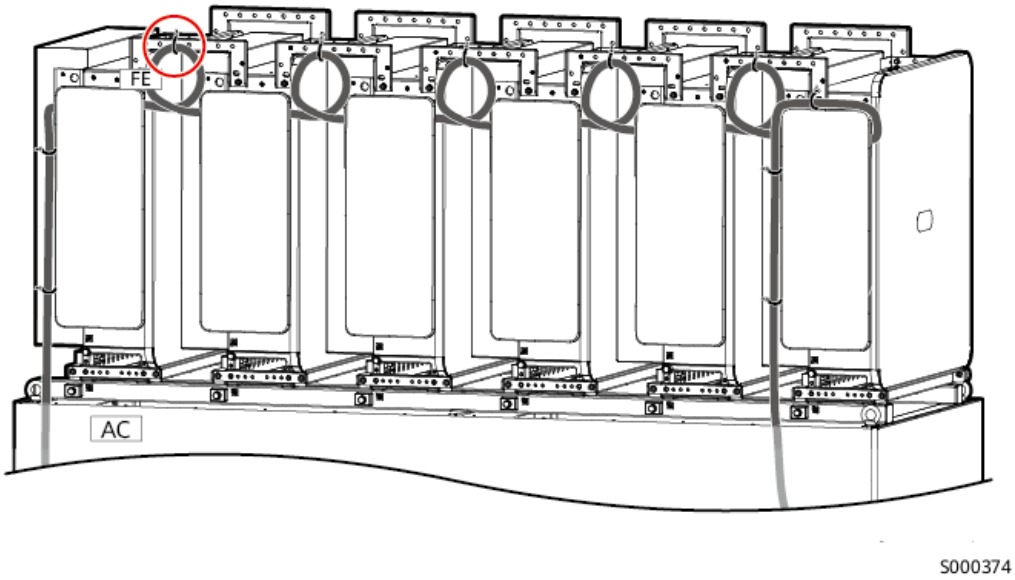

----End

5.6.2 Installing COM Communications Cables

Context

- The COM communications port transmits CAN signals and dry contact protection signals.
- CAN and dry contacts establish a channel for communication between the Smart PCS and the ESS battery rack and for fast protection. If the ESS is faulty, the Smart PCS will receive a shutdown command immediately.
- If one battery rack corresponds to one Smart PCS, the Smart PCS is directly connected to the ESS. If one battery rack corresponds to multiple Smart PCSs, these Smart PCSs need to be connected in hand-in-hand mode.

Figure 5-23 Connection for one Smart PCS per battery rack

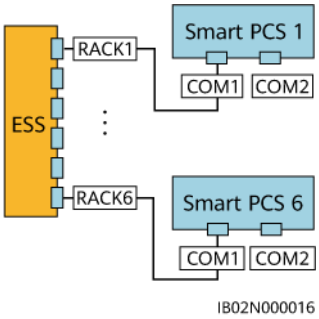

Figure 5-24 Connection for two Smart PCSs per battery rack

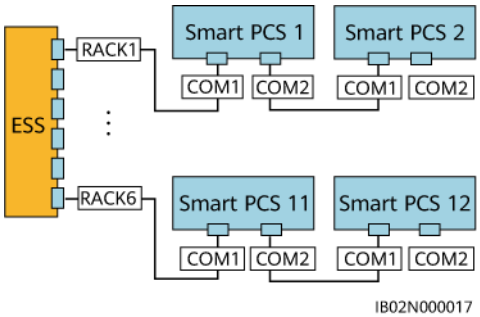

Figure 5-25 Connection for four Smart PCSs per battery rack

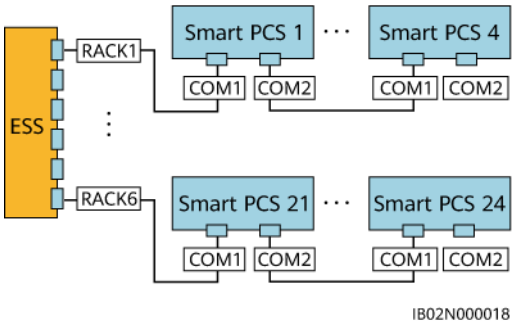

Communications Port Pin Definitions

Figure 5-26 Communications port

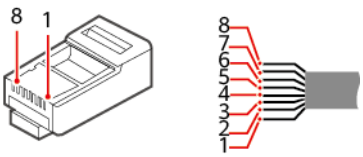

Table 5-2 CAN and dry contact pin definitions

Pin	Definition	Description
1	-	-
2	-	-
3	-	-
4	FAST IO+	Dry contact DI+
5	FAST IO-	Dry contact DI–
6	-	-
7	CAN L	CAN communication between the ESS and the Smart PCS
8	CAN H	CAN communication between the ESS and the Smart PCS

 Copyright © Huawei Technologies Co., Ltd.

NOTE

Dry contact protection logic: The external contact is closed by default. If the external contact is open, an alarm is generated and the Smart PCS shuts down automatically.

Procedure

Step 1 (Optional) Prepare a network cable.

NOTE

If the length of the delivered cable does not meet the requirement, prepare a network cable by yourself or use the delivered connector and a cable prepared by yourself to crimp a network cable.

- Preparing a network cable by yourself

CAUTION

If you prepare a network cable by yourself, choose a network cable with shielded RJ45 connectors and without injection molding jackets.

Figure 5-27 Network cable

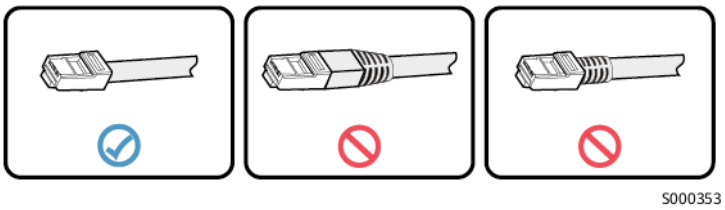

- Crimping a network cable
  a. Remove an appropriate length of the insulation layer from the shielded network cable using a wire stripper.
  b. Arrange the wires of the stripped shielded network cable in the correct sequence and insert them into the shielded plug of the RJ45 connector. Use the RJ45 connector crimping tool to crimp the shielded plug.

Figure 5-28 RJ45 connector wiring

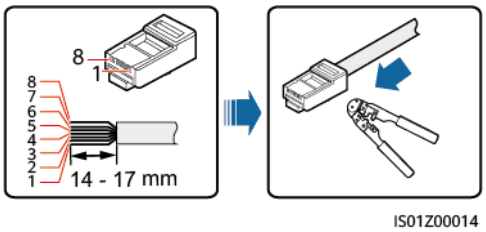

(1) White-and-orange (2) Orange (3) White-and-green (4) Blue

Copyright © Huawei Technologies Co., Ltd.

(5) White-and-blue	(6) Green	(7) White-and-brown	(8) Brown

Step 2 Insert the plug through the sealing nut, sealing ring, coupling nut, and plastic housing in sequence.

Figure 5-29 Connecting a plastic housing

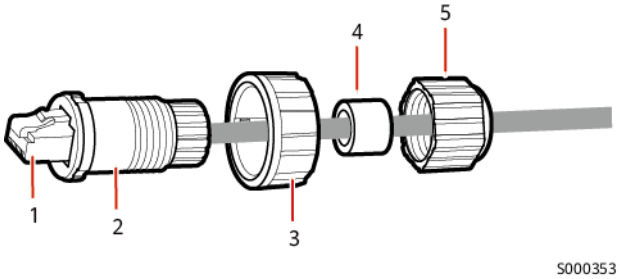

(1) Shielded plug	(2) Plastic housing	(3) Coupling nut
(4) Sealing ring	(5) Sealing nut	-

Step 3 Insert the sealing ring into the plastic housing and secure the coupling nut to the plastic housing.

Figure 5-30 Connecting a sealing ring and a coupling nut

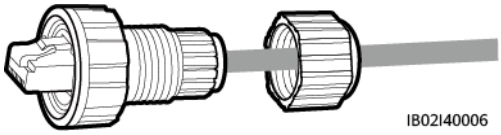

Step 4 Secure the sealing nut to the plastic housing.

Figure 5-31 Connecting a sealing nut

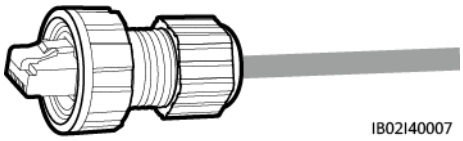

NOTICE

Ensure that the sealing nut is secured.

Step 5 Insert the plugs into the COM ports on the Smart PCS and tighten the coupling nuts.

Figure 5-32 Connecting COM communications cables

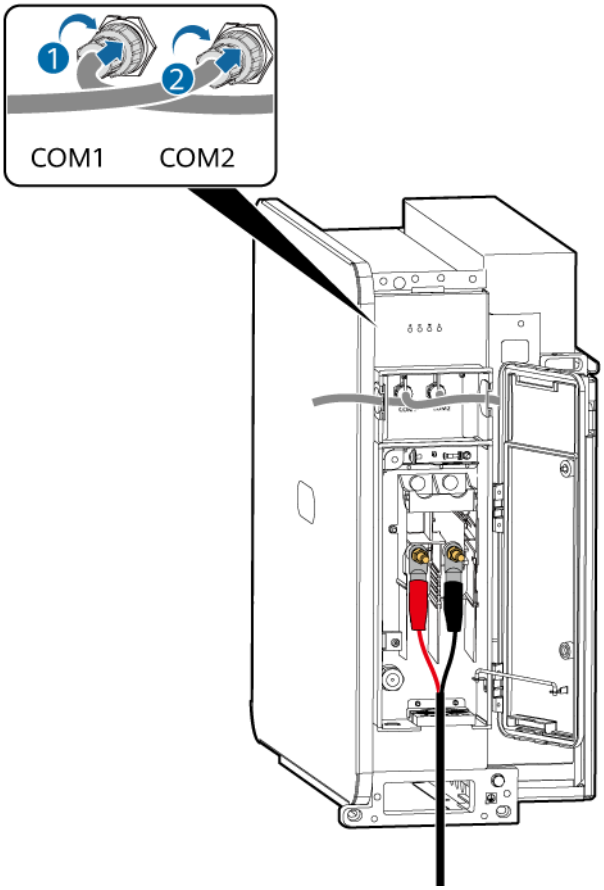

Step 6 Bind the COM communications cables in the DC maintenance compartment.

Figure 5-33 Binding the COM communications cables

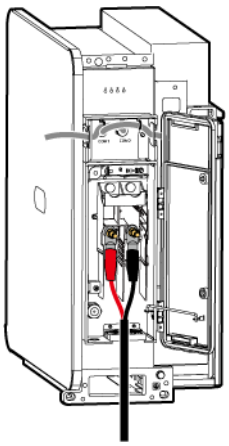

Step 7 Retract the support bar, close the maintenance compartment door, and tighten the two screws on the door.

NOTICE

- Before closing a maintenance compartment door, check that the cables are connected correctly and securely, close the terminal block cover, and remove any foreign object from the maintenance compartment.
- If a screw on the maintenance compartment door is lost, obtain a spare screw from the accessory bag in the maintenance compartment.

Figure 5-34 Closing the DC maintenance compartment door

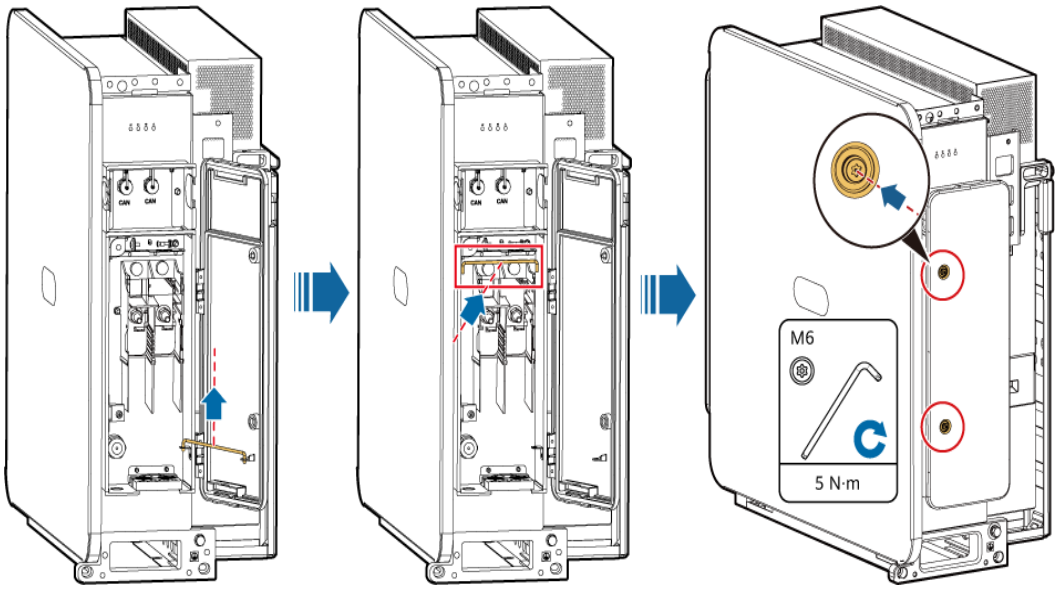

Step 8 Bind the COM communications cables connecting to the ESS at proper positions near the ports.

If the Smart PCS is mounted on a base support, bind the cables according to the figure.

Copyright © Huawei Technologies Co., Ltd.

Figure 5-35 Cable binding for one Smart PCS per battery rack

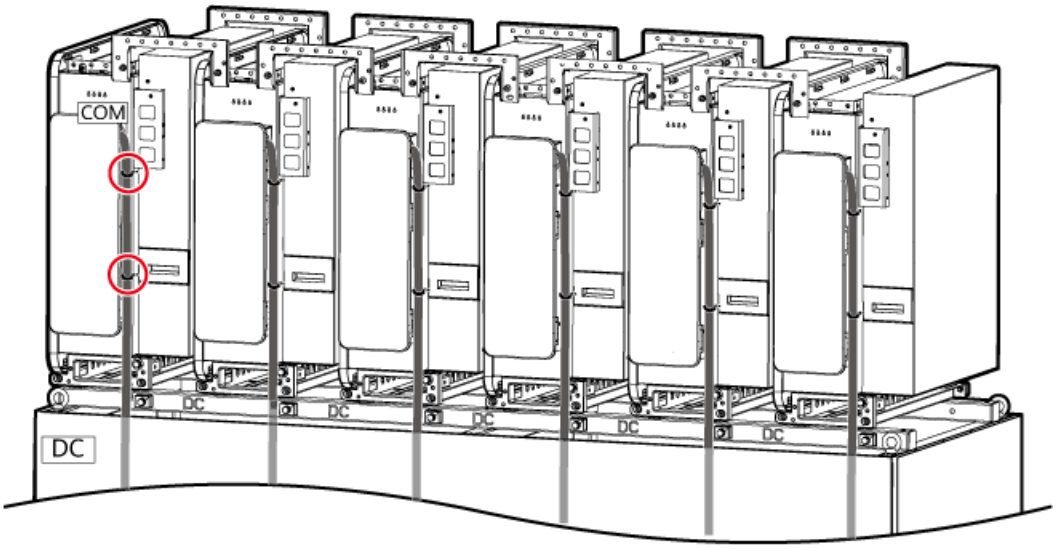

Figure 5-36 Cable binding for two Smart PCSs per battery rack

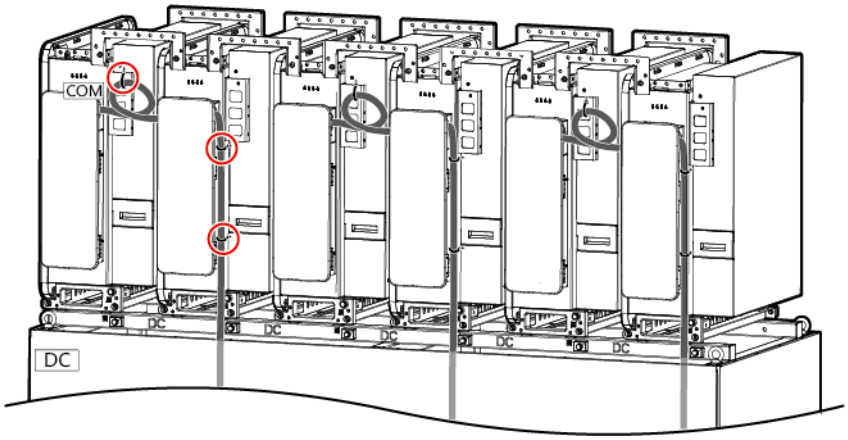

Figure 5-37 Cable binding for four Smart PCSs per battery rack

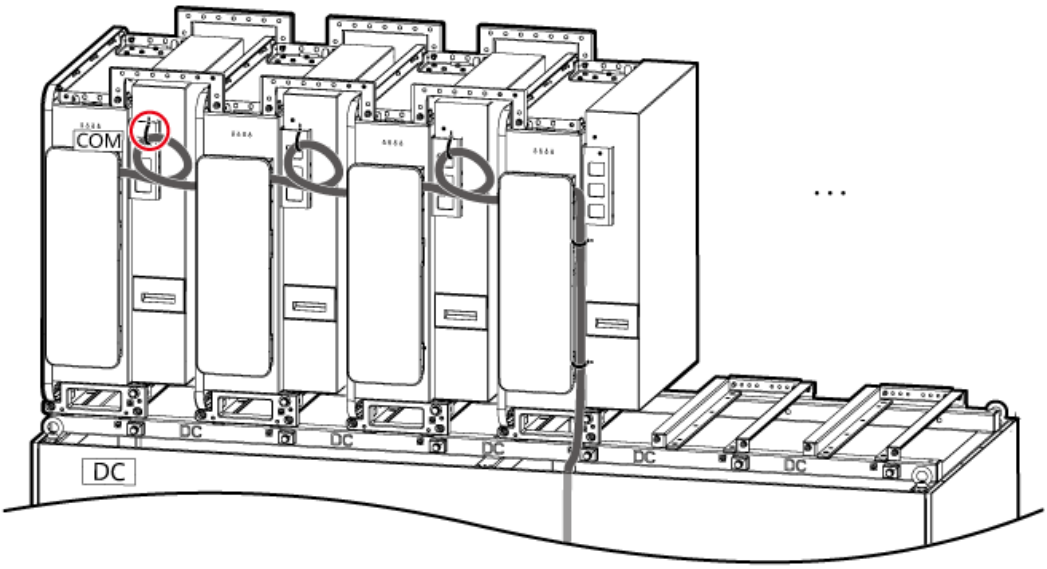

----End

6 Check Before Power-On

Check the items listed in the following table. In case of any nonconforming items, rectify the fault and reinstall the parts. Then, check the items listed in the following table again until all the items pass the check.

Table 6-1 Checklist

Check Item	Acceptance Criteria
Installation checks	The Smart PCS is not deformed or damaged.
	The Smart PCS is installed properly.
	The clearance around the Smart PCS meets requirements.
Electrical connection checks	The external switches on the AC and DC sides are in the **OFF** position.
	All cables are intact and free from any damage or cracks.
	All ground cables are connected securely and reliably.
	All AC power cables are connected correctly and securely in the correct phase sequence, and no open circuits or short circuits occur.
	All DC power cables are connected securely in correct polarity, and no open circuits or short circuits occur.
	The communications cables are connected correctly and securely.
Other check items	The crimping module is installed securely.
	The AC maintenance compartment is clean and tidy.
	The DC maintenance compartment is clean and tidy.
	The AC maintenance compartment door is closed and the screws on the door are tightened.
	The DC maintenance compartment door is closed and the screws on the door are tightened.

 Copyright © Huawei Technologies Co., Ltd.

Check Item	Acceptance Criteria
	The waterproof plugs on the unused USB, COM, and FE ports are secured.

 Copyright © Huawei Technologies Co., Ltd.

7 Power-On and Commissioning

7.1 Powering On the Smart PCS

Prerequisites

- Ensure that all the items in **6 Check Before Power-On** are checked and meet the requirements before power-on.

Precautions

DANGER

- Wear personal protective equipment and use dedicated insulated tools to avoid electric shocks or short circuits.

NOTICE

- Before turning on the AC switch between the Smart PCS and the power grid, check whether the AC voltage is within the allowed range using a multimeter. (See the local power grid standard.)
- Before the equipment is put into operation for the first time, ensure that the parameters are set correctly by professional personnel. Incorrect parameter settings may result in noncompliance with local grid connection requirements and affect the normal operations of the equipment.
- If the Smart PCS has not been used for six months or longer after being installed, it must be checked and tested by professionals before operation.

Procedure

Step 1 Turn on the AC switch between the AC side of the Smart PCS and the transformer station.

 Copyright © Huawei Technologies Co., Ltd.

NOTICE

The recommended specifications for the AC switch between the AC side of the Smart PCS and the transformer station are as follows. Select a power distribution switch that complies with local regulations based on actual application scenarios.

- Three-phase AC switch
- Rated voltage ≥ 800 V AC
- Rated current ≥ 200 A
- Breaking capacity > Short-circuit current on the transformer PCS side; recommended: ≥ 10 kA. For example, if the rated capacity of the transformer is 3300 kVA and the short-circuit impedance is 7.8%, the short-circuit current is about 30.5 kA.

Step 2 Turn on the DC switch between the DC side of the Smart PCS and the ESS.

NOTICE

The recommended specifications for the DC switch between the DC side of the Smart PCS and the ESS are as follows. Select a power distribution switch that complies with local regulations based on actual application scenarios.

- DC switch
- Rated voltage ≥ 1500 V DC
- Rated current ≥ 250 A
- Breaking capacity > Short-circuit current on the ESS DC side; recommended: ≥ 10 kA

Step 3 Check that the DC voltage is within the normal range on the FusionSolar app.

Step 4 Send a startup command on the FusionSolar app, SmartLogger, or management system, and wait for the system soft start.

Step 5 Observe the LED indicators to check the running status of the Smart PCS.

Table 7-1 LED indicator description

No.	Category	Status (Blinking Fast: On for 0.2s and Off for 0.2s; Blinking Slowly: On for 1s and Off for 1s)	Meaning
1	DC indication	Steady green	The DC side is properly connected, and the auxiliary power supply inside the device is working.
		Blinking green slowly	The device is in standby or wiring inspection state.
		Blinking red fast	An environmental fault occurred on the DC side.

 Copyright © Huawei Technologies Co., Ltd.

No.	Category	Status (Blinking Fast: On for 0.2s and Off for 0.2s; Blinking Slowly: On for 1s and Off for 1s)	Meaning
		Off	The DC side is not properly connected, or the auxiliary power supply inside the device is not working.
2	Running indication	Steady green	The device is operating in grid-tied mode.
		Steady yellow	The device is operating in off-grid mode.
		Blinking green slowly	The system environment is normal but the device is not in the working state.
		Blinking red fast	An environmental fault occurred on the AC side.
		Off	The AC side is not connected to the power grid.
3	Communication indication	Blinking green fast	The device receives data through northbound FE communication.
		Off	The device has not received data through northbound FE communication in at least 10s.
4	Fault/ Maintenance indication	Steady red	A major alarm was generated on the device.
		Blinking red fast	A minor alarm was generated on the device.
		Blinking red slowly	A warning was generated on the device.
		Blinking green slowly	The device is under local maintenance or shut down after receiving a command.
		Off	There is no alarm, and no local maintenance operations are performed.

----End

7.2 Commissioning the Smart PCS

The Smart PCS is commissioned together with the whole energy storage solution and can be commissioned on the SmartLogger WebUI or FusionSolar app.

- SmartLogger WebUI: The SmartLogger can manage multiple devices. For details about the commissioning procedure, see the quick guide for the corresponding solution.

- FusionSolar app: The app is used for local commissioning, mainly to modify the parameters and upgrade the software version of a single Smart PCS. For details, see the **FusionSolar App and SUN2000 App Device Commissioning Guide**.

For details about how to set the hot standby mode during Smart PCS commissioning, see **7.3 Setting the Hot Standby Mode**.

7.3 Setting the Hot Standby Mode

Context

The hot standby mode applies to only on-grid scenarios and does not apply to off-grid and on/off-grid scenarios.

Procedure

Step 1 Log in to the SmartLogger WebUI.

Step 2 Choose **Deployment Wizard** > **Connect Device** , and click **Next**.

Step 3 On **The subarray hot standby mode**, set the hot standby mode parameter as required and click **Settings**.

Figure 7-1 Setting the hot standby mode

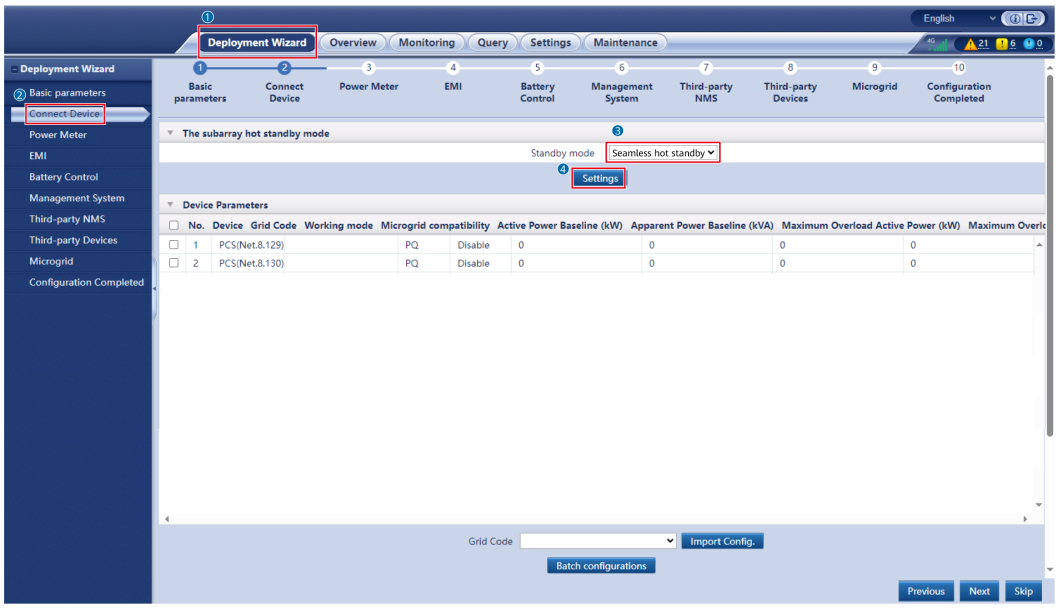

Table 7-2 Hot standby mode parameter settings

Parameter	Description	Entry/Exit Condition	Application Scenario
Zero-power operation	No hot standby. The Smart PCS is operating with zero power. The Smart PCS responds in real time after receiving a power scheduling command.	-	Scenarios where fast response to power scheduling is required, such as frequency regulation scenarios.
Seamless hot standby	After the Smart PCS enters the hot standby state, the PWM wave transmission is stopped, but the grid-tied relay on the AC side is not disconnected. If the Smart PCS receives the power scheduling command, it takes about 10 ms to exit the hot standby mode and respond to the power scheduling. In the seamless hot standby scenario, the AC port of the Smart PCS generates a certain amount of reactive power. The system automatically selects a certain number of Smart PCSs to compensate for the system reactive power. In this scenario, the no-load loss of the Smart PCS is very low.	• Delayed entry after the power scheduling instruction is 0. • Exit after receiving a non-zero power scheduling command.	Scenarios where low standby loss and fast response to power scheduling are required, such as peak shaving and frequency regulation scenarios.

----End

8 Device Maintenance

8.1 Routine Maintenance

Precautions

DANGER

- Wear personal protective equipment and use dedicated insulated tools to avoid electric shocks or short circuits.

WARNING

- Before performing maintenance, power off the equipment, follow the instructions on the delayed discharge label, and wait for a period of time as specified to ensure that the equipment is not energized.

CAUTION

When cleaning the system, connecting cables, and checking grounding reliability, power off the system and ensure that the external switches on the DC and AC sides are turned off.

Maintenance Items

To ensure that the device operates properly for a long term, you are advised to perform routine maintenance as described in this section.

 Copyright © Huawei Technologies Co., Ltd.

Table 8-1 Maintenance checklist

Check Item	Check Method	Maintenance Interval
Alarm	Check alarms on the app, SmartLogger, or management system.	Routine maintenance
• Cleanness of the air intake vent • Cleanness of the air exhaust vent	• Check whether there is dust on the air intake vents. If necessary, remove and clean the baffle plates. • Periodically check whether there is dust buildup at the air exhaust vents. If yes, clean up dust and foreign matter.	Once every 6 to 12 months
Fan	Check whether the fans generate abnormal noise during operation.	Once every 6 to 12 months
System status	• Check whether the device generates abnormal sounds during operation. • Check whether the parameters are correctly set during operation.	Once every 6 months
Cable connection	• Check whether cables are disconnected or loose. • Check whether cables are damaged, especially whether the cable sheath that contacts a metal surface is damaged. • Check whether the unused COM, USB, and FE ports are locked by waterproof caps.	6 months after the first commissioning and once every 6 to 12 months after that
Grounding reliability	Check whether the ground cables are securely grounded.	6 months after the first commissioning and once every 6 to 12 months after that
Appearance	• Check whether devices or mounting brackets are damaged or deformed. • Check whether devices or mounting brackets are rusty. If there is rust, coat flaking, scratch, paint flaking, or other damage, repair the paint damage by referring to **E How Do I Repair Paint Damage?**. If devices are corroded, especially when they are installed in a salt-affected area near the sea, repair the paint damage promptly to avoid more severe corrosion.	Once a quarter
Device inspection	Check the health status of the Smart PCS on the SmartLogger. You can rectify faults based on the inspection logs. For details, see **SmartLogger3000 User Manual**.	Once a year

 Copyright © Huawei Technologies Co., Ltd.

Removing the Baffle Plate from the Air Intake Vent

Figure 8-1 Removing the baffle plate

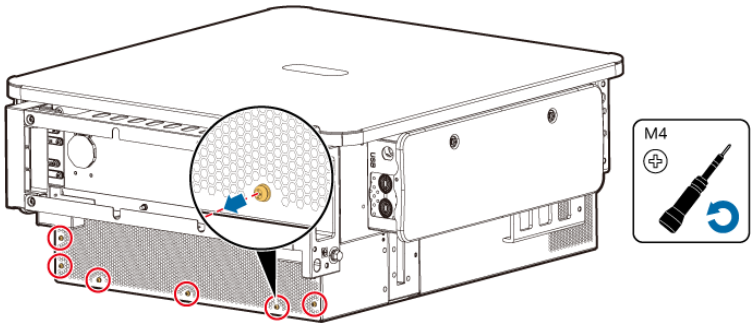

NOTICE

After the cleaning is complete, reinstall the baffle plate to the air intake vent. Tighten the screws with a torque of 1.2 N·m.

8.2 Powering Off the System

Precautions

To prevent personal injury and equipment damage, perform the following procedure to power off the Smart PCS for troubleshooting or replacement.

CAUTION

- If the DC switch between the Smart PCS and the ESS has been turned off automatically, do not turn it on until the fault is rectified.
- If the AC switch between the Smart PCS and the STS has been turned off automatically, do not turn it on before rectifying the fault.
- Before power-off for maintenance, do not touch the energized components of the Smart PCS. Otherwise, electric shocks or arcs may occur.

Procedure

Step 1 Wear proper PPE.

Step 2 Send a shutdown command on the FusionSolar app, SmartLogger, or management system.

Step 3 Turn off the AC switch between the Smart PCS and the STS.

Step 4 Open the AC maintenance compartment door, install a support bar, and use a multimeter to check the voltage between the AC terminal blocks. Ensure that the AC side of the Smart PCS is powered off.

 Copyright © Huawei Technologies Co., Ltd.

Step 5 Turn off the DC switch between the Smart PCS and the ESS.

Step 6 Open the DC maintenance compartment door, install a support bar, and use a multimeter to check the voltage between DC terminal blocks. Ensure that the DC side of the Smart PCS is powered off.

Figure 8-2 Power-off for maintenance

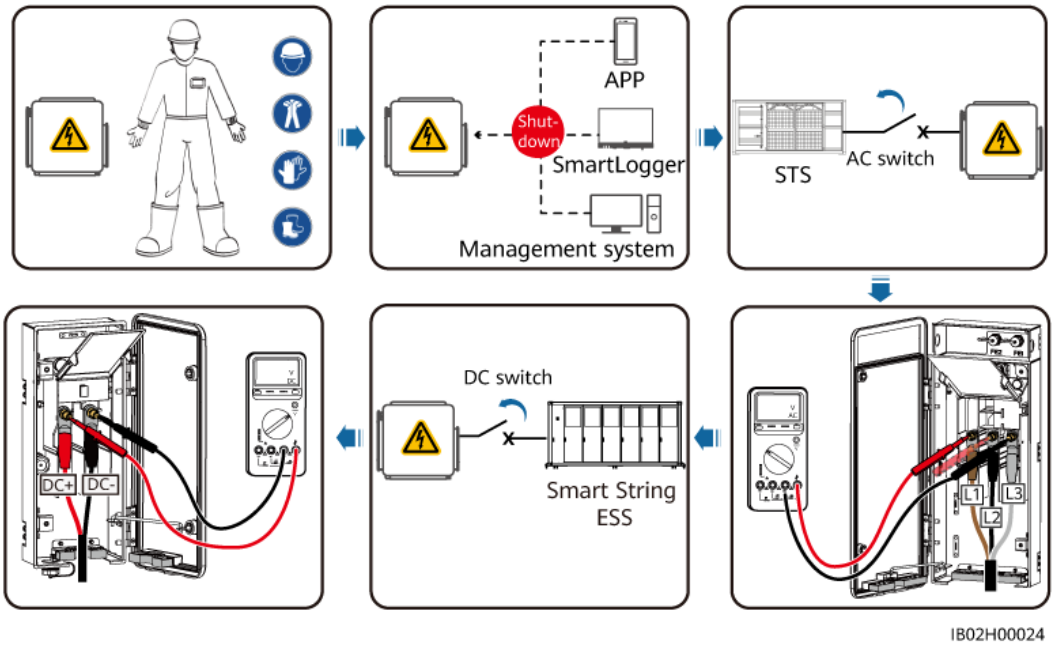

----End

Follow-up Procedure

After the system is powered off, wait for 30 minutes and troubleshoot or repair the Smart PCS.

WARNING

- Do not open the panel for maintenance if the Smart PCS is emitting abnormal smell or smoke, or has obvious exceptions.
- If the Smart PCS does not emit abnormal smell or smoke and is intact, repair or restart it based on the alarm handling suggestions.

8.3 Alarm Reference

For details about alarms, see the **Smart Power Control System Alarm Reference**.

8.4 Replacing a Fan

Precautions

- Before replacing a fan, power off the Smart PCS.
- When replacing a fan, use insulated tools and wear PPE.

Procedure

Step 1 Remove the screws from the fan tray and store them properly. Pull out the fan tray until it is flush with the maintenance compartments of the Smart PCS.

NOTE

If the fan gets stuck when being pulled, slightly lift the fan tray.

Figure 8-3 Pulling out the fan tray (1)

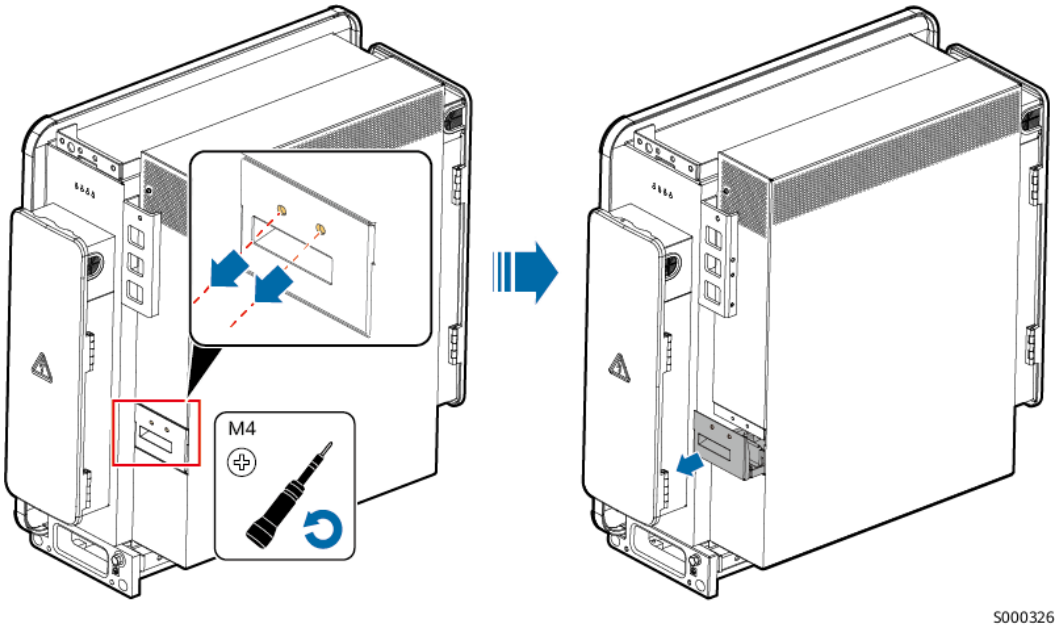

Step 2 Remove the cable ties shared by the cables, unscrew the connectors, and disconnect the cables.

Figure 8-4 Disconnecting cables

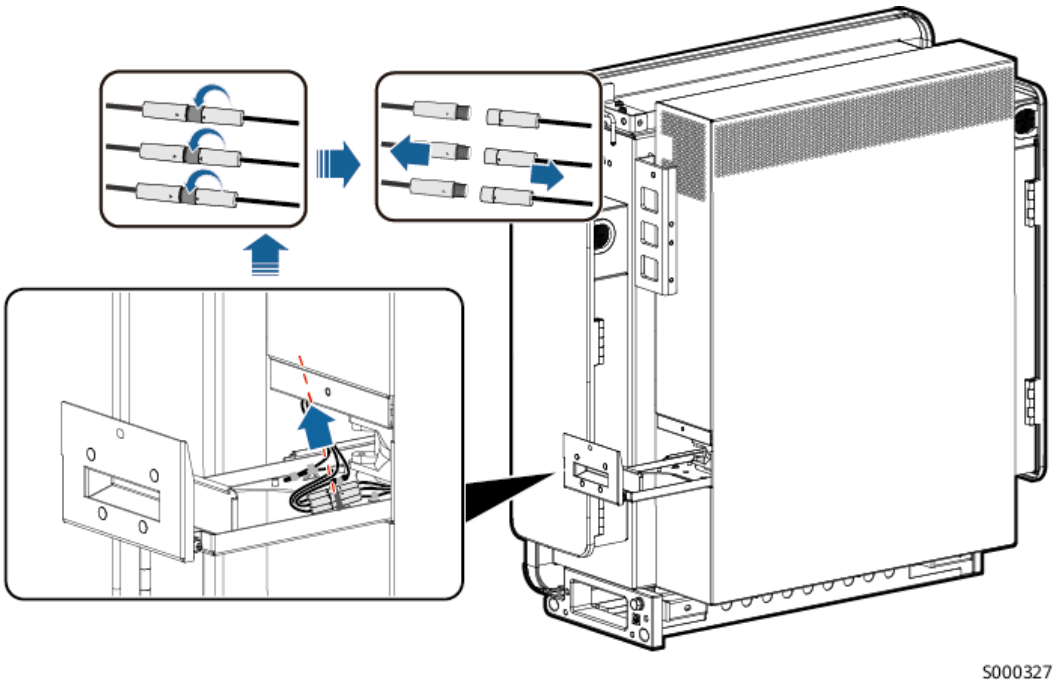

Step 3 Pull out the fan tray completely.

Figure 8-5 Pulling out the fan tray (2)

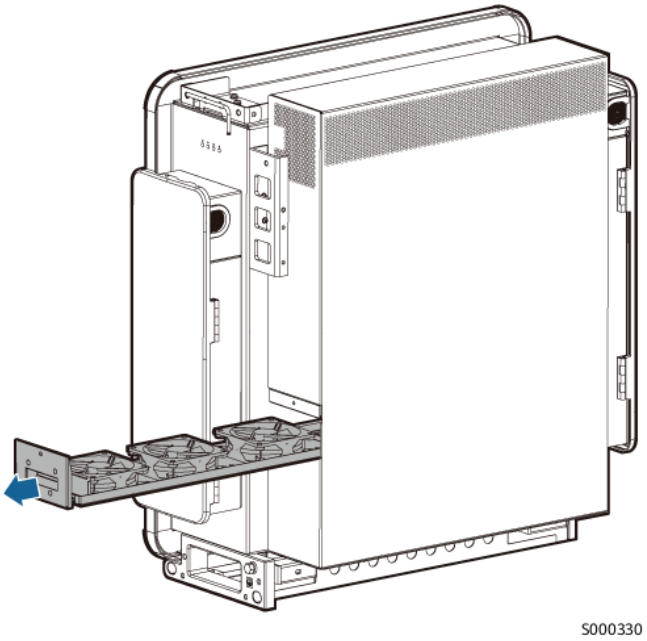

Step 4 Remove cable ties of the faulty fan.

- FAN 1 is faulty.

Figure 8-6 Removing cable ties from FAN 1

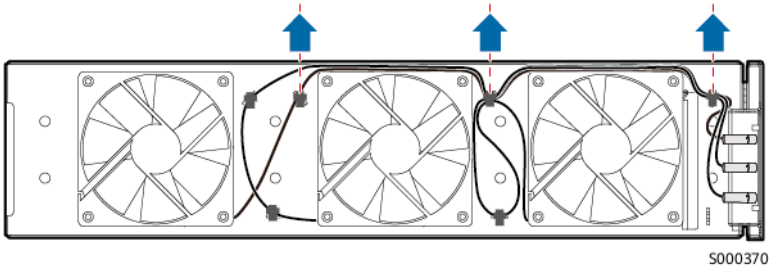

- FAN 2 is faulty.

Figure 8-7 Removing cable ties from FAN 2

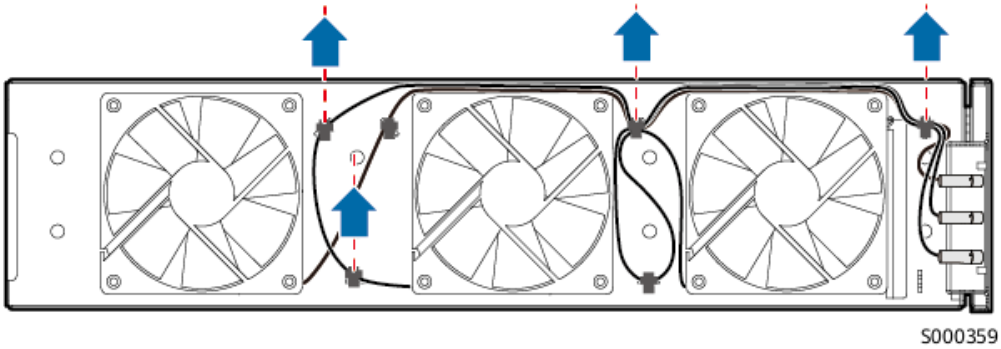

- FAN 3 is faulty.

Figure 8-8 Removing cable ties from FAN 3

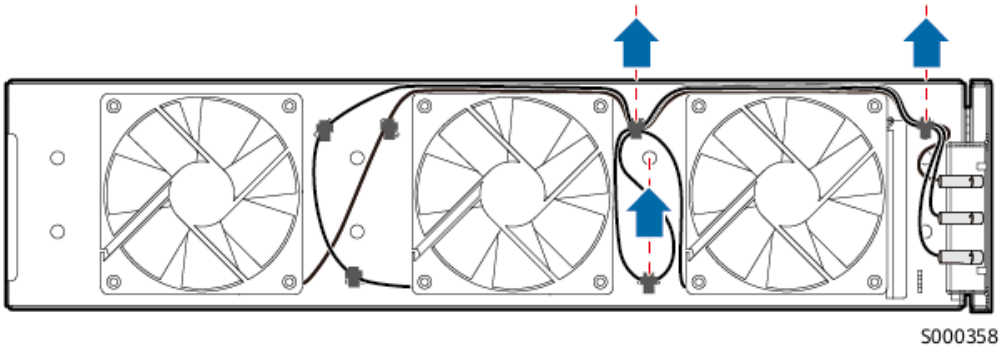

Step 5 Remove the faulty fan (FAN 1 is used as an example).

Figure 8-9 Removing the fan

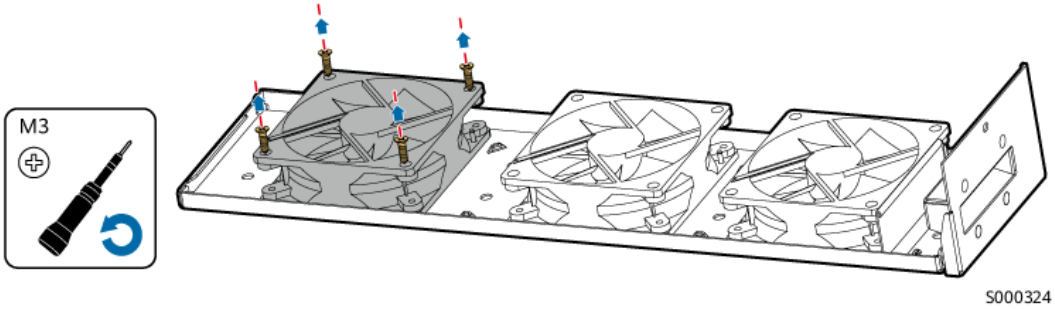

Step 6 Install a new fan (FAN 1 is used as an example).

Figure 8-10 Installing a fan

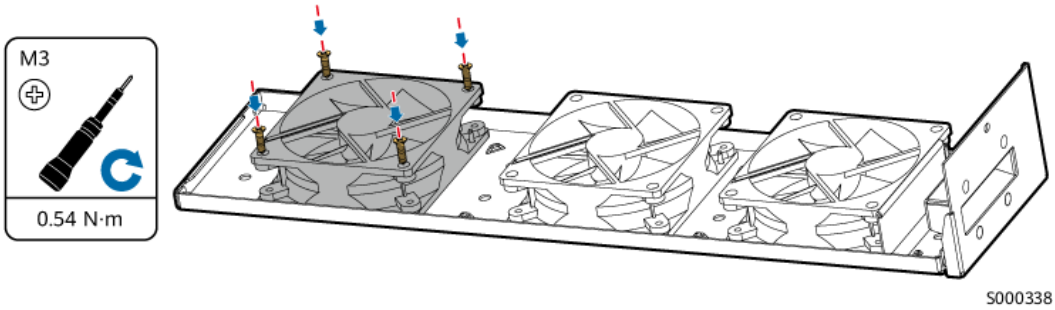

Step 7 Bind the fan cables.

- Binding positions for FAN 1

Figure 8-11 Binding the cables of FAN 1

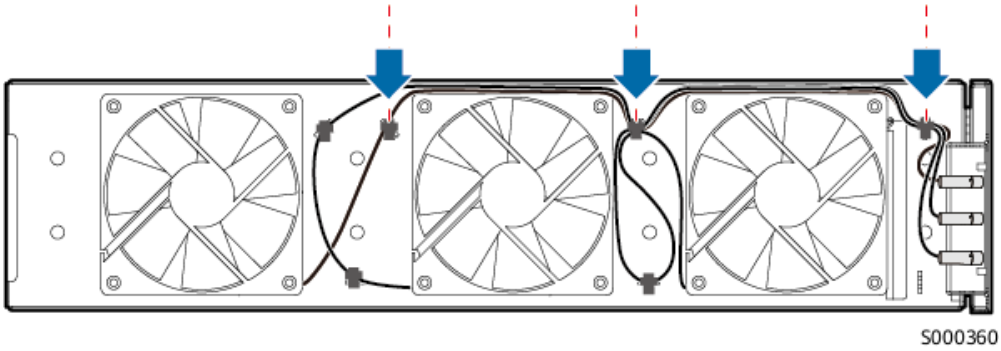

- Binding positions for FAN 2

Figure 8-12 Binding the cables of FAN 2

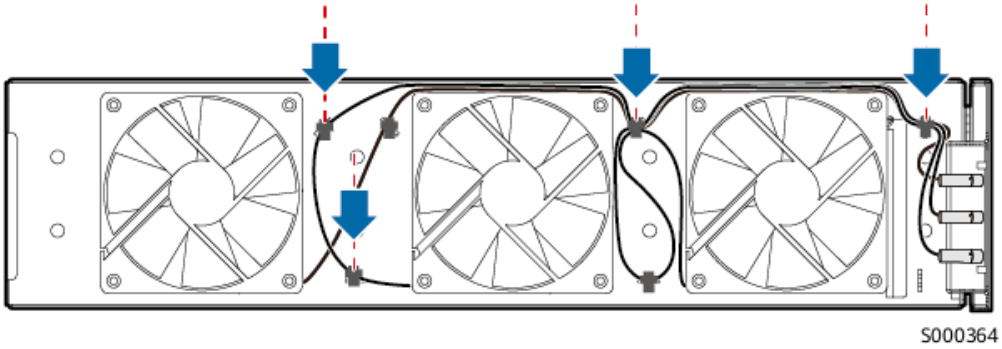

- Binding positions for FAN 3

Figure 8-13 Binding the cables of FAN 3

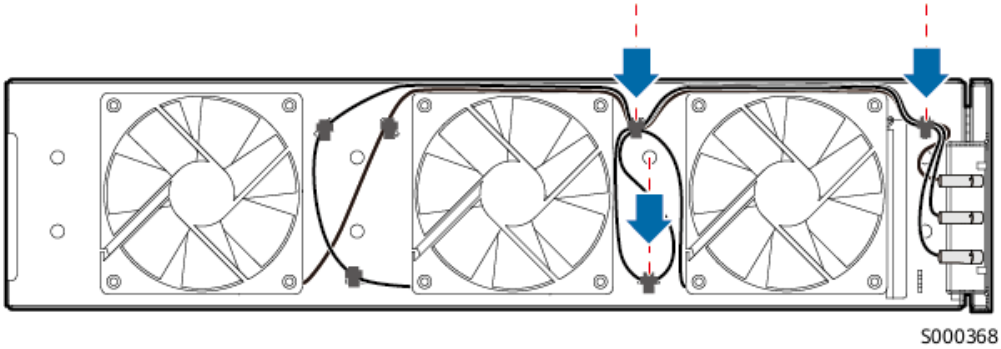

Step 8 Push in the fan tray until the fan baffle plate is flush with the Smart PCS enclosure.

NOTE

If the fan gets stuck when being pushed in, slightly lift the fan tray.

Figure 8-14 Pushing in the fan tray

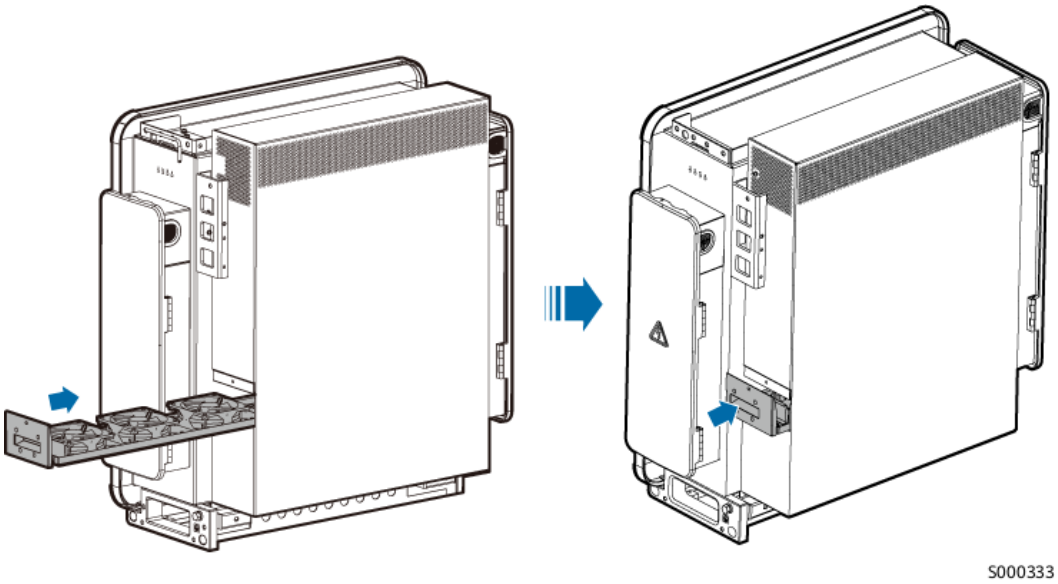

Step 9 Connect the cables correctly according to the cable labels and bind the cables.

Figure 8-15 Binding cables

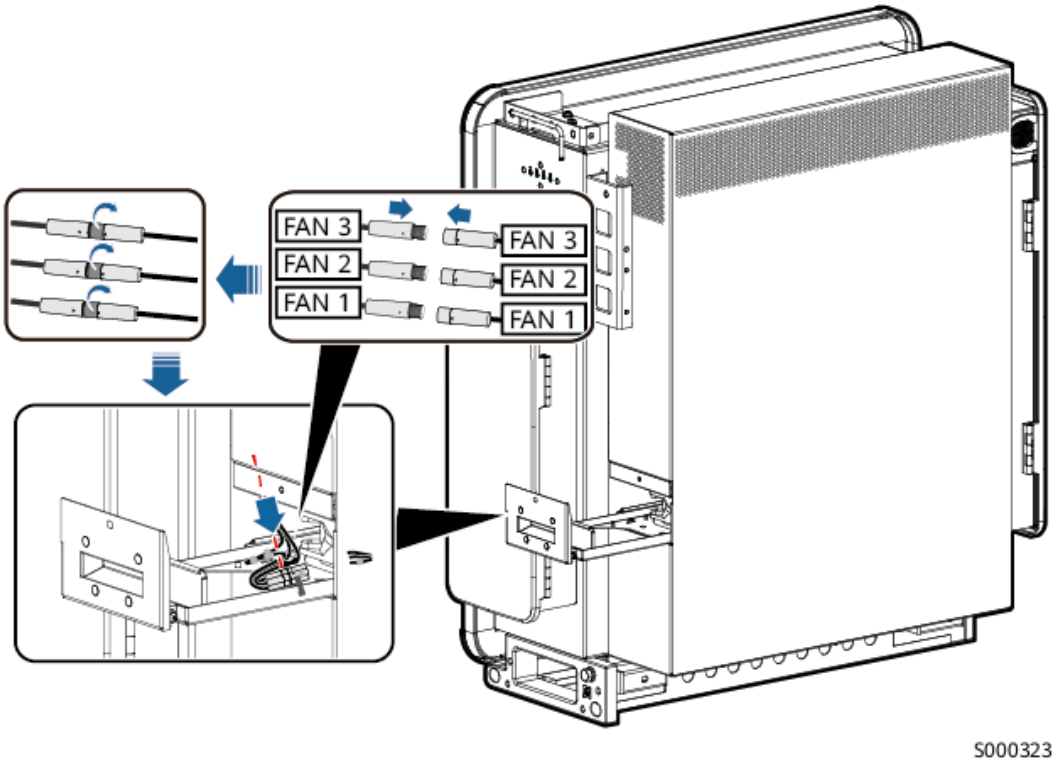

Step 10 Push in the fan tray completely and tighten the screws.

Figure 8-16 Reinstalling the fan tray

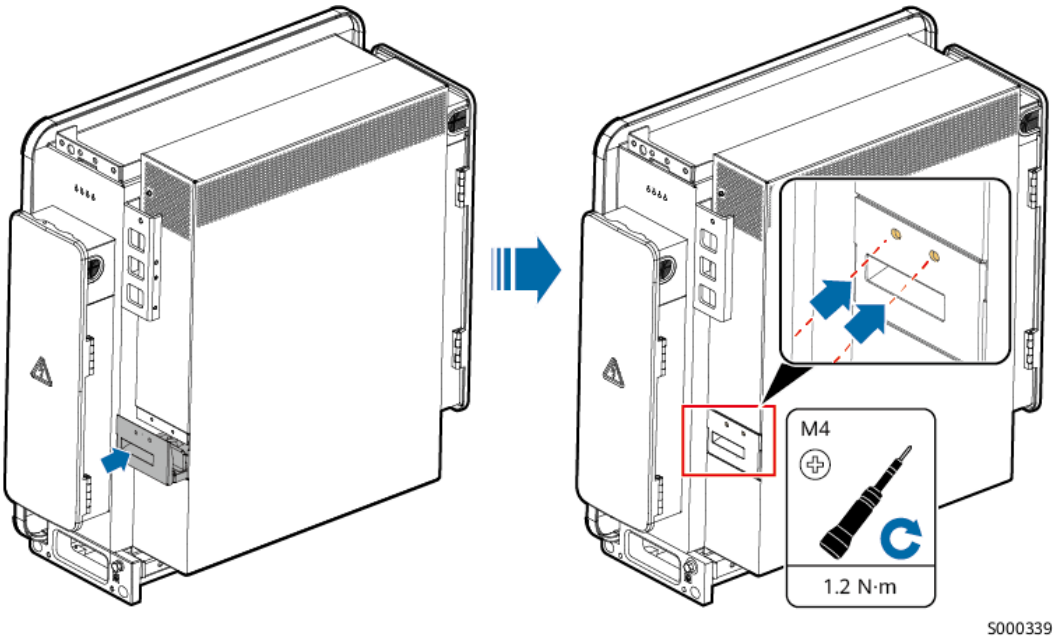

----End

8.5 Replacing the Smart PCS

Context

Replace the device if its enclosure is severely damaged or the hardware is faulty due to external forces.

Procedure

Step 1 Send a shutdown command on the FusionSolar app, SmartLogger, or management system.

Step 2 Turn off the external switches on the DC and AC sides. For details, see **8.2 Powering Off the System**.

Step 3 Remove the DC power cables, AC power cables, communications cables, and PE cable from the Smart PCS in sequence.

Step 4 Remove the Smart PCS based on site requirements.

- Rear bracket-mounted:

Figure 8-17 Removing the Smart PCS

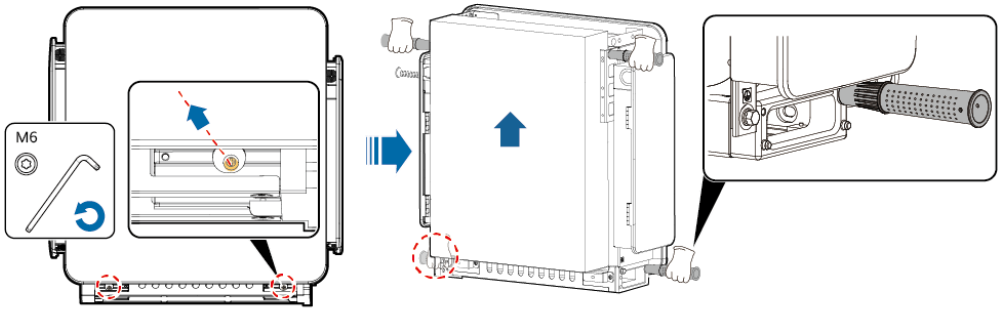

- Base support-mounted

Figure 8-18 Removing screws from the Smart PCS

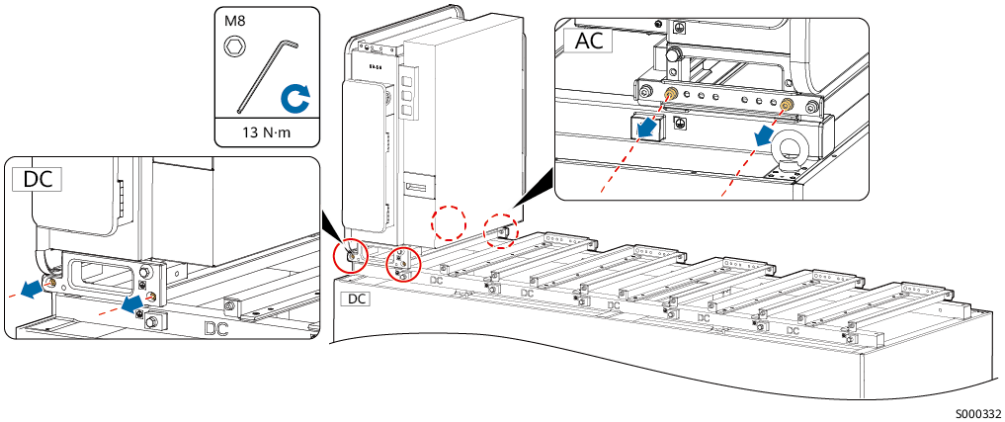

Copyright © Huawei Technologies Co., Ltd.

Figure 8-19 Removing the Smart PCS

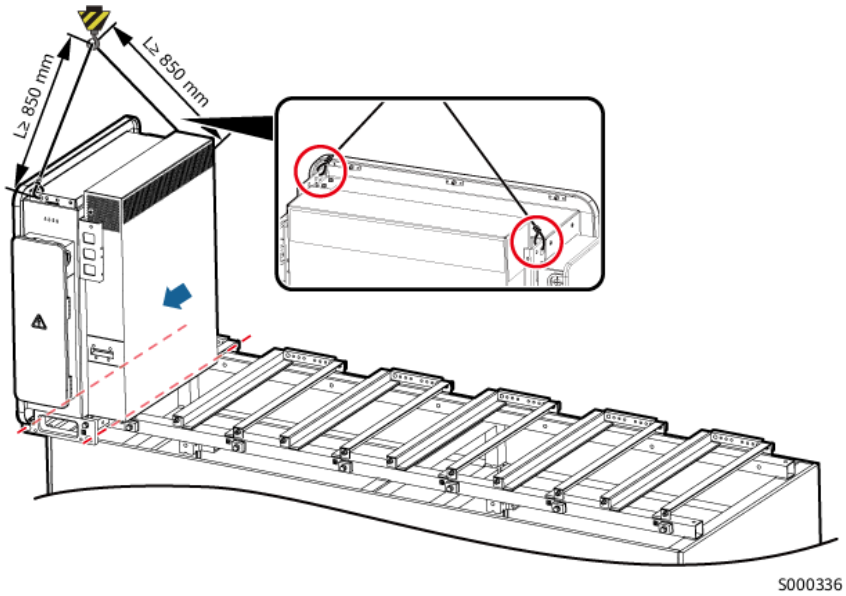

Step 5 Install the new Smart PCS. For details, see **4 Installation**.

Step 6 Connect the PE cable, DC power cables, AC power cables, and communications cables in sequence. For details, see **5 Cable Installation**.

Step 7 Power on the Smart PCS. Observe the LED indicators to check the running status of the Smart PCS and verify that the replacement is successful.

----End

Follow-up Procedure

Step 1 Log in to the SmartLogger WebUI, choose **Maintenance > Connect Device**, select the ESS, and click to send a startup command. Observe LED indicators of the Smart PCS and ensure that the DC side of the Smart PCS is powered on.

If the cable connection is abnormal, the **Cable Connection Abnormal** alarm will be reported and the DC side will be powered off automatically. Rectify the fault according to the troubleshooting suggestions.

Step 2 Perform the wiring inspection.

Choose **Maintenance > Device Mgmt. > Wiring inspection**, select the target device, and click **Wiring inspection**.

NOTE

After the wiring inspection is successful, the DC side of the Smart PCS will be powered on automatically in response to the startup command in **Step 1**.

Step 3 Upgrade software of the new Smart PCS. Ensure that the software version of the new Smart PCS is the same as that of other Smart PCSs on site.

Step 4 Choose **Monitoring > Running Param. > Grid Parameters**, and set **Grid code**. Ensure that the grid code setting of the new Smart PCS matches the local grid code. Wait for 10s and perform the operations in **Step 5**.

Step 5 The settings of **Grid Parameters**, **Protection Parameters**, **Feature Parameters**, **Power Adjustment**, and **Power Baseline** of the new device must be synchronized from other devices. This section uses **Grid Parameters** settings as an example to describe how to synchronize data. The operations for setting other parameters are similar.

Click **Monitoring**, select a running device, choose **Running Param. > Grid Parameters > All > Batch configurations**, and click **Confirm** to synchronize data to the new device.

Step 6 Click **Monitoring**.

1. Select the faulty Smart PCS, choose **Running Param. > Adjustment**, and record the values of **Adjust total energy yield** and **Calibration of total power supply from grid**.
2. Select the new device, choose **Running Param. > Adjustment**, and set **Adjust total energy yield** and **Calibration of total power supply from grid** to be the same as those of the original device.

Step 7 (Optional) If a third-party NMS that complies with the IEC 104 protocol is connected, choose **Settings > IEC104**, and ensure that the teleindication, telemetering, telecontrol, and teleadjust signal numbers of the new Smart PCS on all tab pages under IEC104 are the same as those of the faulty Smart PCS.

Step 8 Delete the faulty Smart PCS.

Choose **Maintenance > Connect Device**, select the faulty Smart PCS, click **Remove Devices**, and click **Confirm**.

Step 9 Choose **Maintenance > Connect Device**, select the Smart PCS, and click to send a startup command. After the Smart PCS is started, check that it is running properly.

Step 10 (Optional) Log in to the PV plant management system, access the plant, choose **Device Management**, select the faulty Smart PCS, click **Delete**, and click **OK**.

NOTE

- Perform this step if you purchase and use the PV plant management system.
- The software version corresponding to the user interface (UI) screenshot in this step is iMaster NetEco V600R023C00SPC110. The UI may vary by software versions and the screenshot is for reference only.

----End

8.6 Disposing of the Smart PCS

If the Smart PCS reaches the end of its service life, dispose of it according to local regulations for the disposal of electrical equipment.

 Copyright © Huawei Technologies Co., Ltd.

9 Technical Specifications

Efficiency

Item	LUNA2000-213KTL-H0
Maximum efficiency	99.01%

DC Side

Item	LUNA2000-213KTL-H0
Number of DC routes	1
Maximum DC voltage	1500 V
Maximum DC current	• 218.5 A (long term) • 238 A (1 minute)
Rated DC voltage	1331 V
Rated operating current	162.1 A
Full-load voltage range	1100–1500 V
Operating voltage range	800–1500 V

AC Side (On-Grid)

Item	LUNA2000-213KTL-H0
Rated AC voltage	800 V
Rated AC power	• 213 kW at 40°C • 192 kW at 50°C

 Copyright © Huawei Technologies Co., Ltd.

Item	LUNA2000-213KTL-H0
Maximum AC power	• 236.4 kW (long term) • 257.7 kW (1 minute)
Rated output current	153.7 A
Maximum output current	• 170.6 A (long term) • 186 A (1 minute)
Supported power grid frequency	50 Hz/60 Hz
Power factor	1 leading to 1 lagging
THDI (rated power)	< 1.5%

Protection

Item	LUNA2000-213KTL-H0
Anti-islanding protection	Supported
AC overcurrent protection	Supported
DC reverse connection protection	Supported
DC surge protection	Type II
AC surge protection	Type II
Insulation resistance detection	Supported
Residual current monitoring	Supported
Overvoltage category	DC II/AC III

Display and Communication

Item	LUNA2000-213KTL-H0
Display	LED indicators and WLAN module+app
Networking mode	Ethernet/CAN

General Specifications

Item	LUNA2000-213KTL-H0
Dimensions (H x W x D)	865 mm x 875 mm x 365 mm
Net weight	< 110 kg

 Copyright © Huawei Technologies Co., Ltd.

Item	LUNA2000-213KTL-H0
Operating temperature	–25°C to +60°C (derated above +40°C)
Cooling mode	Smart air cooling
Noise[1]	Typical value: 75 dB
Maximum operating altitude	4700 m
Relative humidity	0%–100% RH (non-condensing)
AC/DC terminal	OT/DT terminal
IP rating	IP66
Topology	Transformerless
Note [1]: The typical noise value is the test result under typical working conditions in the lab environment. Do not install the Smart PCS in noise-sensitive areas (such as residential areas, office areas, and schools) to avoid complaints.	

NOTE

The device complies with IEC 61000-3-12.

 Copyright © Huawei Technologies Co., Ltd.

A Crimping an OT or DT Terminal

Requirements on an OT or DT Terminal

- If a copper cable is used, use copper wiring terminals.
- If a copper-clad aluminum cable is used, use copper wiring terminals.
- If an aluminum alloy cable is used, use copper-to-aluminum wiring terminals, or aluminum wiring terminals along with copper-to-aluminum washers.

NOTICE

- Do not connect aluminum wiring terminals to the AC or DC terminal blocks. Otherwise electrochemical corrosion may occur, affecting the reliability of cable connections.
- Comply with the IEC 61238-1 requirements when using copper-to-aluminum wiring terminals, or aluminum wiring terminals along with copper-to-aluminum washers.
- Do not mix up the aluminum and copper sides of a copper-to-aluminum washer. Ensure that the aluminum side of the washer contacts the aluminum wiring terminal, and that the copper side contacts the terminal block.

 Copyright © Huawei Technologies Co., Ltd.

Figure A-1 Requirements on an OT or DT terminal

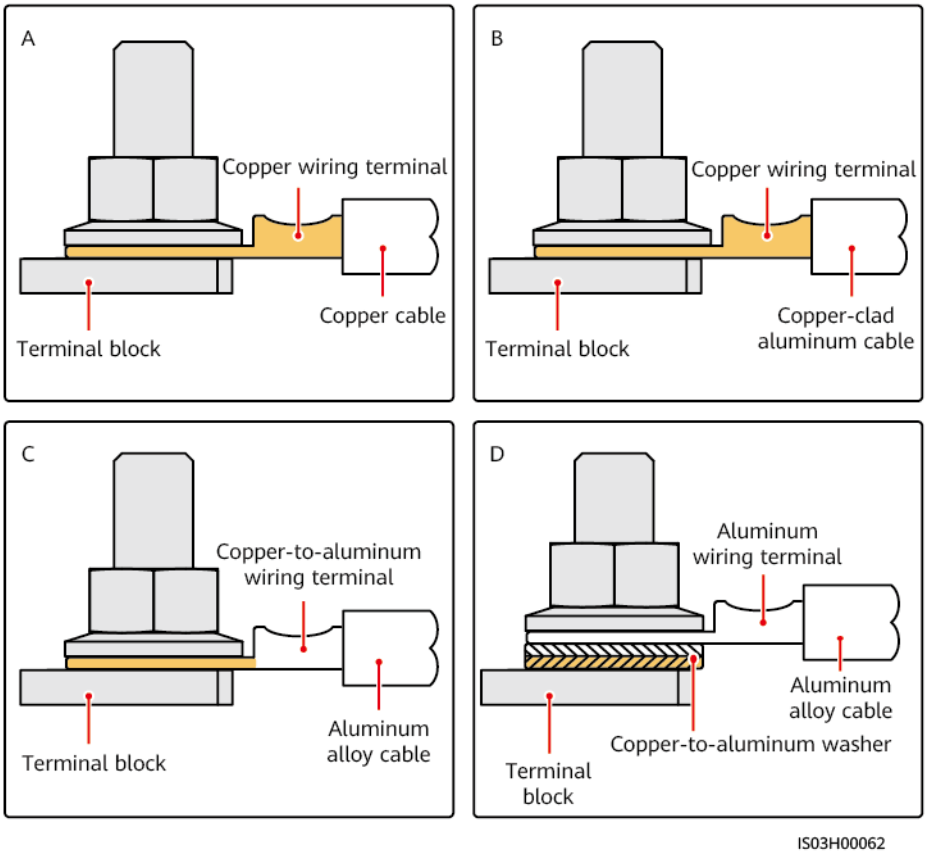

Crimping an OT or DT Terminal

NOTICE

- Avoid scratching the core wire when stripping a cable.
- The cavity formed after the conductor crimp strip of the OT or DT terminal has been crimped must wrap around the core wire completely. The core wire must make close contact with the OT or DT terminal.
- The crimped area can be wrapped with insulation materials such as heat shrink tubing, cold shrink tubing, or insulation tape. The heat shrink tubing is used as an example.
- Use a heat gun carefully to avoid heat damage to the equipment.

 Copyright © Huawei Technologies Co., Ltd.

Figure A-2 Crimping an OT terminal

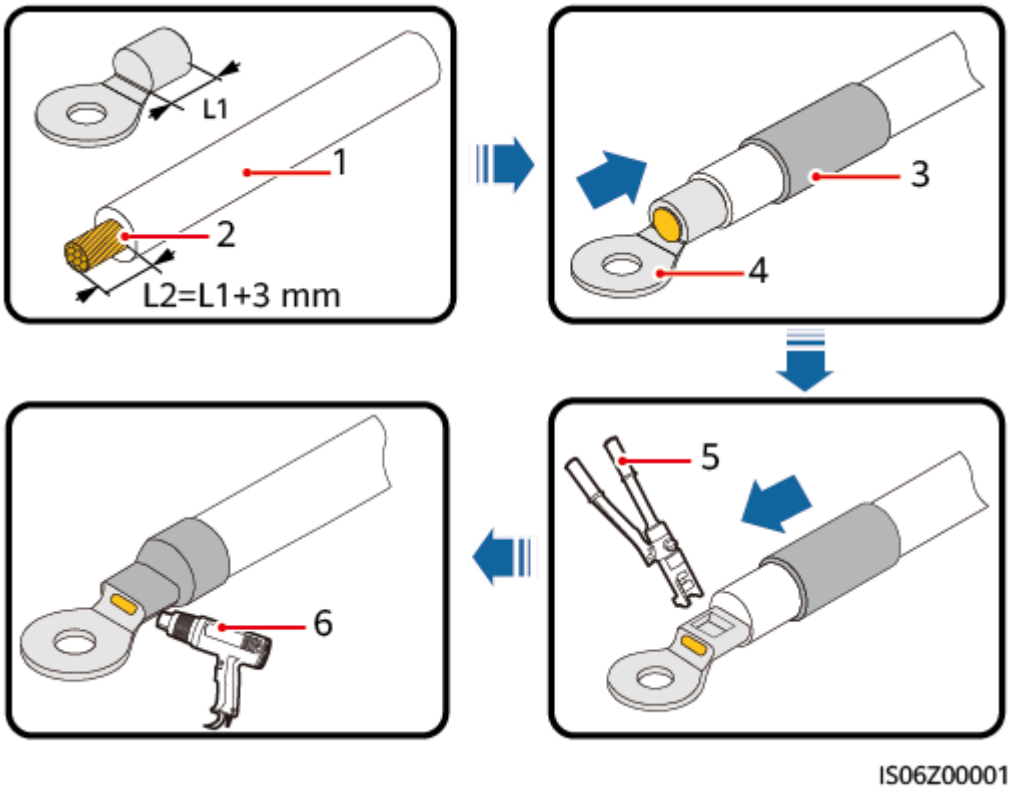

(1) Cable (2) Core wire (3) Heat shrink tubing

(4) OT terminal (5) Hydraulic pliers (6) Heat gun

Figure A-3 Crimping a DT terminal

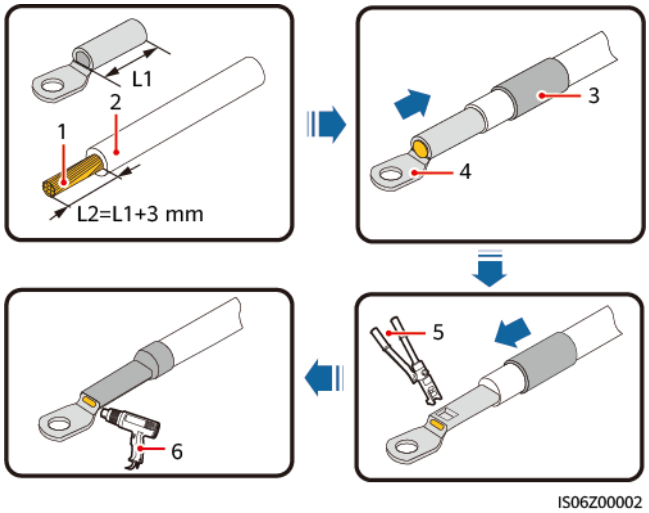

(1) Cable (2) Core wire (3) Heat shrink tubing

(4) DT terminal (5) Hydraulic pliers (6) Heat gun

 Copyright © Huawei Technologies Co., Ltd.

Figure A-4 Specifications of the crimped M12 OT/DT terminal

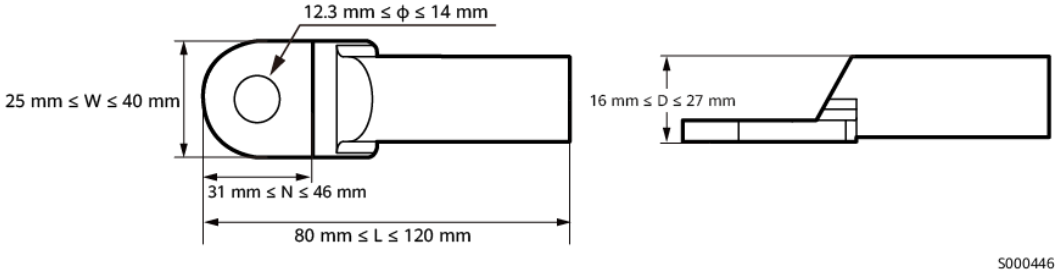

B Grid Codes

NOTICE

If the actual grid parameters exceed the allowed ranges of the local standard grid parameters, the Company shall not be liable for any resulting device damage.

NOTE

The grid codes are subject to change. The listed codes are for reference only.

Set the correct grid code for the Smart PCS based on regions and application scenarios.

No.	Grid Code	Description
1	IEC61727-MV800	IEC 61727 medium-voltage standard power grid (50 Hz)
2	ABNT NBR 16149-MV800	Brazil medium-voltage power grid
3	UTE C 15-712-1-MV800	France power grid
4	Chile-MV800	Chile power grid
5	Mexico-MV800	Mexico power grid
6	EN50438-TR-MV800	Türkiye power grid
7	TAI-PEA-MV800	Thailand power grid
8	Philippines-MV800	Philippines power grid
9	Malaysian-MV800	Malaysia power grid
10	NRS-097-2-1-MV800	South Africa power grid
11	SA_RPPs-MV800	South Africa power grid
12	Jordan-Transmission-MV800	Jordan power grid
13	Jordan-Distribution-MV800	Jordan power grid

 Copyright © Huawei Technologies Co., Ltd.

No.	Grid Code	Description
14	DUBAI-MV800	Dubai power grid
15	SAUDI-MV800	Saudi Arabia power grid
16	EN50549-MV800	Ireland power grid
17	Northern Ireland-MV800	Northern Ireland power grid
18	IEC 61727-MV800-60HZ	General power grid
19	Pakistan-MV800	Pakistan power grid
20	BRASIL-ANEEL-MV800	Brazil power grid
21	Israel-MV800	Israel power grid
22	CEI0-16-MV800	Italy medium-voltage power grid
23	KENYA_ETHIOPIA-MV800	Kenya low-voltage power grid and Ethiopia medium-voltage power grid
24	NIGERIA-MV800	Nigeria medium-voltage power grid
25	ABUDHABI-MV800	Abu Dhabi medium-voltage power grid
26	LEBANON-MV800	Lebanon medium-voltage power grid
27	ARGENTINA-MV800	Argentina medium-voltage power grid
28	AUSTRALIA-NER-MV800	Australia NER standard power grid
29	VDE-AR-N4120-HV800	VDE 4120 standard power grid
30	IEEE 1547-MV800	General power grid
31	RD1699/661-MV800	Spain medium-voltage power grid
32	Vietnam-MV800	Vietnam medium-voltage power grid
33	CHILE-PMGD-MV800	Chile PMGD medium-voltage power grid (800 V)
34	GHANA-MV800	Ghana medium-voltage power grid (800 V)
35	TAIPOWER-MV800	Taiwan Power medium-voltage power grid (800 V)
36	OMAN-MV800	Oman medium-voltage power grid
37	KUWAIT-MV800	Kuwait medium-voltage power grid
38	BANGLADESH-MV800	Bangladesh medium-voltage power grid
39	KAZAKHSTAN-MV800	Kazakhstan medium-voltage power grid

 Copyright © Huawei Technologies Co., Ltd.

No.	Grid Code	Description
40	Mauritius-MV800	Mauritius medium-voltage power grid
41	Oman-PDO-MV800	Oman PDO medium-voltage power grid
42	TAI-MEA-MV800	Thailand medium-voltage power grid
43	PORTUGAL-MV800	Portugal medium-voltage power grid
44	C10/11-MV800	Belgium medium-voltage power grid
45	G99-TYPEB-HV-MV800	UK G99-TYPEB-HV medium-voltage power grid
46	G99-TYPEC-HV-MV800	UK G99-TYPEC-HV medium-voltage power grid
47	G99-TYPED-MV800	UK G99-TYPED medium-voltage power grid
48	VDE-AR-N4110-MV800	Germany medium-voltage power grid (800 V)
49	NTS-MV800	Spain medium-voltage power grid
50	SINGAPORE-MV800	Singapore medium-voltage power grid
51	Cambodia-MV800	Cambodia medium-voltage power grid
52	GREG060-MV800	Colombia medium-voltage power grid
53	PERU-MV800	Peru medium-voltage power grid
54	Israel-HV800	Israel high-voltage power grid (161 kV)
55	AUSTRIA-MV800	Austria medium-voltage power grid (type B)
56	AUSTRIA-HV800	Austria medium-voltage power grid (type D)
57	POLAND-EN50549-MV800	Poland medium-voltage power grid
58	IRELAND-EN50549-MV800	Ireland power grid
59	DENMARK-EN50549-MV800	Denmark power grid
60	FRANCE-RTE-MV800	France RTE power grid
61	AUSTRALIA-AS4777_A-MV800	Australia power grid
62	CHINA-GBT34120-MV800	China utility-scale ESS power grid
63	UZBEKISTAN-MV800	Uzbekistan power grid
64	CZECH-EN50549-MV800	Czech Republic power grid

 Copyright © Huawei Technologies Co., Ltd.

No.	Grid Code	Description
65	FINLAND-EN50549-MV800	Finland power grid
66	EN50549-SE-MV800	Sweden power grid
67	CEPM-MV800	Dominican Republic medium-voltage power grid
68	SA-BESF-L-MV800	South Africa BESF-L medium-voltage power grid
69	SA-BESF-H-MV800	South Africa BESF-H medium-voltage power grid
70	VDE-AR-N4130-800	Germany 4130 power grid
71	G99-TYPEA-MV-800	UK G99 power grid
72	FRANCE-RTE_TYPED-800	France RTE_TYPED power grid
73	AUSTRALIA-AS4777_WA-800	Australia (Western Australia) power grid
74	TAI-EGAT-800	Thailand EGAT power grid
75	JAPAN-800-50Hz	Japan power grid
76	JAPAN-800-60Hz	Japan power grid
77	AUSTRALIA-AS4777_B-800	Australia power grid
78	AUSTRALIA-AS4777_C-800	Australia power grid
79	AUSTRALIA-AS4777_NZ-800	Australia power grid

 Copyright © Huawei Technologies Co., Ltd.

C Resetting a Password

Step 1 On the **Monitoring** page of the SmartLogger, choose the Smart PCS for which you need to reset the password, choose **Running Param.** > **Feature Parameters**, and set **Safe mode** to **Enter**.

Step 2 Log in to the FusionSolar app and reset the password within 4 hours. (If the Smart PCS restarts or no operation is performed within 4 hours, all parameters of the Smart PCS remain unchanged.)

----End

 Copyright © Huawei Technologies Co., Ltd.

D Certificate Management and Maintenance

Initial Certificate Risk Disclaimer

Huawei's initial certificates preconfigured on Huawei devices during manufacturing are mandatory identity credentials for Huawei devices. The disclaimer statements for using the certificates are as follows:

1. Huawei's initial certificates are used only in the deployment phase, for establishing initial security channels between devices and the customer's network. Huawei does not promise or guarantee the security of the initial certificates.
2. Customers shall bear consequences of all security risks and security incidents arising from using Huawei's initial certificates as service certificates.
3. Huawei's initial certificates are valid from the manufacturing date until October 2099.
4. Services using an initial certificate will not be interrupted when the certificate expires.
5. It is recommended that customers deploy a PKI system to issue certificates for devices and software on the live network and manage the lifecycle of the certificates. To ensure security, certificates with short validity periods are recommended.

Application Scenarios of Initial Certificates

File Path and Name	Scenario	Replacement
f:/sun_ca.crt	Two-way certificate authentication is performed when the Smart PCS communicates with the SACU through Modbus-TCP.	For details about how to replace a certificate, contact technical support engineers to obtain the corresponding security maintenance manual.
f:/sun_tomcat_client.crt		
f:/sun_tomcat_client.key		

 Copyright © Huawei Technologies Co., Ltd.

E How Do I Repair Paint Damage?

E.1 Repairing Paint Damage for Devices

Prerequisites

- Do not apply paint in bad weather, such as rain, snow, strong wind, and sandstorm, when there is no shelter outdoors.
- Prepare the following paint:
  - Primer: epoxy micaceous iron oxide paint
  - Top coat: RAL 9003 (white) and RAL 7035 (gray) polyurethane paint

Paint Repair Description

The equipment appearance shall be intact. If paint has flaked off, repair paint damage immediately.

NOTE

- Check the paint damage on the equipment and prepare appropriate tools and materials. The number of materials depends on site requirements.
- The PCS colors include white and gray. Determine the paint color code according to the color of the damaged area to repair the paint damage.

 Copyright © Huawei Technologies Co., Ltd.

Table E-1 Paint repair description

Paint Damage	Tool and Material	Procedure	Description
Slight scratch (base material not exposed)	Spray paint or paint, brush (required for repainting a small area), fine sandpaper, anhydrous alcohol, cotton cloth, and paint sprayer (required for repainting a large area)	Steps 1, 2, and 4	1. The color codes of the top coat (polyurethane paint) are RAL 9003 (white) and RAL 7035 (gray). 2. For a few scratches, smudges, or rust, using a spray paint or brush is recommended. 3. For many scratches or large-area smudges and rust, use a paint sprayer. 4. The paint coating shall be thin and even. Paint drops are prohibited on the coating. The surface shall be smooth. 5. Leave the repainted area for approximately 30 minutes before performing any further operation.
Deep scratch (primer damaged, base material exposed)	Spray paint or paint, epoxy micaceous iron oxide paint, brush (required for repainting a small area), fine sandpaper, anhydrous alcohol, cotton cloth, and paint sprayer (required for repainting a large area)	Steps 1, 2, 3, and 4	

Copyright © Huawei Technologies Co., Ltd.

Table E-2 Paint requirements

Item	Requirement
Primer thickness	120 μm
Top coat thickness	60 μm
Primer type	Epoxy micaceous iron oxide paint
Top coat type	RAL 9003 and RAL 7035 polyurethane top coat

Procedure

Step 1 Gently polish damaged areas using fine sandpaper to remove smudges or rust.

Figure E-1 Polishing a damaged area using sandpaper

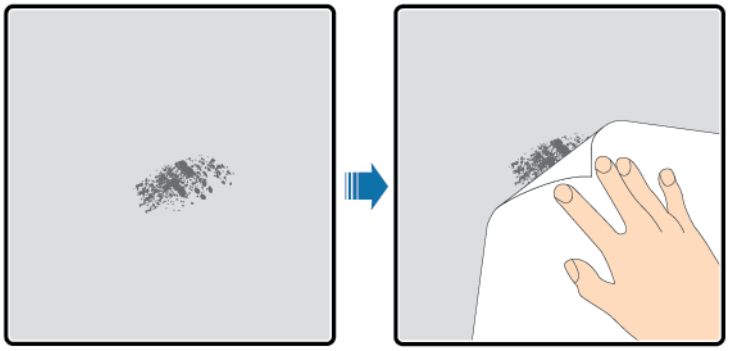

Step 2 Dip a piece of cotton cloth into anhydrous alcohol and wipe the polished or damaged area to remove the dirt and dust. Then wipe off the anhydrous alcohol with a clean and dry cotton cloth

Figure E-2 Wiping a polished or damaged area using anhydrous alcohol

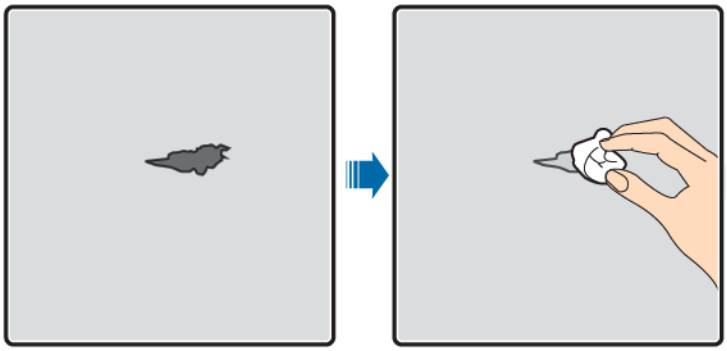

Step 3 Repair the primer (epoxy micaceous iron oxide primer).

1. Paint epoxy micaceous iron oxide primer on the damaged coat using a brush or paint sprayer.

Copyright © Huawei Technologies Co., Ltd.

NOTICE

- If the base material is exposed in the area to be repaired, apply epoxy micaceous iron oxide primer, wait until the paint has dried, and then apply polyurethane top coat.
- Select epoxy micaceous iron oxide primer or polyurethane top coat with a color same as the surface coat color of the equipment.

2. Wait for 30 minutes and check whether the painting meets the requirements.

NOTE

- The color of the repainted area must be consistent with that of the surrounding area. Use a colorimeter to measure the color difference (ΔE), which shall be less than or equal to 3. If a colorimeter is unavailable, ensure that there is no visible edge between the repainted area and the surrounding area. The paint shall also be free of bulges, scratches, flaking, or cracks.
- If you choose to spray paint, it is recommended that you spray paint three times before checking the result. If the color does not meet the requirements, paint more times until the painting meets the requirements.

Step 4 Repair the top coat (polyurethane top coat).

1. Apply paint evenly to the damaged area based on the damage degree of the paint using an aerosol spray, brush, or paint sprayer until all damage traces are invisible.

NOTICE

- Ensure that the painting is thin, even, and smooth.
- In the case that an equipment pattern has different colors, to prevent undamaged areas and those with different colors as the damaged area from being contaminated during repainting, cover such areas using white paper and adhesive tape before repairing paint.

Figure E-3 Repainting a damaged area

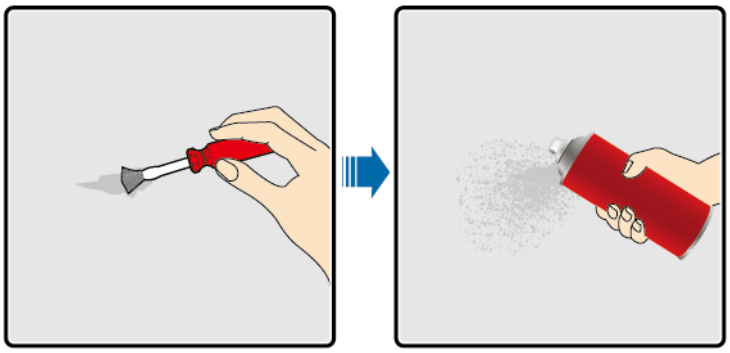

DD00000013

2. Wait for 30 minutes and check whether the painting meets the requirements.

Copyright © Huawei Technologies Co., Ltd.

NOTE

- The color of the repainted area must be consistent with that of the surrounding area. Use a colorimeter to measure the color difference (ΔE), which shall be less than or equal to 3. If a colorimeter is unavailable, ensure that there is no visible edge between the repainted area and the surrounding area. The paint shall also be free of bulges, scratches, flaking, or cracks.
- If you choose to spray paint, it is recommended that you spray paint three times before checking the result. If the color does not meet the requirements, paint more times until the painting meets the requirements.

----End

E.2 Repairing Paint Damage for Mounting Brackets

Prerequisites

- Do not apply paint in bad weather, such as rain, snow, strong wind, and sandstorm, when there is no shelter outdoors.
- Prepare the following paint:
  - Primer: epoxy zinc-rich paint
  - Intermediate coat: zinc-rich paint
  - Top coat: RAL 9003 (white) and RAL 7035 (gray) polyurethane paint

Paint Repair Description

The equipment appearance shall be intact. If paint has flaked off, repair paint damage immediately.

NOTE

- Check the paint damage on the equipment and prepare appropriate tools and materials. The number of materials depends on site requirements.
- The rear mounting bracket color is gray, and the base support color is white.

 Copyright © Huawei Technologies Co., Ltd.

Table E-3 Paint repair description

<table>
<tr><th>Paint Damage</th><th>Tool and Material</th><th>Procedure</th><th>Description</th></tr>
<tr><td>Slight scratch (steel base material not exposed)</td><td rowspan="2">Spray paint or paint, brush (required for repainting a small area), fine sandpaper, anhydrous alcohol, cotton cloth, and paint sprayer (required for repainting a large area)</td><td rowspan="2">Steps 1, 2, 4, and 5</td><td rowspan="4">1. The color codes of the top coat (polyurethane paint) are RAL 9003 (white) and RAL 7035 (gray).
2. For a few scratches, smudges, or rust, using a spray paint or brush is recommended.
3. For many scratches or large-area smudges and rust, use a paint sprayer.
4. The paint coating shall be thin and even. Paint drops are prohibited on the coating. The surface shall be smooth.
5. Leave the repainted area for approximately 30 minutes before performing any further operation.</td></tr>
<tr><td>Smudges and rust that cannot be removed</td></tr>
<tr><td>Deep scratch (primer damaged, steel base material exposed)</td><td>Spray paint or paint, zinc-rich primer, brush (required for repainting a small area), fine sandpaper, anhydrous alcohol, cotton cloth, and paint sprayer (required for repainting a large area)</td><td>Steps 1, 2, 3, 4, and 5</td></tr>
<tr><td>Dent</td><td colspan="2">1. If a dent is less than or equal to 100 mm^2 in area and less than 3 mm in depth, fill the dent with Poly-Putty base and then perform the same operations as those for processing deep scratches.
2. If a dent is greater than 100 mm^2 in area or greater than 3 mm in depth, ask the local supplier for an appropriate repainting solution.</td></tr>
</table>

Procedure

Step 1 Gently polish damaged areas using fine sandpaper to remove smudges or rust.

 Copyright © Huawei Technologies Co., Ltd.

Figure E-4 Polishing a damaged area using sandpaper

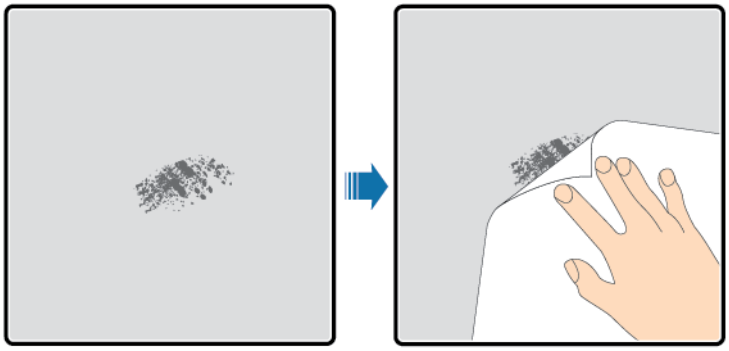

Step 2 Dip a piece of cotton cloth into anhydrous alcohol and wipe the polished or damaged area to remove the dirt and dust. Then wipe off the anhydrous alcohol with a clean and dry cotton cloth

Figure E-5 Wiping a polished or damaged area using anhydrous alcohol

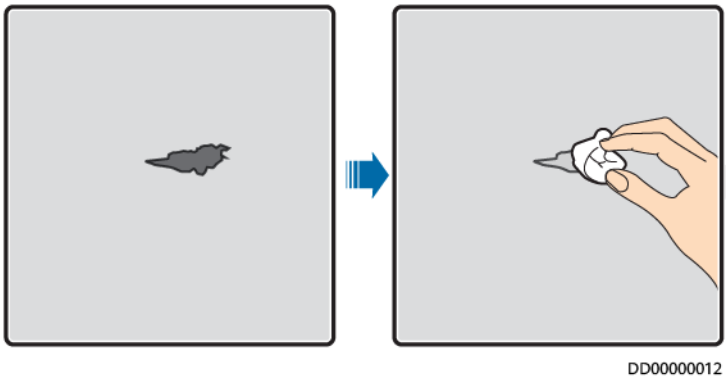

Step 3 Paint zinc-rich primer on the damaged coat using a brush or paint sprayer.

NOTICE

- If the base material is exposed in the area to be repaired, apply epoxy zinc-rich primer, wait until the paint has dried, and then apply acrylic acid top coat.
- Select epoxy zinc-rich primer or acrylic acid top coat with a color the same as the surface coating color of the equipment.

Step 4 Apply paint evenly to the damaged area based on the damage degree of the paint using an aerosol spray, brush, or paint sprayer until all damage traces are invisible.

NOTICE

- Ensure that the painting is thin, even, and smooth.
- In the case that an equipment pattern has different colors, to prevent undamaged areas and those with different colors as the damaged area from being contaminated during repainting, cover such areas using white paper and adhesive tape before repairing paint.

 Copyright © Huawei Technologies Co., Ltd.

Figure E-6 Repainting a damaged area

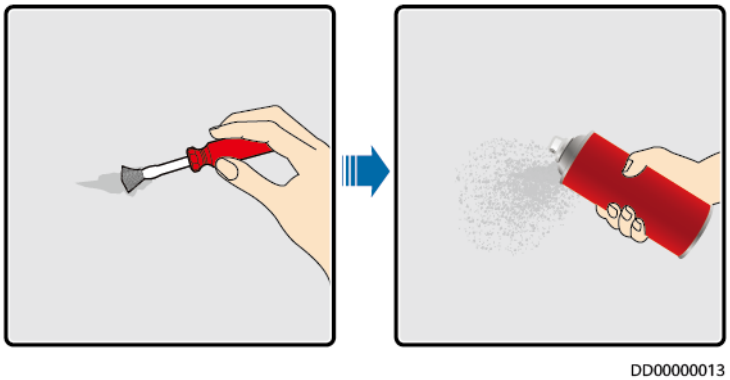

Step 5 Wait for 30 minutes and check whether the painting meets the requirements.

NOTE

- The color of the repainted area must be consistent with that of the surrounding area. Use a colorimeter to measure the color difference (ΔE), which shall be less than or equal to 3. If a colorimeter is unavailable, ensure that there is no visible edge between the repainted area and the surrounding area. The paint shall also be free of bulges, scratches, flaking, or cracks.
- If you choose to spray paint, it is recommended that you spray paint three times before checking the result. If the color does not meet the requirements, paint more times until the painting meets the requirements.

----End

Paint Requirements

Table E-4 Paint requirements

Item	Requirement
Primer thickness	60 μm
Intermediate coat thickness	120 μm
Top coat thickness	60 μm
Primer type	Epoxy zinc-rich paint
Intermediate coat type	Zinc-rich paint
Top coat type	RAL 9003 (white) and RAL 7035 (gray) polyurethane top coat

Copyright © Huawei Technologies Co., Ltd.

F Contact Information

If you have any questions about this product, please contact us.

https://digitalpower.huawei.com

Path: **About Us** > **Contact Us** > **Service Hotlines**

To ensure faster and better services, we kindly request your assistance in providing the following information:

- Model
- Serial number (SN)
- Software version
- Alarm ID or name
- Brief description of the fault symptom

 Copyright © Huawei Technologies Co., Ltd.

NOTE

EU Representative Information: Huawei Technologies Hungary Kft.
Add.: HU-1133 Budapest, Váci út 116-118., 1. Building, 6. floor.
Email: hungary.reception@huawei.com

G Digital Power Customer Service

https://digitalpower.huawei.com/robotchat/

Copyright © Huawei Technologies Co., Ltd.

H Acronyms and Abbreviations

C

COM	communication

F

FE	Fast Ethernet

L

LED	light emitting diode

S

Smart PCS	Smart Power Control System

W

WLAN	wireless local area network

 Copyright © Huawei Technologies Co., Ltd.

Other ManualsLib Projects

www.manualslib.com

www.manualslib.de

www.manualslib.es

www.manualslib.fr

www.manualslib.nl

www.manualslib.mx

www.manualslib.tech 30+ Languages