Manualslib.com - The Global Manuals Library

HUAWEI STS-3000K-H1 INSTALLATION MANUAL

Quick Links

Commissioning
Product Overview
Sts-6000K-H1 Transformer Room

Table of Contents

About This Document
Table of Contents
Safety Precautions
General Safety
Operator Qualifications
Electrical Safety
Site Requirements
Mechanical Safety
Commissioning
Maintenance and Replacement
Product Overview
Appearance
Components
STS
Room
Room of the STS-3000K-H1
Room of the STS-6000K-H1
Transformer Room
STS-3000K-H1 Transformer Room
STS-6000K-H1 Transformer Room
MV Room
Equipment Installation
Site Requirements
Preparing Tools
Hoisting Equipment
Hoisting Verification
Securing a Container
STS Overall Check
Operating Components

Opening or Closing a Cabinet Door
Interlocking Between STSs with a CVC Ring Main Unit
Operating the Pressure Release Valve
Removing the Fuse Link of the Pressure Release Valve
Installing the Rainproof Canopy for the Pressure Release Valve
Installing a Dehydrating Breather
Installing a Common Dehydrating Breather
Installing a Maintenance-Free Dehydrating Breather
Operating an Oil Surface Thermometer
STS Insulation Tests
Connecting Cables
Preparing Cables
Connecting a PE Cable for the STS
Connecting an AC Input Power Cable
Installing a Lightning Arrester for the Ring Main Unit
Connecting an AC Output Power Cable
Connecting Cables to an SACU
Optional) Connecting Cables to the UPS
Verifying the Installation and Cable Connections
A FAQ
How Do I Repair Paint Damage on the Container
Requirements for the STS-3000K-H1 Foundation Dimensions
Requirements for the STS-6000K-H1 Foundation Dimensions
B Acronyms and Abbreviations
Other ManualsLib Projects

STS-(3000K, 6000K)-H1 Smart Transformer Station (Spain, Eiffage Turroneros)

Installation Guide

Issue 02

Date 2020-02-21

HUAWEI TECHNOLOGIES CO., LTD.

Copyright © Huawei Technologies Co., Ltd. 2020. All rights reserved.

No part of this document may be reproduced or transmitted in any form or by any means without prior written consent of Huawei Technologies Co., Ltd.

Trademarks and Permissions

HUAWEI and other Huawei trademarks are trademarks of Huawei Technologies Co., Ltd.

All other trademarks and trade names mentioned in this document are the property of their respective holders.

Notice

The purchased products, services and features are stipulated by the contract made between Huawei and the customer. All or part of the products, services and features described in this document may not be within the purchase scope or the usage scope. Unless otherwise specified in the contract, all statements, information, and recommendations in this document are provided "AS IS" without warranties, guarantees or representations of any kind, either express or implied.

The information in this document is subject to change without notice. Every effort has been made in the preparation of this document to ensure accuracy of the contents, but all statements, information, and recommendations in this document do not constitute a warranty of any kind, express or implied.

Huawei Technologies Co., Ltd.

Address: Huawei Industrial Base
Bantian, Longgang
Shenzhen 518129
People's Republic of China

Website: https://e.huawei.com

About This Document

Purpose

This document describes how to install the STS-3000K-H1 and STS-6000K-H1 smart transformer stations (STSs for short). Before installing the STS, read through this document, get familiar with the features, functions, and safety precautions provided in this document.

Figures used in this document are for reference only.

Intended Audience

This document is intended for photovoltaic (PV) plant operators and qualified electricians.

Symbol Conventions

The symbols that may be found in this guide are defined as follows.

Symbol	Description
DANGER	Indicates a hazard with a high level of risk which, if not avoided, will result in death or serious injury.
WARNING	Indicates a hazard with a medium level of risk which, if not avoided, could result in death or serious injury.
CAUTION	Indicates a hazard with a low level of risk which, if not avoided, could result in minor or moderate injury.
NOTICE	Indicates a potentially hazardous situation which, if not avoided, could result in equipment damage, data loss, performance deterioration, or unanticipated results. NOTICE is used to address practices not related to personal injury.
NOTE	Supplements the important information in the main text. NOTE is used to address information not related to personal injury, equipment damage, and environment deterioration.

Copyright © Huawei Technologies Co., Ltd.

Change History

Updates between document issues are cumulative. The latest document issue contains all the changes in earlier issues.

Issue 02 (2020-02-21)

Updated 7.4 Installing a Lightning Arrester for the Ring Main Unit.

Issue 01 (2019-12-09)

This issue is used for first office application (FOA).

 Copyright © Huawei Technologies Co., Ltd.

Contents

About This Document ii

1 Safety Precautions 1

1.1 General Safety 1
1.2 Operator Qualifications 2
1.3 Electrical Safety 3
1.4 Site Requirements 4
1.5 Mechanical Safety 4
1.6 Commissioning 6
1.7 Maintenance and Replacement 7

2 Product Overview 8

2.1 Appearance 8
2.2 Components 10
2.2.1 STS 10
2.2.2 LV Room 11
2.2.2.1 LV Room of the STS-3000K-H1 11
2.2.2.2 LV Room of the STS-6000K-H1 11
2.2.3 Transformer Room 12
2.2.3.1 STS-3000K-H1 Transformer Room 12
2.2.3.2 STS-6000K-H1 Transformer Room 14
2.2.4 MV Room 16

3 Equipment Installation 18

3.1 Site Requirements 18
3.2 Preparing Tools 20
3.3 Hoisting Equipment 22
3.4 Hoisting Verification 27
3.5 Securing a Container 27

4 STS Overall Check 29

5 Operating Components 30

5.1 Opening or Closing a Cabinet Door 30
5.2 Interlocking Between STSs with a CVC Ring Main Unit 34
5.3 Operating the Pressure Release Valve 36

 Copyright © Huawei Technologies Co., Ltd.

5.3.1 Removing the Fuse Link of the Pressure Release Valve 36
5.3.2 Installing the Rainproof Canopy for the Pressure Release Valve 36
5.4 Installing a Dehydrating Breather 37
5.4.1 Installing a Common Dehydrating Breather 38
5.4.2 Installing a Maintenance-Free Dehydrating Breather 39
5.5 Operating an Oil Surface Thermometer 42

6 STS Insulation Tests 44

7 Connecting Cables 45

7.1 Preparing Cables 46
7.2 Connecting a PE Cable for the STS 47
7.3 Connecting an AC Input Power Cable 49
7.4 Installing a Lightning Arrester for the Ring Main Unit 52
7.5 Connecting an AC Output Power Cable 55
7.6 Connecting Cables to an SACU 58
7.7 (Optional) Connecting Cables to the UPS 61

8 Verifying the Installation and Cable Connections 67

A FAQ 68

A.1 How Do I Repair Paint Damage on the Container? 68
A.2 Requirements for the STS-3000K-H1 Foundation Dimensions 72
A.3 Requirements for the STS-6000K-H1 Foundation Dimensions 73

B Acronyms and Abbreviations 75

1 Safety Precautions

1.1 General Safety

Statement

Before installing, operating, and maintaining the equipment, read this document and observe all the safety instructions on the equipment and in this document.

The "NOTICE", "CAUTION", "WARNING", and "DANGER" statements in this document do not cover all the safety instructions. They are only supplements to the safety instructions. Huawei will not be liable for any consequence caused by the violation of general safety requirements or design, production, and usage safety standards.

Ensure that the equipment is used in environments that meet its design specifications. Otherwise, the equipment may become faulty, and the resulting equipment malfunction, component damage, personal injuries, or property damage are not covered under the warranty.

Follow local laws and regulations when installing, operating, or maintaining the equipment. The safety instructions in this document are only supplements to local laws and regulations.

Huawei will not be liable for any consequences of the following circumstances:

- Operation beyond the conditions specified in this document
- Installation or use in environments which are not specified in relevant international or national standards
- Unauthorized modifications to the product or software code or removal of the product
- Failure to follow the operation instructions and safety precautions on the product and in this document
- Equipment damage due to force majeure, such as earthquakes, fire, and storms
- Damage caused during transportation by the customer
- Storage conditions that do not meet the requirements specified in this document

General Requirements

 Copyright © Huawei Technologies Co., Ltd.

DANGER

Do not work with power on during installation.

- Do not install, use, or operate outdoor equipment and cables (including but not limited to moving equipment, operating equipment and cables, inserting connectors to or removing connectors from signal ports connected to outdoor facilities, working at heights, and performing outdoor installation) in harsh weather conditions such as lightning, rain, snow, and level 6 or stronger wind.
- After installing the equipment, remove idle packing materials such as cartons, foam, plastics, and cable ties from the equipment area.
- In the case of a fire, immediately leave the building or the equipment area, and turn on the fire alarm bell or make an emergency call. Do not enter the building on fire in any case.
- Do not scrawl, damage, or block any warning label on the equipment.
- Tighten the screws using tools when installing the equipment.
- Understand the components and functioning of a grid-tied PV power system and relevant local standards.
- Repaint any paint scratches caused during equipment transportation or installation in a timely manner. Equipment with scratches cannot be exposed to an outdoor environment for a long period of time.
- Do not open the host panel of the equipment.
- Do not install other equipment on the top of a container without evaluation by Huawei.
- Do not perform operations such as arc welding, drilling, and cutting on the top of a container. Otherwise, the top of the container may be damaged, which may cause water leakage. When performing operations (such as hoisting) over the top of a container, take measures to protect the top of the container against damage. After construction, check the container for protective paint damage. If the top of the container is damaged, repair it in a timely manner.

Personal Safety

- If there is a probability of personal injury or equipment damage during operations on the equipment, immediately stop the operations, report the case to the supervisor, and take feasible protective measures.
- Use tools correctly to avoid hurting people or damaging the equipment.
- Do not touch the energized equipment, as the enclosure is hot.
- When operating or maintaining the equipment, wear high-voltage insulation gloves, a safety helmet, insulation shoes, and insulation clothing. When commissioning or operating the ring main unit, operate the general protection chamber using an insulated stool.

1.2 Operator Qualifications

- Personnel who plan to install or maintain Huawei equipment must receive thorough training, understand all necessary safety precautions, and be able to correctly perform all operations.
- Only qualified professionals or trained personnel are allowed to install, operate, and maintain the equipment.

 Copyright © Huawei Technologies Co., Ltd.

- Only qualified professionals are allowed to remove safety facilities and inspect the equipment.
- Personnel who will operate the equipment, including operators, trained personnel, and professionals, should possess the local national required qualifications in special operations such as high-voltage operations, working at heights, and operations of special equipment.
- Only professionals or authorized personnel are allowed to replace the equipment or components (including software).

NOTE

- Professionals: personnel who are trained or experienced in equipment operations and are clear of the sources and degree of various potential hazards in equipment installation, operation, and maintenance
- Trained personnel: personnel who are technically trained, have required experience, are aware of possible hazards on themselves in certain operations, and are able to take protective measures to minimize the hazards on themselves and other people
- Operators: operation personnel who may come in contact with the equipment, except trained personnel and professionals

1.3 Electrical Safety

Grounding

- For the equipment that needs to be grounded, install the ground cable first when installing the equipment and remove the ground cable last when removing the equipment.
- Do not damage the ground conductor.
- Do not operate the equipment in the absence of a properly installed ground conductor.
- Ensure that the equipment is connected permanently to the protective ground. Before operating the equipment, check its electrical connection to ensure that it is securely grounded.

General Requirements

DANGER

Before connecting cables, ensure that the equipment is intact. Otherwise, electric shocks or fire may occur.

- Ensure that all electrical connections comply with local electrical standards.
- Obtain approval from the local electric utility company before using the equipment in grid-tied mode.
- Ensure that the cables you prepared meet local regulations.
- Use dedicated insulated tools when performing high-voltage operations.

AC and DC Power

 Copyright © Huawei Technologies Co., Ltd.

DANGER

Do not connect or disconnect power cables with power on. Transient contact between the core of the power cable and the conductor will generate electric arcs or sparks, which may cause fire or personal injury.

- Before making electrical connections, switch off the disconnector on the upstream device to cut off the power supply if people may contact energized components.
- Before connecting a power cable, check that the label on the power cable is correct.
- If the equipment has multiple inputs, disconnect all the inputs before operating the equipment.

Cabling

- When routing cables, ensure that a distance of at least 30 mm exists between the cables and heat-generating components or areas. This prevents damage to the insulation layer of the cables.
- Bind cables of the same type together. When routing cables of different types, ensure that they are at least 30 mm away from each other.
- Ensure that the cables used in a grid-tied PV power system are properly connected and insulated and meet specifications.

1.4 Site Requirements

- Ensure that the equipment is installed in a well ventilated environment.
- To prevent fire due to high temperature, ensure that the ventilation vents or heat dissipation system are not blocked when the equipment is running.
- Do not expose the equipment to flammable or explosive gas or smoke. Do not perform any operation on the equipment in such environments.

1.5 Mechanical Safety

Hoisting Devices

DANGER

Do not walk under hoisted objects.

- Only trained and qualified personnel should perform hoisting operations.
- Check that hoisting tools are available and in good condition.
- Before hoisting objects, ensure that hoisting tools are firmly secured onto a load-bearing object or wall.
- Ensure that the angle formed by two hoisting cables is no more than 90 degrees, as shown in the following figure.

 Copyright © Huawei Technologies Co., Ltd.

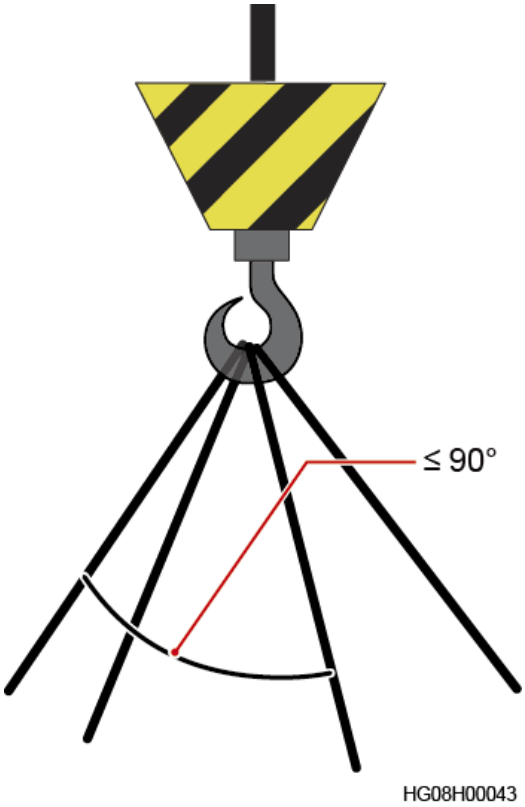

- Do not drag steel ropes and hoisting tools or bump hoisted objects against hard objects during hoisting.

Using Ladders

- Use wooden or fiberglass ladders when you need to perform live working at heights.
- When a step ladder is used, ensure that the pull ropes are secured and the ladder is held firm.
- Before using a ladder, check that it is intact and confirm its load bearing capacity. Do not overload it.
- Ensure that the wider end of the ladder is at the bottom, or protective measures have been taken at the bottom to prevent the ladder from sliding.
- Ensure that the ladder is securely positioned. The recommended angle for a ladder against the floor is 75 degrees, as shown in the following figure. An angle rule can be used to measure the angle.

 Copyright © Huawei Technologies Co., Ltd.

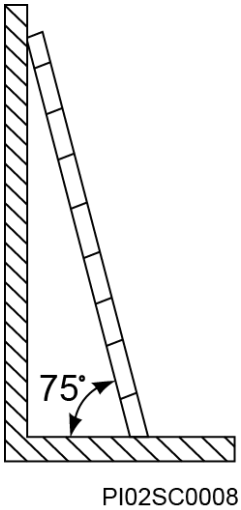

- When climbing a ladder, take the following precautions to reduce risks and ensure safety:
  - Keep your body steady.
  - Do not climb higher than the fourth rung of the ladder from the top.
  - Ensure that your body's center of gravity does not shift outside the legs of the ladder.

Drilling Holes

When drilling holes into a wall or floor, observe the following safety precautions:

- Wear goggles and protective gloves when drilling holes.
- When drilling holes, protect the equipment from shavings. After drilling, clean up any shavings that have accumulated inside or outside the equipment.

Moving Heavy Objects

- Be cautious to avoid injury when moving heavy objects.

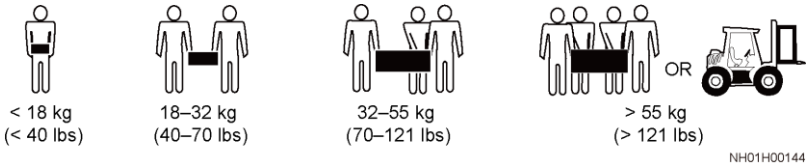

- When moving the equipment by hand, wear protective gloves to prevent injuries.

1.6 Commissioning

When the equipment is powered on for the first time, ensure that professional personnel set parameters correctly. Incorrect settings may result in inconsistency with local certification and affect the normal operation of the equipment.

1.7 Maintenance and Replacement

NOTICE

- After the equipment stops running, wait for at least 10 minutes to ensure that the voltage is within the safe range, the transfer switch is in the local position, the ground switch of the circuit breaker cabinet in the ring main unit is switched on, and the ground cable is connected to the low-voltage cabinet. Then you can perform maintenance or repair.
- Before maintaining the transformer station, turn off the switches on the LV side and then the high-voltage (HV) side of the STS.
- Before maintaining the transformer station, turn off the ACB at the LV side and the switch at the HV side, and attach warning labels to ensure that the equipment will not be powered on by accident.

- Maintain the equipment with sufficient knowledge of this document and using proper tools and testing equipment.
- Prior to maintenance, power off the equipment.
- Place temporary warning signs or erect fences to prevent unauthorized access to the maintenance site.
- If the equipment is faulty, contact your dealer.
- The equipment can be powered on only after all faults are rectified. Failing to do so may escalate faults or damage the equipment.

 Copyright © Huawei Technologies Co., Ltd.

2 Product Overview

2.1 Appearance

Figure 2-1 Appearance

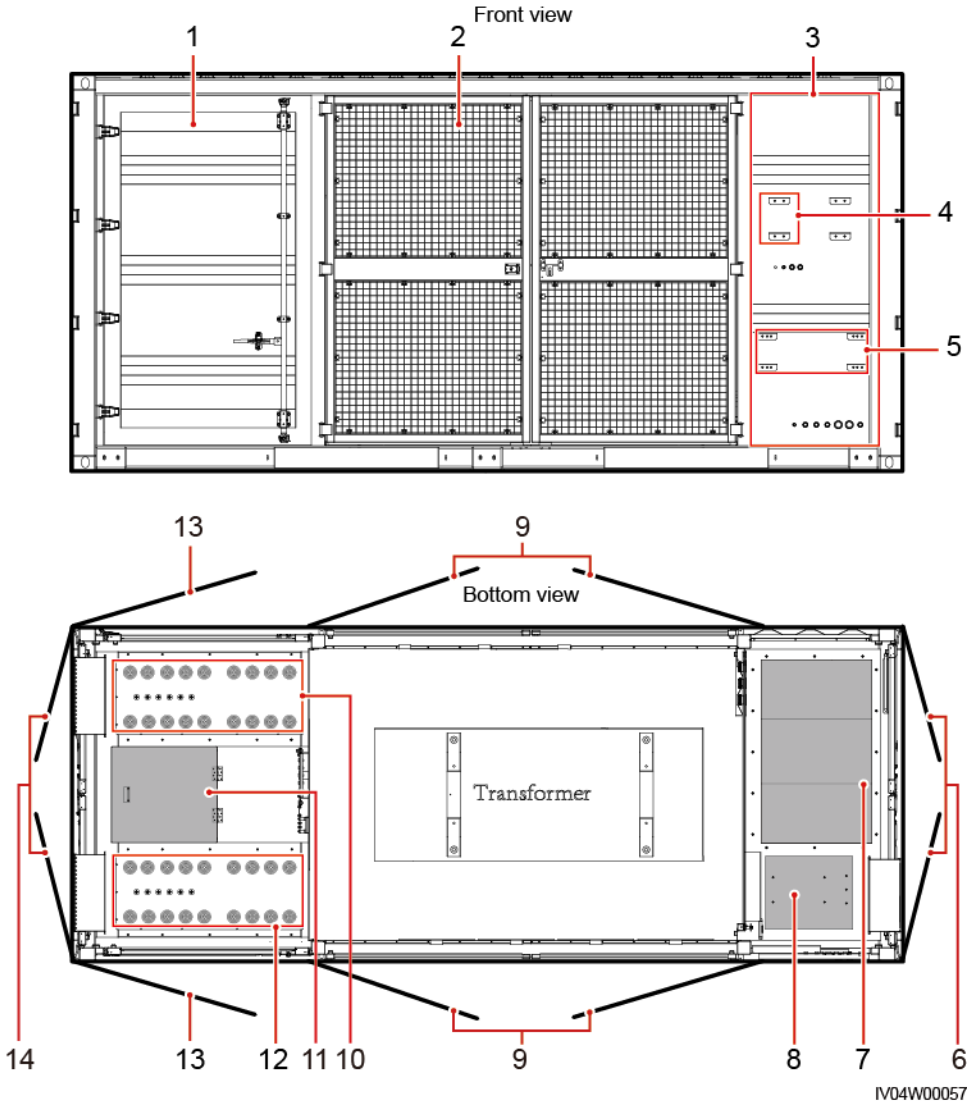

(1) Low-voltage room (LV)	(2) Transformer room (TR)	(3) Medium-voltage room (MV)
(4) Position for the distributed power system (uninterruptible power supply, UPS)	(5) Position for the smart array controller (SACU)	(6) Double-swing door of the MV room
(7) Ring main unit	(8) Auxiliary transformer	(9) Double-swing screen door for the transformer room
(10) AC input cable hole (LV PANEL B)	(11) Manhole entrance	(12) AC input cable hole (LV PANEL A)
(13) Single-swing door for the LV room	(14) Double-swing door for the LV room	

NOTE

The STS-3000K-H1 does not have LV PANEL B configurations.

Figure 2-2 Container dimensions

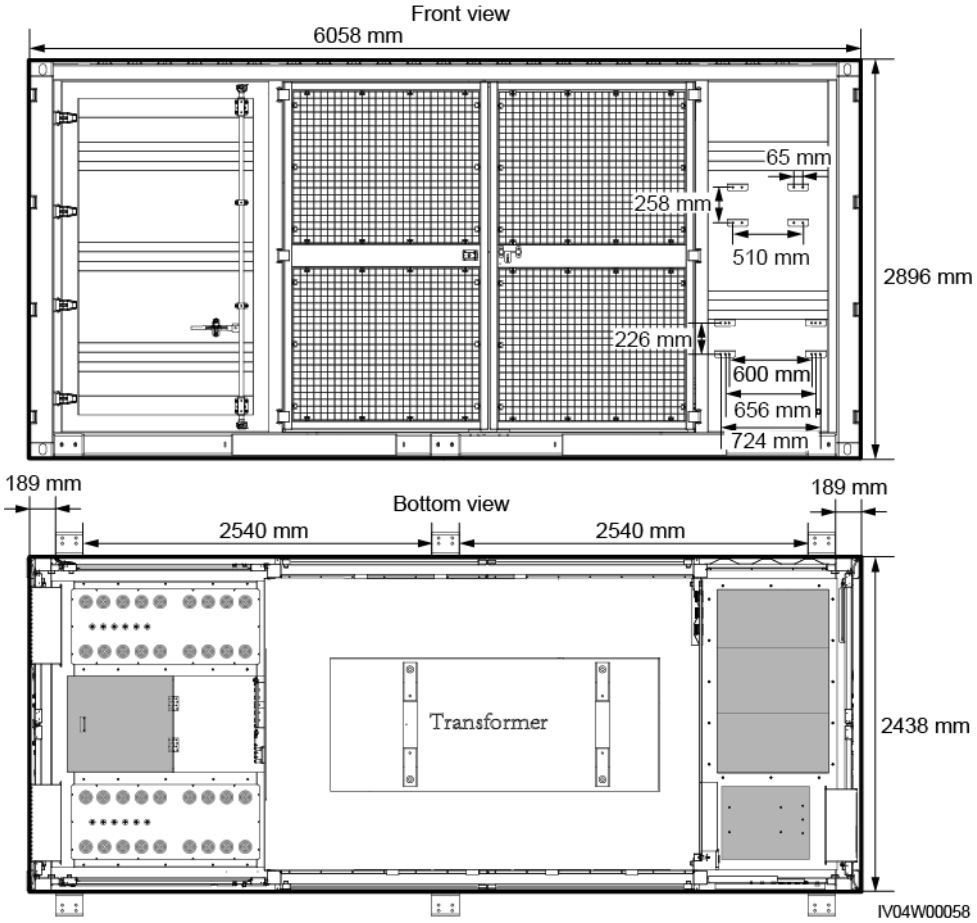

Figure 2-3 Dimensions of the anchor pad

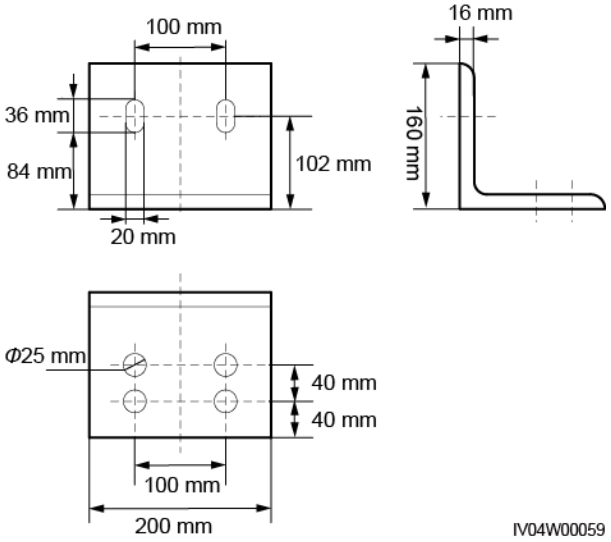

2.2 Components

2.2.1 STS

Figure 2-4 STS components

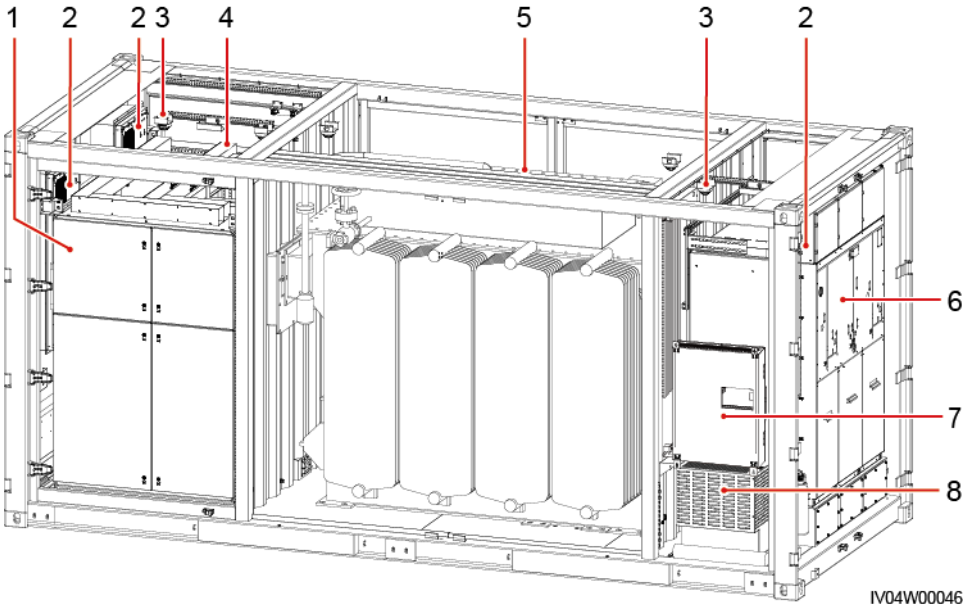

(1) LV PANEL A (2) Heat exchanger (3) Smoke sensor

(4) LV PANEL B (5) Transformer (6) Ring main unit

(7) Power distribution box (PDB) (8) Auxiliary transformer

2.2.2 LV Room

2.2.2.1 LV Room of the STS-3000K-H1

The LV room is a single-side cabinet structure. To perform any operation, you only need to open the door of the LV cabinet without entering the STS.

Figure 2-5 LV PANEL

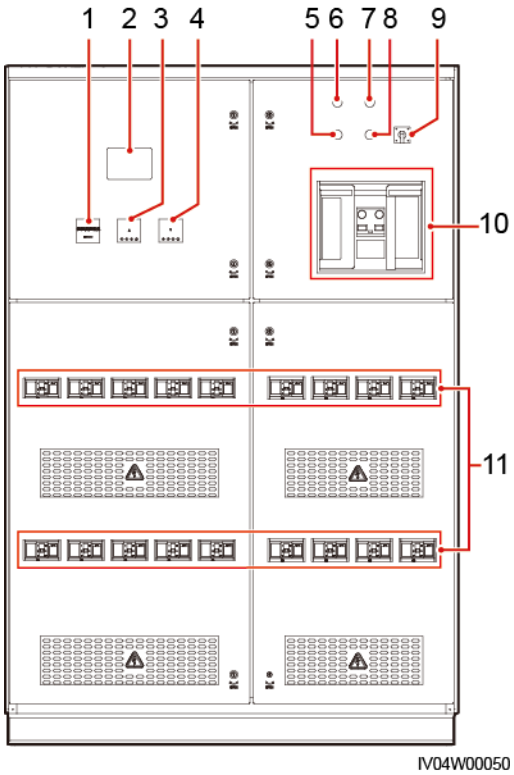

(1) Temperature and humidity controller	(2) Measurement and control device	(3) Digital ammeter
(4) Digital voltmeter	(5) OFF button	(6) OFF indicator
(7) ON indicator	(8) ON button	(9) Transfer switch
(10) Air circuit breaker (ACB)	(11) AC input switch	

NOTE

The LV room of a particular model uses a multifunctional meter that combines the functions of parts 3 and 4. The following figure uses the separate voltmeter and ammeter as an example.

2.2.2.2 LV Room of the STS-6000K-H1

The LV room is a single-side cabinet structure. To perform any operation, you only need to open the door of the LV cabinet without entering the STS.

 Copyright © Huawei Technologies Co., Ltd.

Figure 2-6 LV PANEL

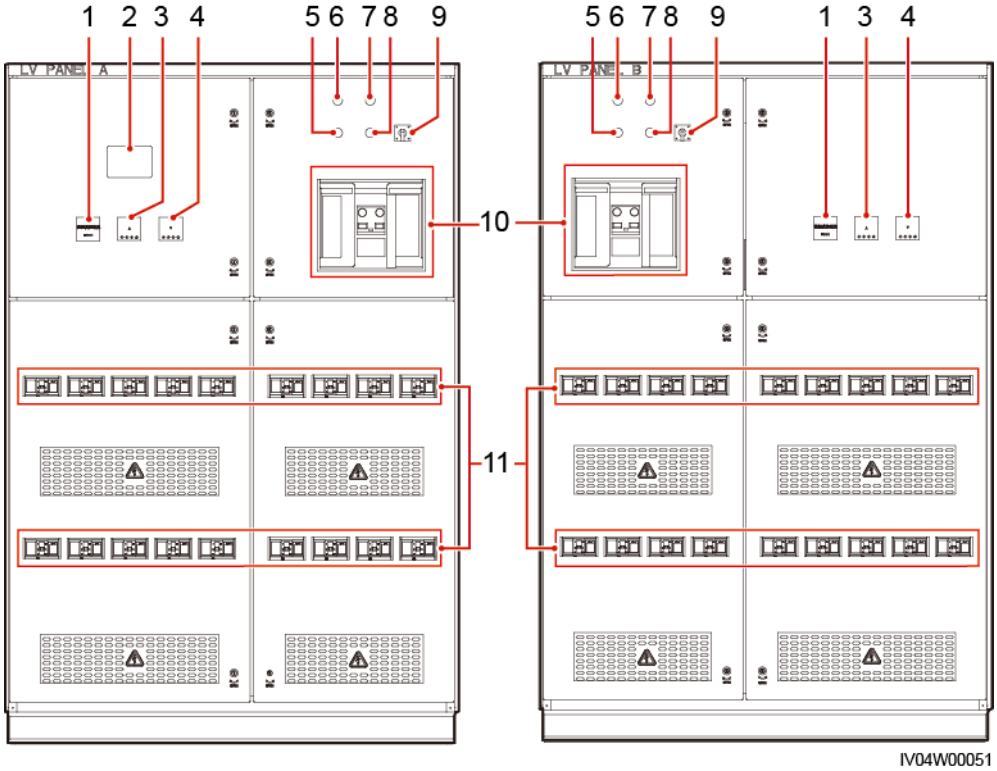

(1) Temperature and humidity controller	(2) Measurement and control device	(3) Digital ammeter
(4) Digital voltmeter	(5) OFF button	(6) OFF indicator
(7) ON indicator	(8) ON button	(9) Transfer switch
(10) Air circuit breaker (ACB)	(11) AC input switch	

NOTE

The LV room of a particular model uses a multifunctional meter that combines the functions of parts 3 and 4. The following figure uses the separate voltmeter and ammeter as an example.

2.2.3 Transformer Room

2.2.3.1 STS-3000K-H1 Transformer Room

The transformer room is used to convert the LV AC power into the MV AC power. The main equipment is a transformer configured with gas, oil temperature, pressure, and oil level protection. A comprehensive protection device is also configured in the MV room for the transformer.

 Copyright © Huawei Technologies Co., Ltd.

Figure 2-7 Transformer

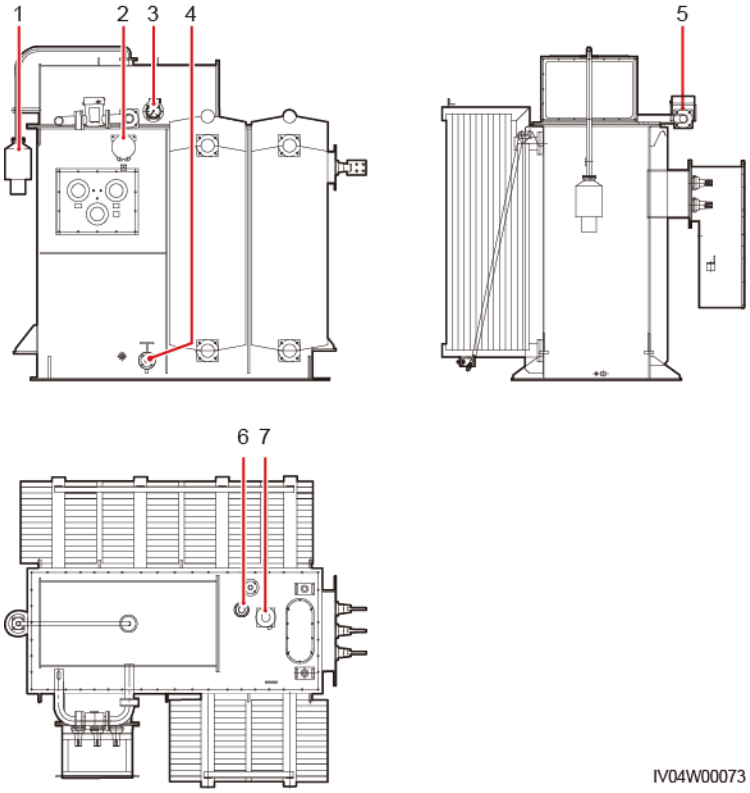

No.	Item	Function	Description
1	Dehydrating breather	-	The insulation oil in the conservator is connected to the atmosphere through a dehydrating breather with silica gel to absorb moisture and impurities in the air and maintain the performance of the insulation oil.
2	Oil surface thermometer	Measures and controls the temperature of the top layer of transformer oil.	Displays the top layer of transformer oil in real time and issues alarms and trip signals through the built-in temperature control switch.
3	Oil level gauge	Indicates the oil level.	Indicates the oil level of the transformer oil cabinet and reports the alarms of high and low oil levels.
4	Oil feed and drain valve	Refills or drains oil.	• Oil refilling: Refill the transformer oil using an uncontaminated metal or non-rubber hose and oil injection equipment. (Note: Prevent air from entering.) • Oil draining: Lead the transformer oil to a container using an uncontaminated metal or non-rubber hose.
5	Gas relay	Generates a gas accumulation alarm or an oil flow trip.	• When a minor fault occurs on the transformer, the oil of the transformer generates gas. The gas will rise and enter the gas relay. In this case, the

 Copyright © Huawei Technologies Co., Ltd.

No.	Item	Function	Description
			reed switch contact for gas accumulation will be closed to send signals. When there is too much gas, it can be released through the gas nozzle of the gas relay. • When there is a strong gas flow in the transformer, the reed switch contact for oil flow will be closed and the circuit breaker of the ring main unit will trip.
6	Off-load tap changer	Regulates the voltage.	There are five levels. Level 1 indicates the maximum tapping value, level 3 indicates the rated tapping value, and level 5 indicates the minimum tapping value.
7	Pressure relief valve	Releases pressure.	If a transformer is faulty, a large amount of gas is generated, and the pressure of the insulation oil increases sharply. When the certain threshold is reached, the transformer oil is discharged and the internal pressure of the transformer decreases to a normal value. At the same time, a signal is sent to trip the circuit breaker in the ring main unit.

2.2.3.2 STS-6000K-H1 Transformer Room

The transformer room is used to convert the LV AC power into the MV AC power. The main equipment is a transformer configured with gas, oil temperature, pressure, and oil level protection. A comprehensive protection device is also configured in the MV room for the transformer.

 Copyright © Huawei Technologies Co., Ltd.

Figure 2-8 Transformer

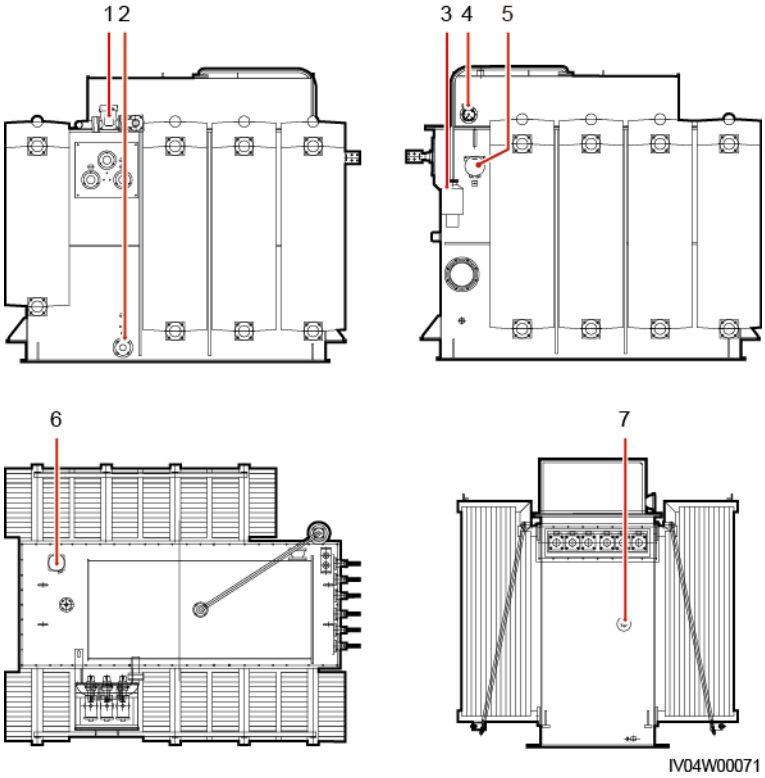

No.	Item	Function	Description
1	Gas relay	Generates a gas accumulation alarm or an oil flow trip.	• When a minor fault occurs on the transformer, the oil of the transformer generates gas. The gas will rise and enter the gas relay. In this case, the reed switch contact for gas accumulation will be closed to send signals. When there is too much gas, it can be released through the gas nozzle of the gas relay. • When there is a strong gas flow in the transformer, the reed switch contact for oil flow will be closed and the circuit breaker of the ring main unit will trip.
2	Oil feed and drain valve	Refills or drains oil.	• Oil refilling: Refill the transformer oil using an uncontaminated metal or non-rubber hose and oil injection equipment. (Note: Prevent air from entering.) • Oil draining: Lead the transformer oil to a container using an uncontaminated metal or non-rubber hose.
3	Dehydrating breather	-	The insulation oil in the conservator is connected to the atmosphere through a dehydrating breather with silica gel to absorb moisture and impurities in the air and maintain the performance of the

No.	Item	Function	Description
			insulation oil.
4	Oil level gauge	Indicates the oil level.	Indicates the oil level of the transformer oil cabinet and reports the alarms of high and low oil levels.
5	Oil surface thermometer	Measures and controls the temperature of the top layer of transformer oil.	Displays the top layer of transformer oil in real time and issues alarms and trip signals through the built-in temperature control switch.
6	Pressure relief valve	Releases pressure.	If a transformer is faulty, a large amount of gas is generated, and the pressure of the insulation oil increases sharply. When the certain threshold is reached, the transformer oil is discharged and the internal pressure of the transformer decreases to a normal value. At the same time, a signal is sent to trip the circuit breaker in the ring main unit.
7	Off-load tap changer	Regulates the voltage.	There are five levels. Level 1 indicates the maximum tapping value, level 3 indicates the rated tapping value, and level 5 indicates the minimum tapping value.

2.2.4 MV Room

NOTE

No cable connector is installed in cabinet G1 or G3. The cable connectors in the figure are for reference only. The actual position and dimensions may vary.

 Copyright © Huawei Technologies Co., Ltd.

Figure 2-9 CGM.3 (CVC)

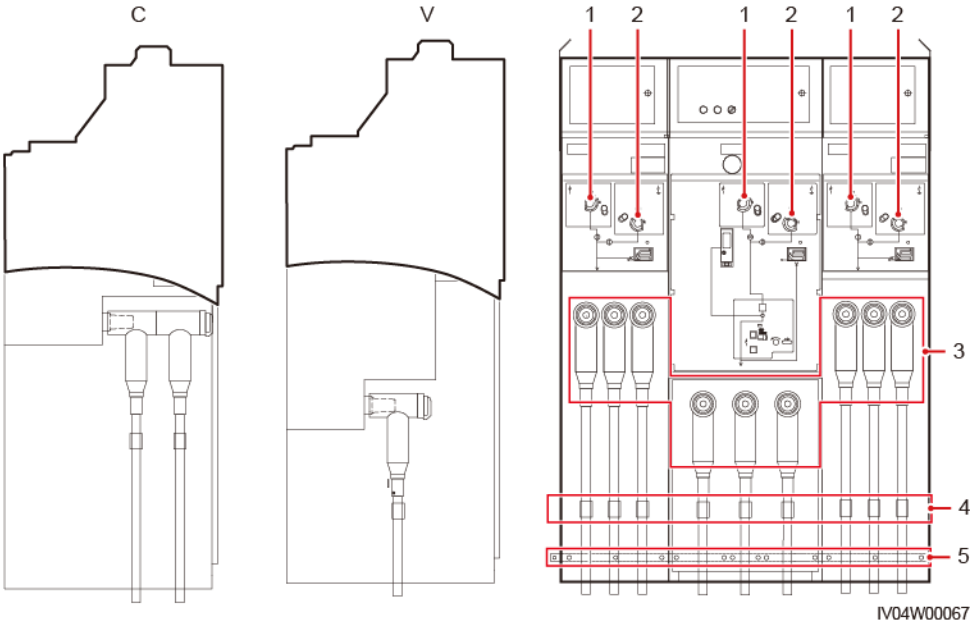

(1) Operation hole of grounding switches

(2) Operation hole of disconnectors

(3) Cable connectors

(4) Cable clamps

(5) Ground bar

3 Equipment Installation

3.1 Site Requirements

Site Selection

STSs are applicable to common outdoor scenarios. The site should:

- Not be located in a low-lying land. The horizontal level of the site should be above the highest water level of that area.
- Be solid without spongy or soft soil, but not be prone to water accumulation or subsidence.
- Be a well ventilated place.
- Be far away from sources of strong variation, loud noises, and strong electromagnetic interference.
- Avoid places where underground facilities exist.
- Be far away from dust, oil smoke, harmful gas, and corrosive, flammable, or explosive objects.
- Be at least 500 m away from airports, landfills, river banks, seacoasts, and dams.
- Be an open area and at least 10 m from obstacles in all directions.
- Be at least 50 m away from residential areas to avoid noise pollution.
- Have a temperature ranging from –25°C to +60°C. When the ambient temperature exceeds 55°C, select an installation place with shade or set up an awning.

Foundation

Before installation, build a concrete pad and a trench on the selected ground. The foundation construction requirements are as follows:

- The dimensions of the foundation should meet the installation and bearing requirements of the STS.
- The average foundation strength should exceed 100 kg/cm^2.
- The horizontal error between the foundation and the contact surface of the STS should be less than 5 mm.
- Bury a ground grid and reserve a ground copper bar at the ground position of the STS. The ground copper bar should be a hot-dip zinc-coated flat steel sheet with a cross-sectional area of 60 mm x 5 mm. One end of the copper bar should be connected to

 Copyright © Huawei Technologies Co., Ltd.

the embedded ground grid, and the other end should be connected to the ground point of the container. When burying a ground grid, leave a sufficient slack for the ground bar to ensure its connection to the STS.

- The ground resistance for the STS should be less than or equal to 0.1 ohm.
- The STS adopts bottom cabling. Cables should be embedded under the LV room and MV room in advance.
- The inner diameter of the protective tube should not be less than 1.5 times the outer diameter of the cable (including the protective layer).
- The foundation should meet the local drainage requirements for the local historical maximum rainfall. Drained water should be disposed of in accordance with local laws and regulations.x

Check Items

No.	Check Item	Acceptance Criteria
1	Platform space	• Scenario in which the distance between the platform and the ground is less than or equal to 0.2 m: The distance between the container and the platform is 0.1 m to 0.2 m. • Scenario in which the distance between the platform and the ground is 0.2 m to 0.5 m: The distance between the container and the platform is greater than or equal to 0.8 m. • Scenario in which the distance between the platform and the ground is greater than 0.5 m: The distance between the container and the platform is greater than or equal to 1.3 m.
2	Cabling space at the bottom	• If there is no maintenance space at the bottom, it is recommended that the cabling space at the bottom of the container be no less than 1.2 m. • If there is maintenance space at the bottom, it is recommended that the cabling space at the bottom of the container be no less than 1.5 m.
3	Cable	• The bending radius of the LV and MV cables is not less than 15 times the cable diameter. • The voltage drop of the farthest loop does not exceed 5%. • The sensitivity, voltage level, and thermal stability of the cables meet the local design specifications. • The MV cable connector matches the size of the cables used in the project. A sealing tube is used to prevent dust condensation and arcing that may damage the cable connector.
4	Pressure releasing pathway	• A pressure releasing pathway is reserved under the MV room. It is recommended that the STS be built on posts. The distance between the bottom of STS and the ground is greater than or equal to 300 mm. • It is recommended that protective plates be installed on the door and side of the MV room. The purpose is to prevent people around the STS from being burnt by an arc explosion.

 Copyright © Huawei Technologies Co., Ltd.

3.2 Preparing Tools

Installation Tools

Tool			
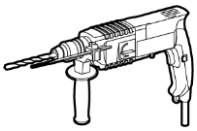 Hammer drill Drill bit: Φ26 mm	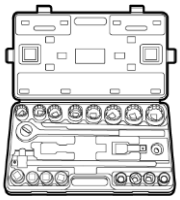 Socket wrench	Torque wrench	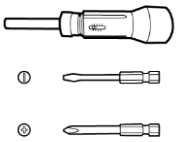 Torque screwdriver Phillips head: ST4.8, M4, M5, M6 Flat head: M3
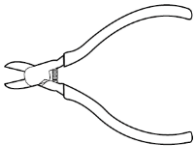 Diagonal pliers	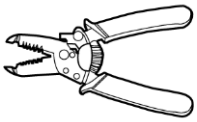 Wire strippers	Adjustable wrench Opening: 14 mm, 18 mm	Rubber mallet
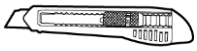 Utility knife	Nipper	Open-end torque wrench Opening: 18 mm, 29 mm	Combination wrench
Pipe wrench	Allen wrench (M6)	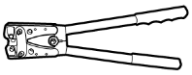 Crimping tool	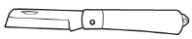 Electrician's knife
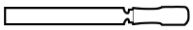 File	Vacuum cleaner	Multimeter	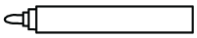 Marker

Tool			
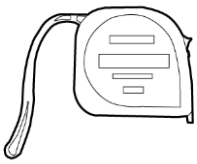 Measuring tape	Bubble or digital level	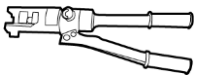 Hydraulic pliers	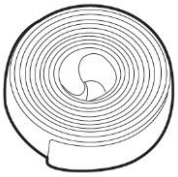 Heat shrink tubing
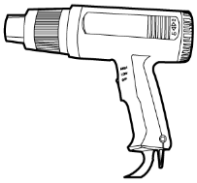 Heat gun	Cable tie	Leather measuring tape	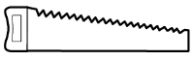 Hacksaw
Cable stripper	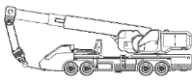 Crane Hoisting capability ≥ 50 t; working radius ≥ 10 m	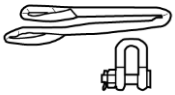 Lifting rope and fastener Length of the lifting rope ≥ 6.5 m	Claw hammer
Step ladder	N/A	N/A	N/A

Safety Tools

Tool			
Insulated ladder	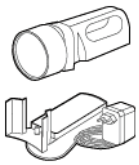 Flashlight	Spare fuse for MV switchgear	Access key

Tool			
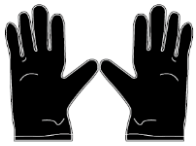 Safety gloves	Safety goggles	Safety hermit	Insulated shoes
Fire extinguisher	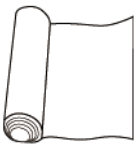 Insulation pad	Insulation gloves	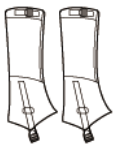 Snake-proof gaiters
Reflective vest	N/A	N/A	N/A
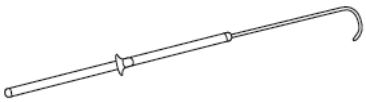 Rescue pole		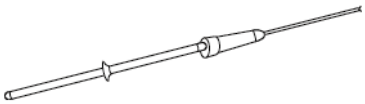 Voltage detector	

NOTE

- The tool pictures are for reference only.
- The tool tables may not list out some tools required onsite. Onsite installation personnel and the customer need to prepare the tools based on site requirements.
- Some dedicated tools and installation materials supplied with the product may not be listed in this table.

3.3 Hoisting Equipment

NOTICE

- Before hoisting, ensure that the crane and hoisting ropes meet the load-bearing requirements.
- When installing or removing the hoisting equipment, do not drag it on the container to prevent scratches.
- Before installing the equipment, check the container for damage, such as holes and cracks, and check the equipment model. If the appearance is abnormal or the equipment model is incorrect, contact your dealer.

Table 3-1 Parameters for hoisting the container

Model	Packed Weight	Steel Rope Length	Steel Rope Quantity
STS-3000K-H1	< 15 t	> 6.5 m	4 PCS
STS-6000K-H1	< 23 t	> 6.5 m	4 PCS

Hoisting Precautions

Stage	Precautions
Before hoisting	Ensure that the crane can hoist a load heavier than 50 t, and the working radius is not less than 10 m. If the onsite environment does not meet the required working conditions, ask a professional to assess the conditions.
	Only trained and qualified personnel should perform hoisting operations.
	Check that hoisting tools are available and in good condition.
	Ensure that the hoisting tools are secured to a load-bearing object or wall.
	The weather condition should be good without wind when the container needs to be hoisted outdoors.
	Ensure that the crane and steel hoisting ropes provide the required bearing capacity.
	All doors of the container should be locked.
	Ensure that steel cables are securely connected.
	It is recommended that the container be hoisted from left to right or from right to left to ensure successful hoisting.
During hoisting	Do not allow any unauthorized person to enter the hazardous areas and never stand under the crane arm.
	Ensure that the crane is properly located and avoid long-distance hoisting.

 Copyright © Huawei Technologies Co., Ltd.

Stage	Precautions
	Ensure that the container is stable and the diagonal gradient of the container is less than or equal to 5 degrees.
	Ensure that the angle between every two ropes is less than or equal to 90 degrees.
	Lift and land the container slowly to prevent shock to equipment inside it.
	Remove the ropes after ensuring that the container is placed evenly on the container bases.
	Do not drag steel ropes and hoisting tools or bump hoisted objects against hard objects during hoisting.
	Secure the container you have hoisted before hoisting another container.

Procedure

Step 1 Determine the installation position of the container based on the foundation design drawings.

Step 2 Measure the support points for the container on the foundation. Ensure that the support points are on the same plane and the deviation is no more than 5 mm.

Step 3 Hoist the container to the installation position using a crane.

 Copyright © Huawei Technologies Co., Ltd.

Figure 3-1 Hoisting equipment

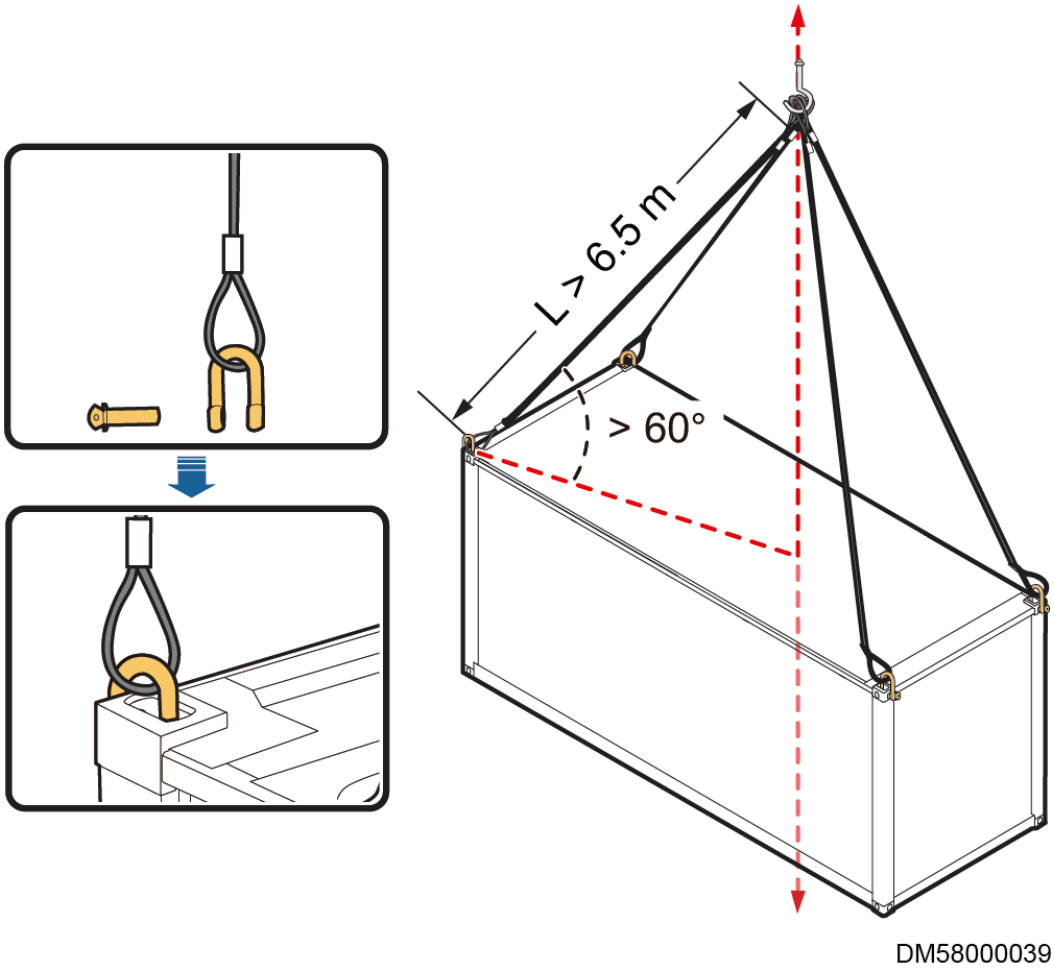

Step 4 Remove the rainproof cloth from the container.

Step 5 Remove the customs lock using a pressure clamp.

Step 6 Remove the sealing plate.

Figure 3-2 Removing the sealing plate

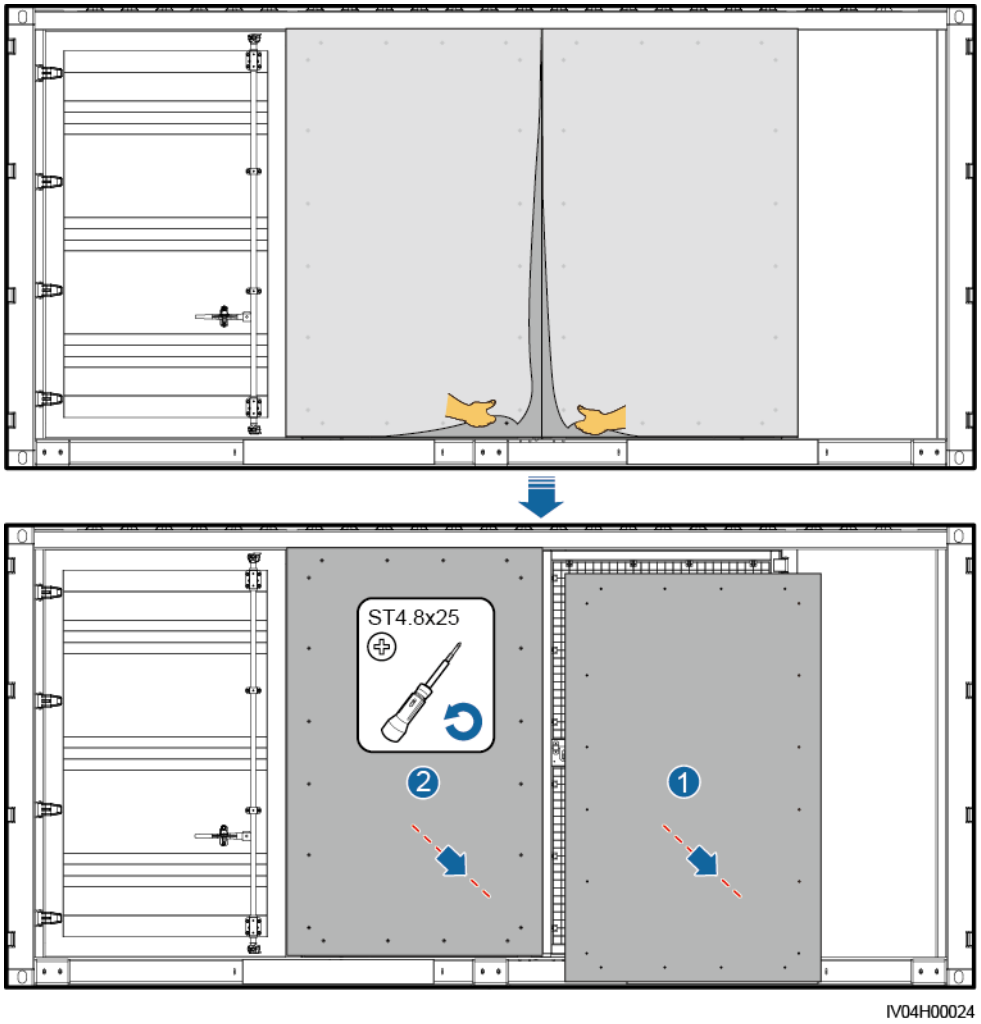

Step 7 Level the container.

NOTICE

If it is difficult to open or close the container door, take out metal washers from the fittings and place them under the container support feet. You can adjust the container door for multiple times until it can be opened and closed smoothly.

Figure 3-3 Leveling the container

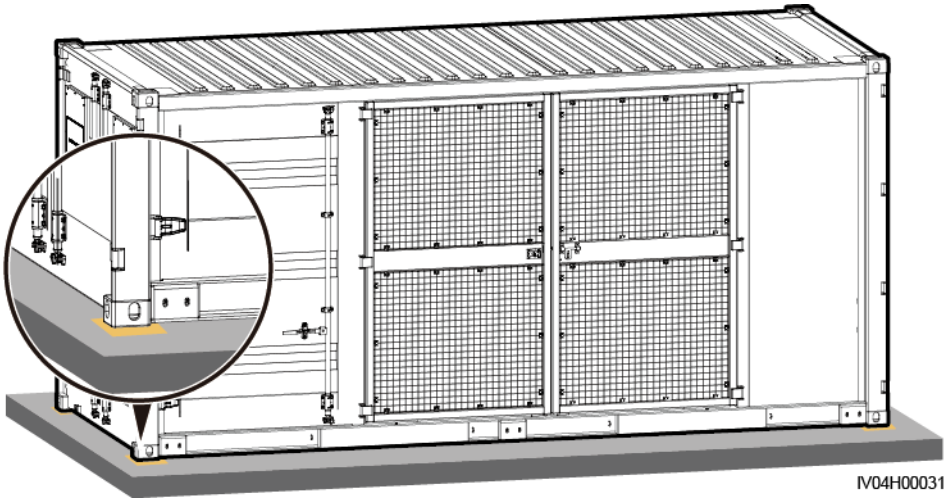

----End

3.4 Hoisting Verification

No.	Check Item	Acceptance Criteria
1	Deliverables	Check whether the deliverables are complete, whether any screw is loose, and whether there is any visible external damage. If any component is missing, any screw is loose, or any damage is found, contact your dealer. **NOTE** ● For details about the supplied number of accessories, see the packing list. ● The documents delivered with the product are important and should be kept properly.
2	Container door	All container doors can be smoothly opened and closed.
3	Container enclosure	The container enclosure is not deformed or cracked.

3.5 Securing a Container

Step 1 Secure a container.

NOTE

- There are four mounting holes where angle steel brackets contact the base. Mark all mounting holes. Each angle steel bracket must be secured by two mounting holes. Preferentially drill the outer two mounting holes. If steel bars in a concrete base block the drill bit, drill the inner mounting holes.
- Ensure that the expansion bolts are tightened when securing the angle steel to the base.

 Copyright © Huawei Technologies Co., Ltd.

Figure 3-4 Securing a container

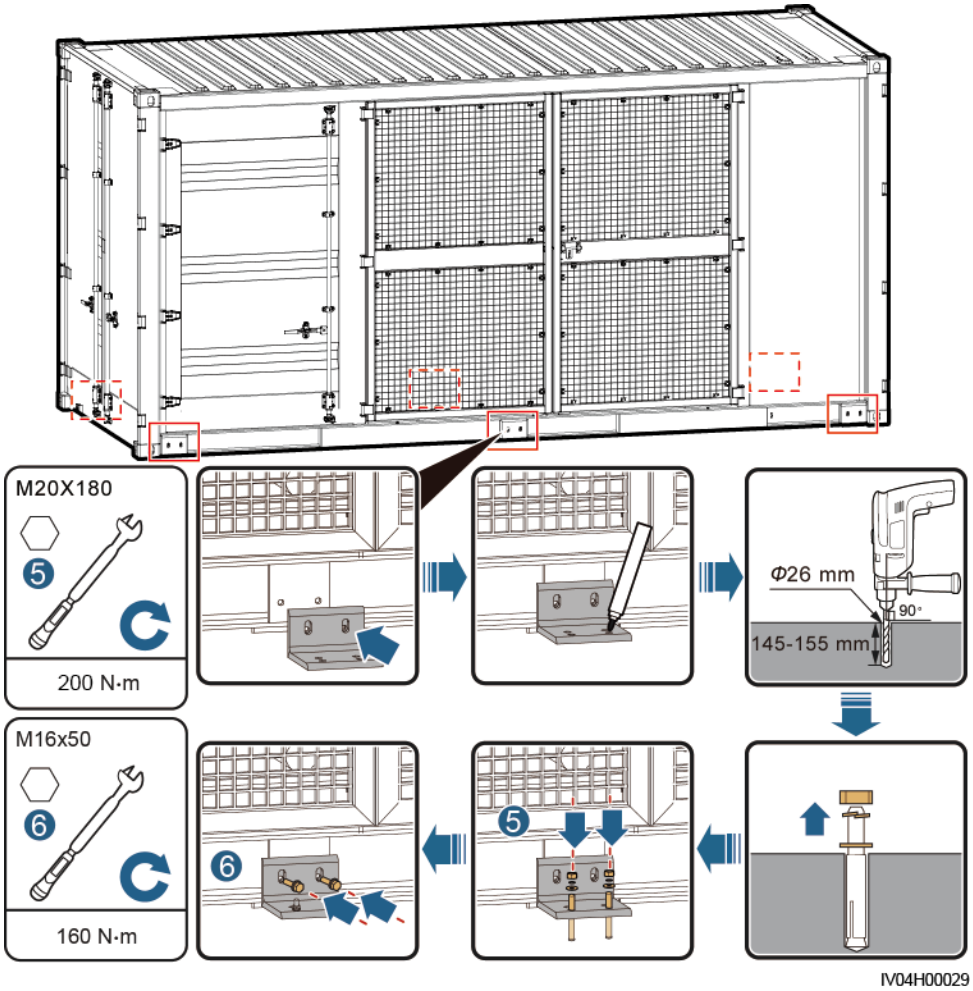

----End

4 STS Overall Check

No.	Check Item	Acceptance Criteria
1	Inside the container	1. There is no foreign matter inside the container, and there is no sign of water immersion. 2. The components in the MV and LV rooms are intact. 3. The enclosure of the transformer is not deformed or damaged. The surface of the transformer is free of oil stains.
2	Contact surface between the container and the base	The container is in good contact with and evenly supported by the base underneath.
3	SF_6 barometer in the ring main unit of the MV room	The pointer of the SF_6 barometer is in the green area and is at a certain distance from the yellow or red area. If the pointer is close to the yellow or red area, take a photo and contact Huawei technical support.
4	Switch mechanical operation test	1. Turn on and off the ACB in the LV cabinet for two times. The operation is successful. 2. Turn on and off all MCCBs in the LV cabinet for two times. The operation is successful. 3. Turn on and off the load switch, circuit breaker, and grounding switch in the ring main unit in sequence for two times. The operation is successful. 4. Operate the interlocking system of the STS for two times. The operation is successful.
5	Inside the LV cabinet	The ground copper bar in the LV cabinet is not loose, screws are not loose or missing, and components are not loose or displaced.
6	Oil level gauge	The oil level displayed on the gauge in the transformer oil cabinet is normal.

 Copyright © Huawei Technologies Co., Ltd.

5 Operating Components

NOTICE

When operating a transformer, ensure that the transformer is in the no-excitation state, that is, the high and low voltage sides of the transformer are not energized.

5.1 Opening or Closing a Cabinet Door

Common Cabinet Door

Step 1 Open the cabinet door.

 Copyright © Huawei Technologies Co., Ltd.

Figure 5-1 Opening a cabinet door

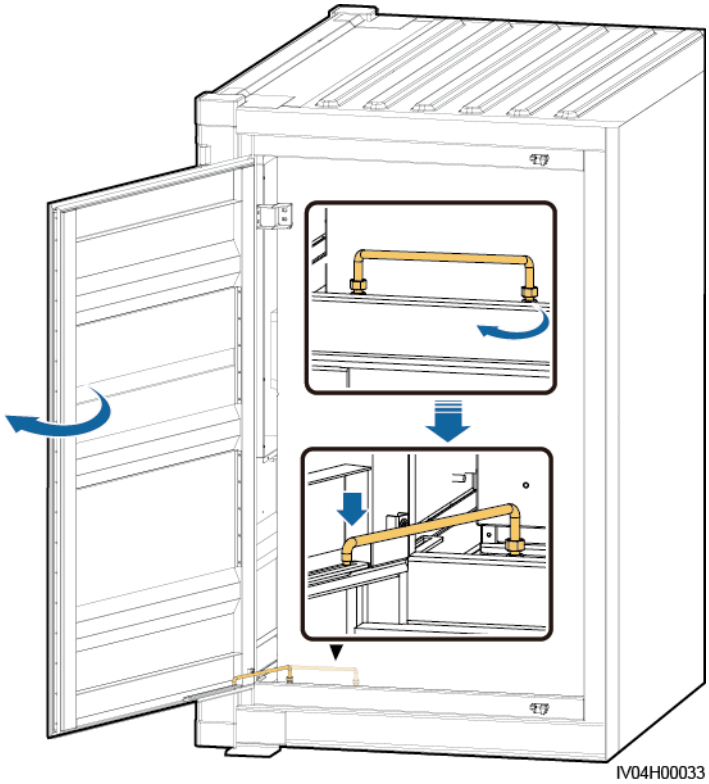

Step 2 Close the cabinet door.

Figure 5-2 Closing the cabinet door

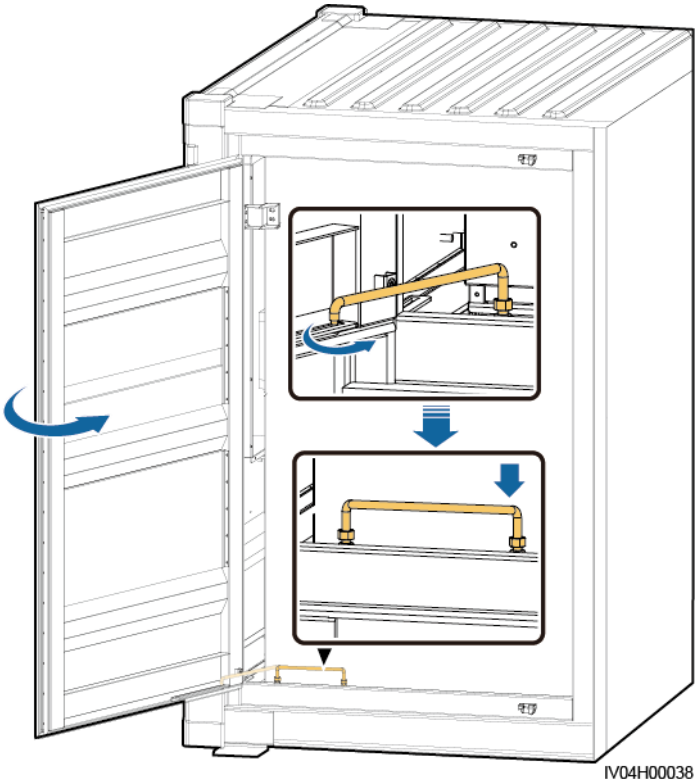

----End

Screen Door

Step 1 Open the screen door.

Figure 5-3 Opening a screen door

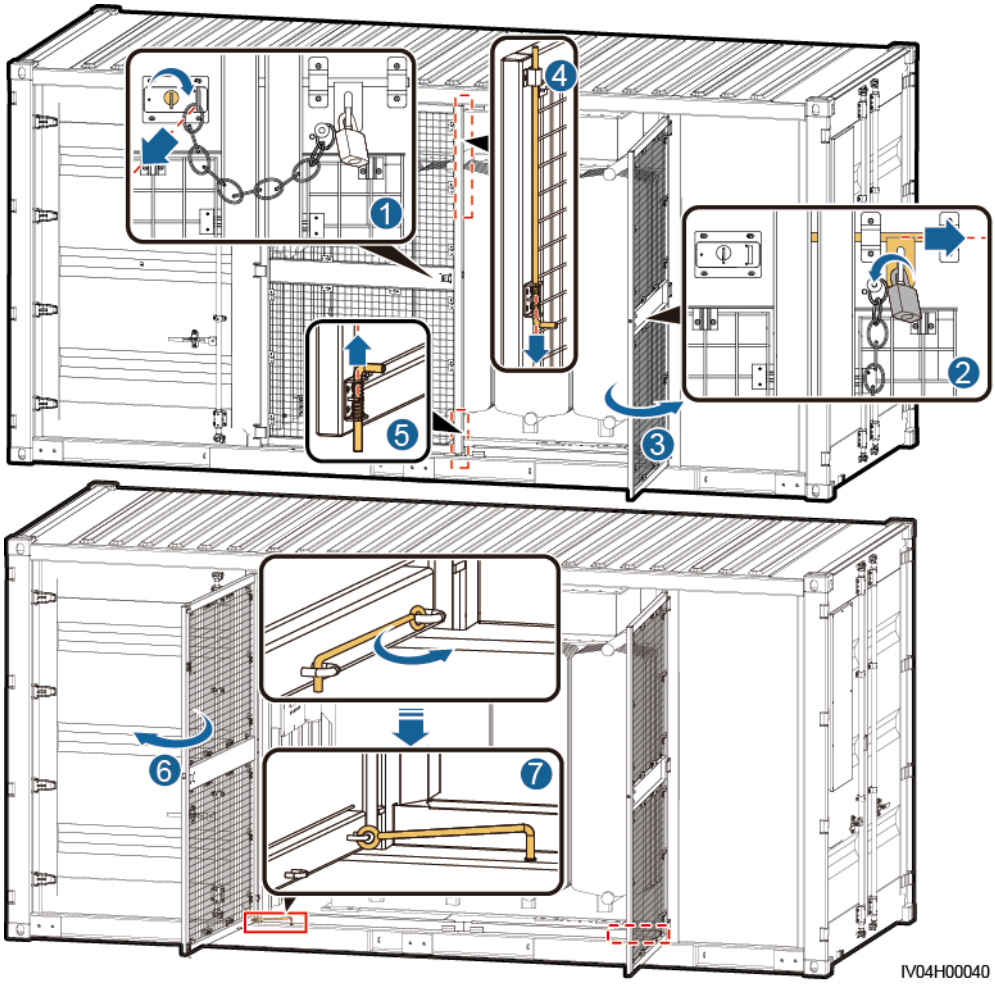

Step 2 Close the screen door.

Figure 5-4 Closing the screen door

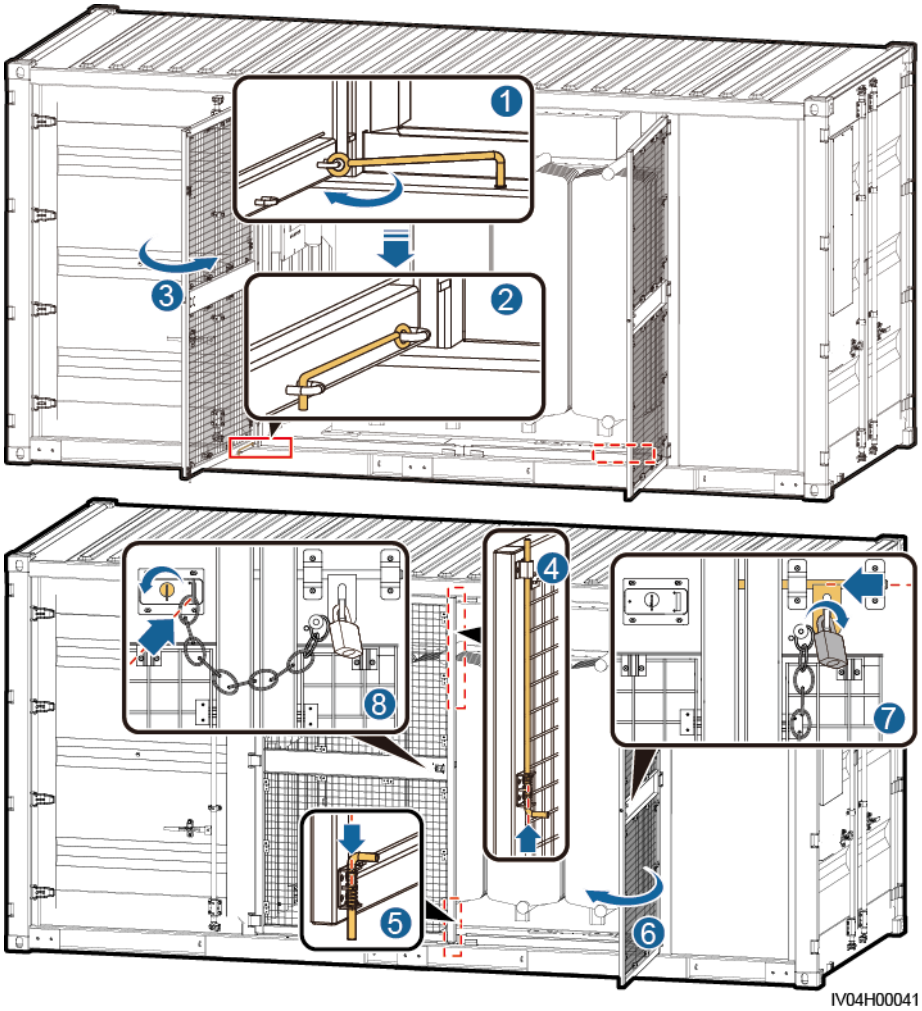

----End

5.2 Interlocking Between STSs with a CVC Ring Main Unit

NOTE

- K1 and K2 are equipped with a key ring and a blank label.
- Each STS and each switch have a unique number. The numbers are marked on the key label. If cabinet G1 does not have a switch, mark the door number of the cable room.
- Cabinet G1 of each STS connects to the power grid. Do not exchange the cables connected to cabinets G1 and G3. Otherwise, the interlocking between STSs will be in disorder.
- Put the interlock keys between STSs on key rings according to the cascading diagram. For the same MV cable, put the key of its grounding switch in cabinet G3 and that in cabinet G1 on the same key ring.
- For the STS that is farthest from the booster station, turn on the grounding switch in cabinet G3, remove the key, and deliver the key to the O&M personnel for proper storage.

Switch operation process: After turning on the grounding switch of the outgoing cable cabinet at the booster station, take out the key to the grounding switch of cabinet G1. After the key is returned, you can turn off the grounding switch of the outgoing cable cabinet.

Procedure

Step 1 Mechanical lock K1 is configured at the operation hole of the grounding switch in cabinet G1. After the K1 key is inserted, you can turn on or off the grounding switch. You can remove the K1 key only after the grounding switch is turned off.

Step 2 Mechanical lock (not a padlock) K2 is configured at the operation hole of the grounding switch in cabinet G3. After the K2 key is inserted, you can turn on or off the grounding switch. You can remove the K2 key only after the grounding switch is turned on.

Step 3 Based on the hand-in-hand connection diagram of the STSs obtained from the customer, put the K2 key of cabinet G3 in STS 1 and the K1 key of cabinet G1 in STS 2 on the same key ring. Mark the STS and switch numbers on the labels. The operations for STS 2 and STS 3 are similar. Turn on the grounding switch of cabinet G3 in the last STS. Remove the K2 key and hand it over to the O&M personnel.

Step 4 For the first STS closest to the booster station, the key to the grounding switch of cabinet G1 needs to be interlocked with the outgoing cable knife switch of the booster station. The interlocking logic is the same as that of STSs. If the knife switch does not have the interlocking function, interlocking can be performed with the disconnector. The operation hole of the disconnector should be equipped with a mechanical lock (not a padlock). After the key is inserted, the disconnector can be turned on and off. The key can be removed only after the disconnector is turned off.

Step 5 If the disconnector and the grounding switch do not have the interlocking function, turn off the grounding switch of cabinet G1 and remove the key. Then hand the key over to the O&M personnel for proper storage. According to the requirements, interlock the grounding switch of the booster station with that of the first STS to ensure operation safety.

Figure 5-5 Interlocking between STSs with a CVC ring main unit

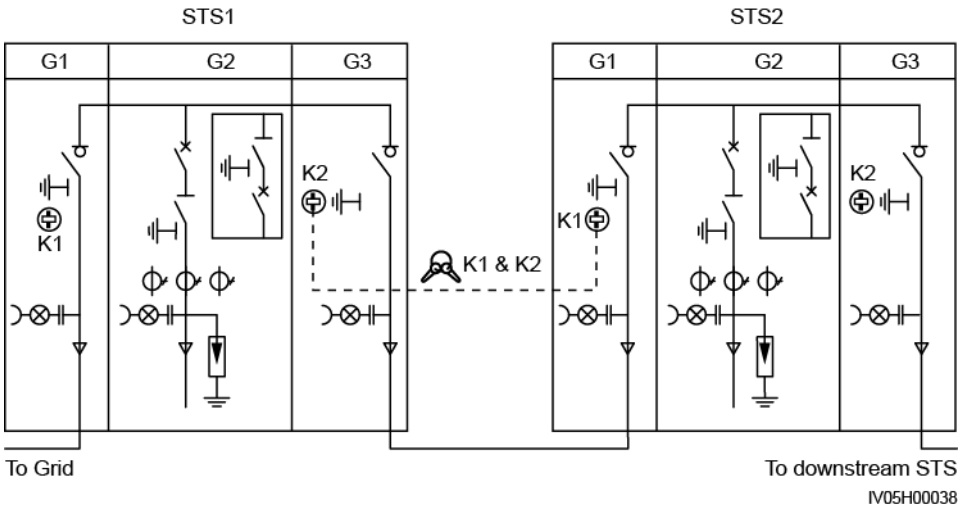

----End

5.3 Operating the Pressure Release Valve

The pressure release valve can be operated in two ways. Choose one depending on the situation.

5.3.1 Removing the Fuse Link of the Pressure Release Valve

Step 1 Remove the fuse link of the pressure release valve as shown in the following figure.

Figure 5-6 Removing the fuse link

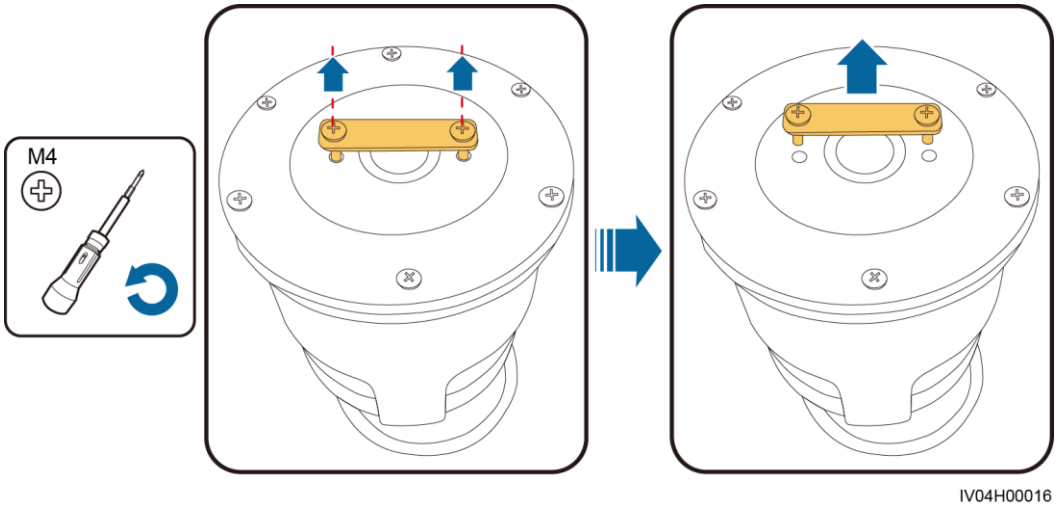

----End

5.3.2 Installing the Rainproof Canopy for the Pressure Release Valve

Step 1 Remove the cover from the pressure release valve.

Step 2 Install the rainproof canopy delivered with the STS on the pressure release valve.

 Copyright © Huawei Technologies Co., Ltd.

Figure 5-7 Installing the rainproof canopy for the pressure release valve

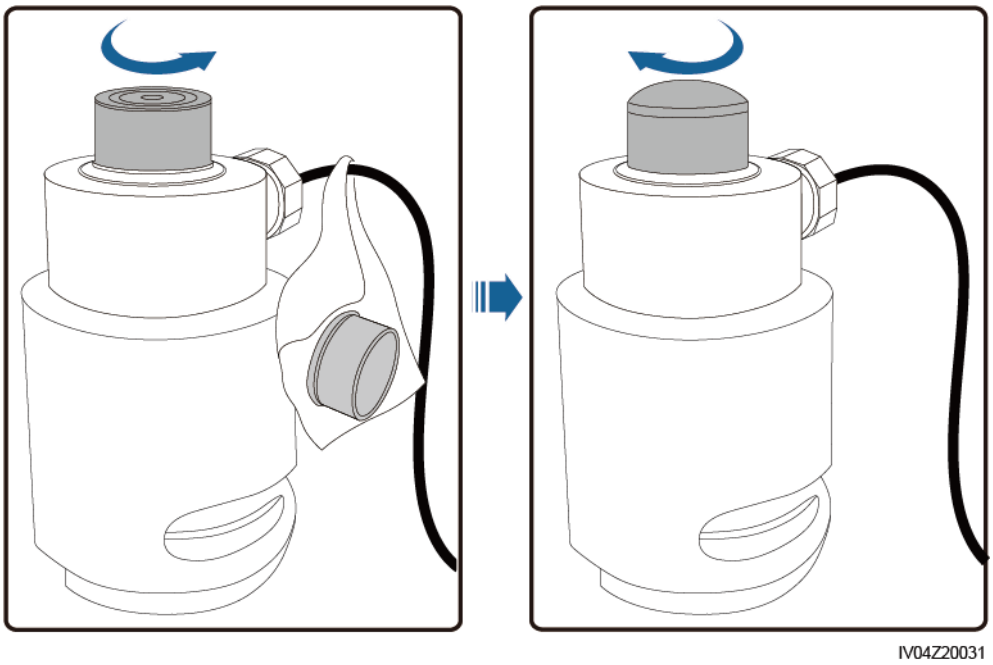

----End

5.4 Installing a Dehydrating Breather

A position for installing a common or maintenance-free dehydrating breather has been reserved in the STS. Install a proper dehydrating breather based on the required type.

Figure 5-8 Installation position of the dehydrating breathers

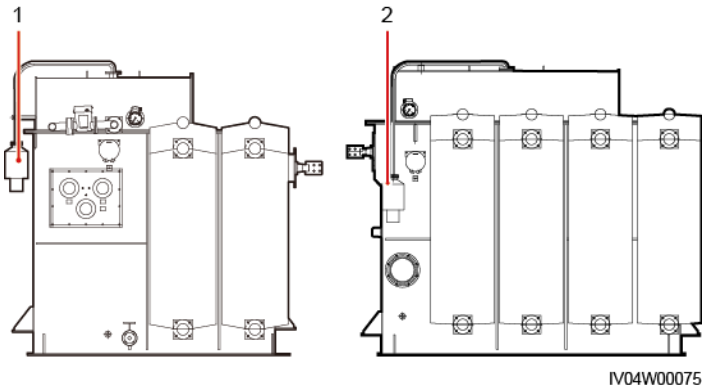

(1) Position of the dehydrating breather for STS-3000K-H1

(2) Position of the dehydrating breather for STS-6000K-H1

5.4.1 Installing a Common Dehydrating Breather

Step 1 Remove the flange cover from the position to install the dehydrating breather.

Step 2 Secure the dehydrating breather.

NOTICE

There is a sealing washer between the flange cover and dehydrating breather. When tightening the bolt, ensure that the sealing washer is 1/4 compressed in height.

Figure 5-9 Securing the dehydrating breather

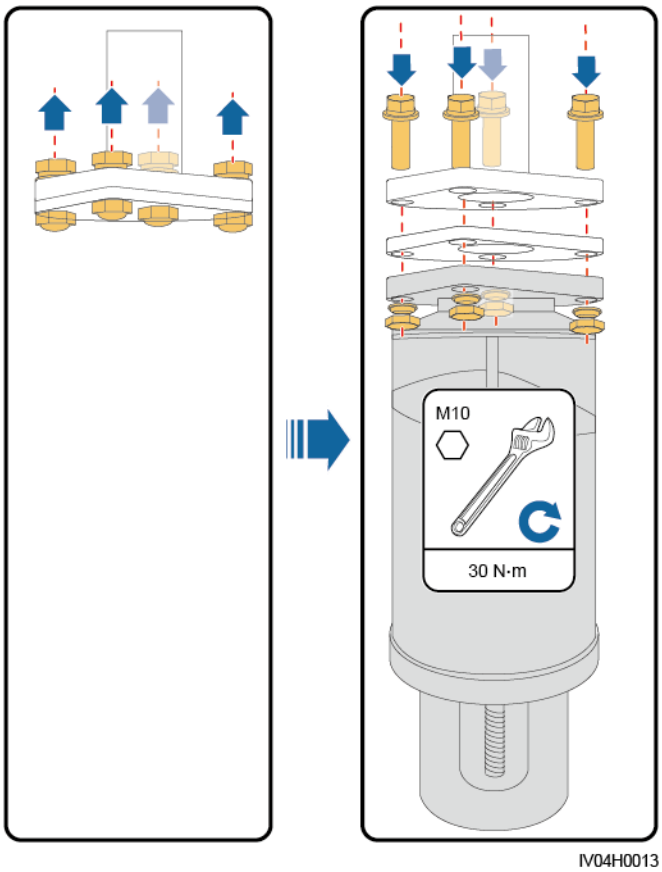

Step 3 Remove the end cover from the dehydrating breather.

Step 4 Add transformer oil to the cover of the dehydrating breather and reinstall the cover.

Figure 5-10 Securing the end cover

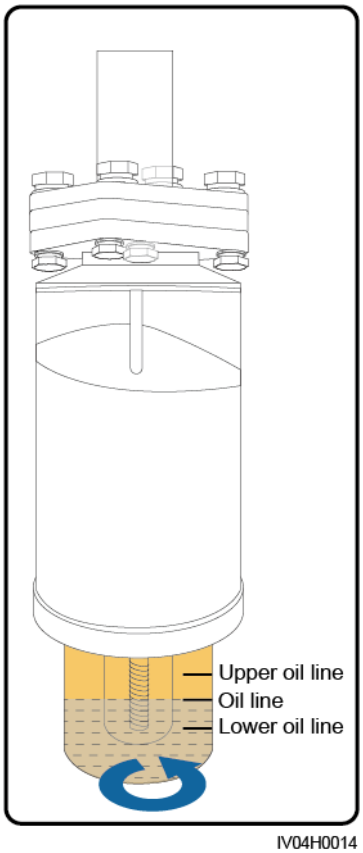

----End

5.4.2 Installing a Maintenance-Free Dehydrating Breather

Step 1 Remove the flange cover from the dehydrating breather.

Step 2 Secure the dehydrating breather using the bolts and nuts delivered.

Figure 5-11 Installing a dehydrating breather

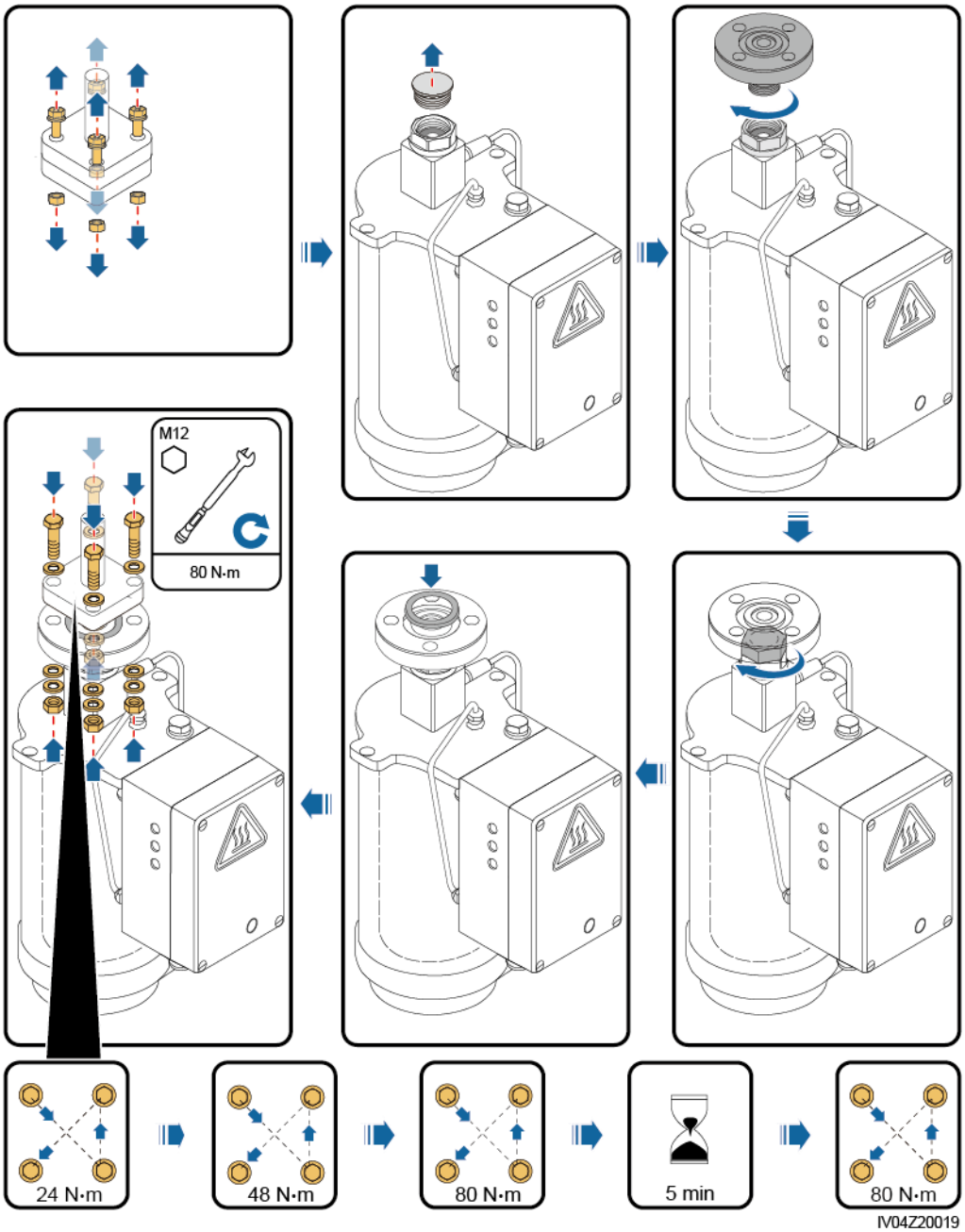

Step 3 Adjust the position of the dehydrating breather to ensure that the maintenance compartment door faces the operator.

Step 4 Tighten the locking nut of the dehydrating breather.

Step 5 Remove the dustproof cover from the bottom of the dehydrating breather.

Figure 5-12 Adjusting the dehydrating breather

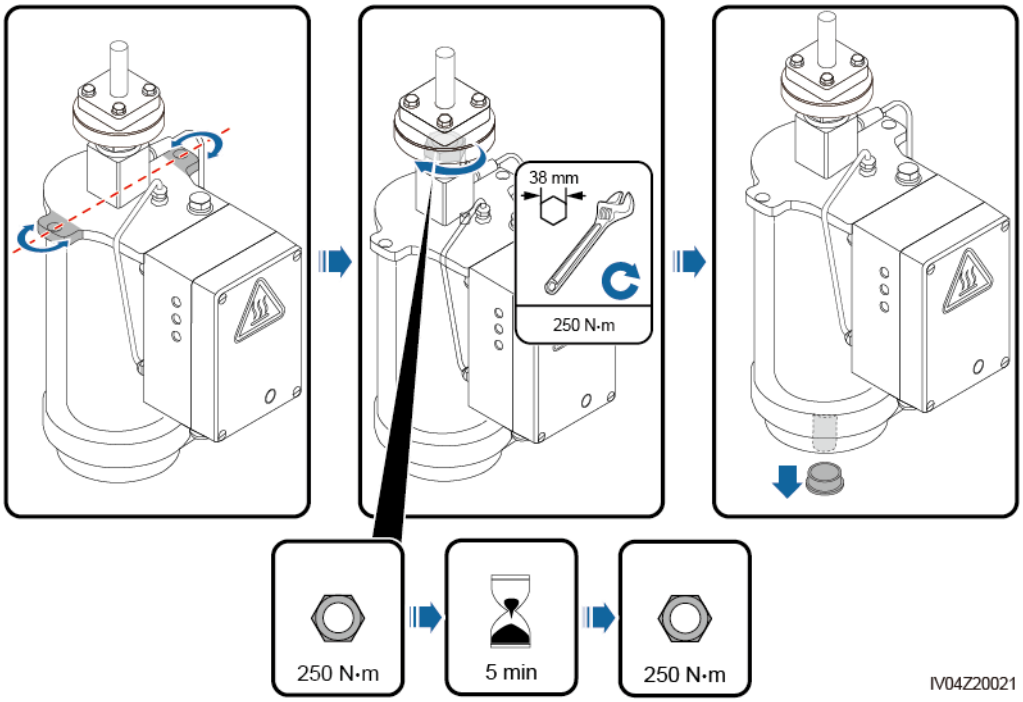

Step 6 Install a protective earthing (PE) cable for the dehydrating breather. Apply silica gel or paint on the ground terminal to protect it against corrosion.

Figure 5-13 Installing a PE cable

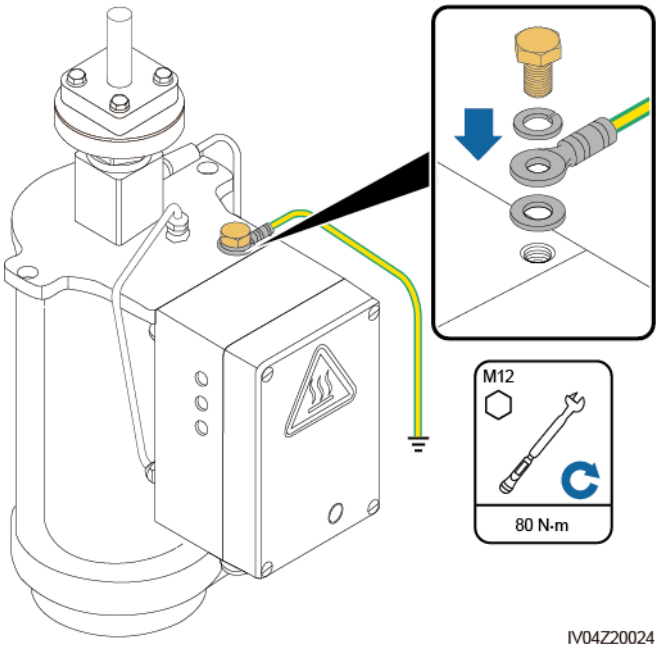

Step 7 Open the maintenance compartment door of the dehydrating breather.

Step 8 Install cables in the maintenance compartment of the dehydrating breather.

Step 9 Ensure that the PE cable is securely connected to the maintenance compartment door of the dehydrating breather, and close the maintenance compartment door.

NOTICE

Avoid damaging the PE cable when closing the maintenance compartment door.

Figure 5-14 Installing cables in the maintenance compartment

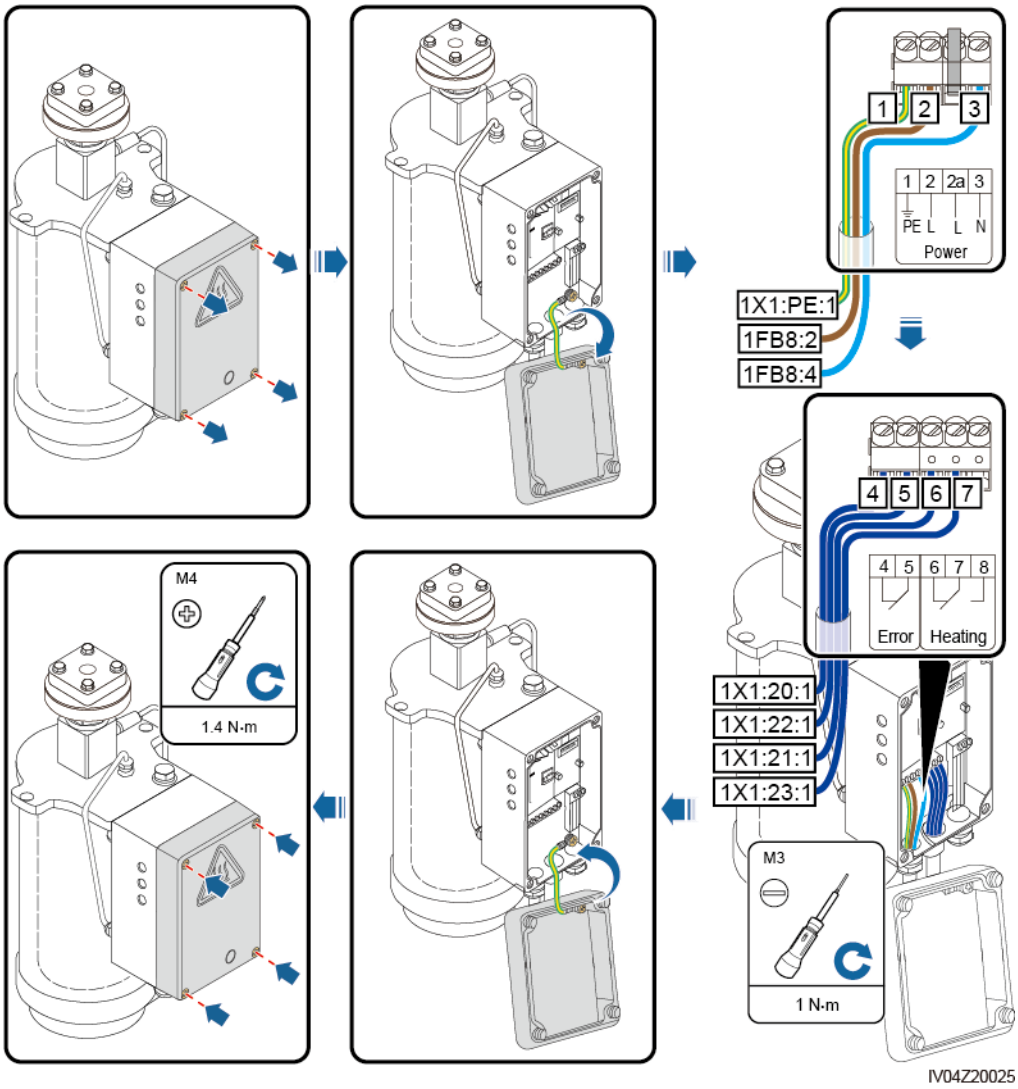

----End

5.5 Operating an Oil Surface Thermometer

Step 1 Rotate the cover counterclockwise to remove the glass cover.

Step 2 Take out the foam.

Step 3 Rotate the cover clockwise to reinstall the glass cover. Ensure that the white pointer is on the left and the red pointer is on the right.

Step 4 Rotate the knob to put the red and white pointers together.

Figure 5-15 Operating an oil surface thermometer

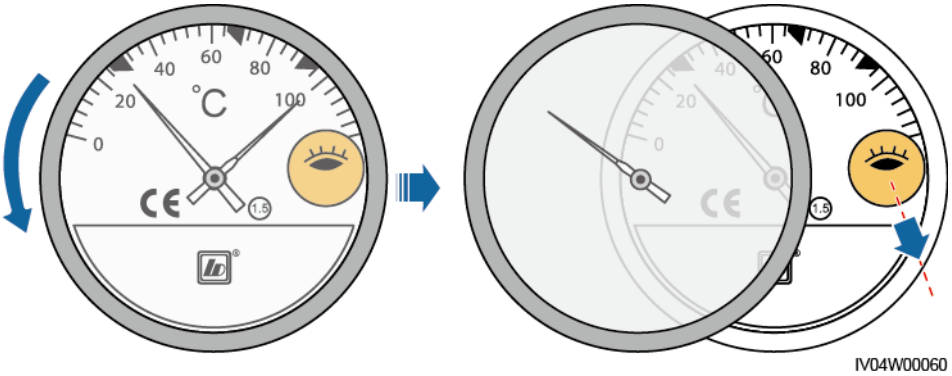

----End

6 STS Insulation Tests

The STS insulation tests cover the transformer MV side, ring main unit, transformer LV side, bus on the LV side, and auxiliary loop. For details, see the *STS-(3000K, 6000K)-H1 Smart Transformer Station User Manual*.

NOTE

Perform the insulation tests before connecting incoming cables and sealing cable holes.

 Copyright © Huawei Technologies Co., Ltd.

7 Connecting Cables

Precautions

DANGER

Before connecting cables, ensure that the upstream and downstream switches of the STS are turned off, and that the STS is not energized. Otherwise, the high voltage of the STS may result in electric shocks.

WARNING

- The device damage caused by incorrect cable connections is beyond the warranty scope.
- Only qualified electricians can perform operations about electrical connections.
- Wear proper PPE at all time when connecting cables.
- Before connecting cables to ports, leave enough slack to reduce the tension on the cables and prevent poor cable connection.

NOTE

The cable colors shown in the electrical connection diagrams provided in this chapter are for reference only. Select cables in accordance with local cable specifications (green-and-yellow cables are only used for protective earthing).

Wiring Requirements

- Cables should be arranged neatly and the cable insulation layer should be intact.
- The cable connectors prepared onsite must be secure, reliable, neat, and comply with relevant regulations.
- Power cables, ground cables, and signal cables should be securely and reliably connected in conformity with wiring regulations.
- Power cables should be routed according to the requirements for routing strong-current and weak-current cables and in compliance with the cable routing plan. Power cables and signal cables should be bound separately.
- Both ends of cables should be marked with a label that is easy to understand and faces outward.

 Copyright © Huawei Technologies Co., Ltd.

- Cable ties should be neatly cut without sharp burs, evenly distributed, bound to a proper strength, and fastened towards the same direction.
- The bundled cables should be close to each other, straight, and neat.
- The redundant cables should be coiled neatly for identification.
- Cables should not be overly bent to avoid damage the cable cores.
- Cables should not be tied where they bend.

7.1 Preparing Cables

NOTICE

- Cables should have sufficient current-carrying capacity and should not be overloaded.
- Cables with the same functions should have the same specifications and type.

Figure 7-1 Cable connections (configure the components in the dotted box as required)

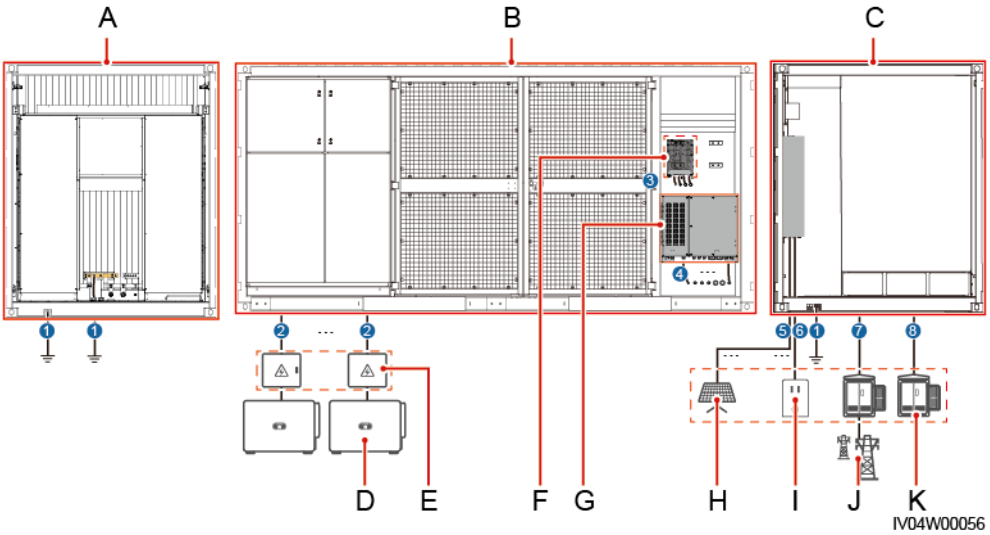

(A) Side view of the STS LV cabinet	(B) Front view of the STS	(C) Side view of the STS MV room
(D) Solar inverter	(E) AC switch box	(F) UPS
(G) Smart array controller (SACU)	(H) Support tracking system	(I) Power-consuming device
(J) Power grid	(K) STS	

 Copyright © Huawei Technologies Co., Ltd.

Table 7-1 Cables

No.	Cable	Type	Cross-sectional Area	Outer Diameter	Source
1	PE cable	Single-core outdoor copper cable and M12 OT/DT terminals	50–240 mm^2	10–32 mm	Prepared by the customer
2	AC input power cable[a]	Single-core or three-core outdoor copper/copper-clad aluminum/aluminum alloy cable and M12 OT/DT terminals	50–240 mm^2	16–72 mm	Prepared by the customer
3	UPS cable bundle	N/A	N/A	N/A	Delivered with the product
4	SACU cable bundle	N/A	N/A	N/A	Delivered with the product
5	(Optional) Tracking system power cable	Three-core or four-core outdoor copper cable	2.5–16 mm^2	10–32 mm	Prepared by the customer
6	(Optional) Site auxiliary power supply cable	Two-core or three-core outdoor copper cable	2.5–10 mm^2	6–20 mm	Prepared by the customer
7	Cabinet G1 cable	Single-core or three-core outdoor copper/copper-clad aluminum/aluminum alloy cable and separable shielded cable connectors	70–300 mm^2	Single-core: 30–52 mm Three-core: 30–95 mm	Prepared by the customer
8	Cabinet G3 cable				Prepared by the customer

Note a: The AC input power cable can connect to a 300 mm^2 or 400 mm^2 single-core cable. The restrictions are as follows:

- Outer diameter of a single-core cable ≤ 35 mm
- Dimensions of the wiring terminal: width ≤ 43 mm; length ≤ 136.5 mm; outer diameter of the crimping tube ≤ 37 mm

7.2 Connecting a PE Cable for the STS

Grounding Requirements

- The grounding should comply with the local electrical safety regulations.

 Copyright © Huawei Technologies Co., Ltd.

- Do not connect devices such as fuses and switches to a PE cable.
- Connect the PE cable to the chassis shell or the ground point of the main ground bar in the LV room.

Procedure

Step 1 Connect a PE cable.

Figure 7-2 Connecting a PE cable to the chassis shell

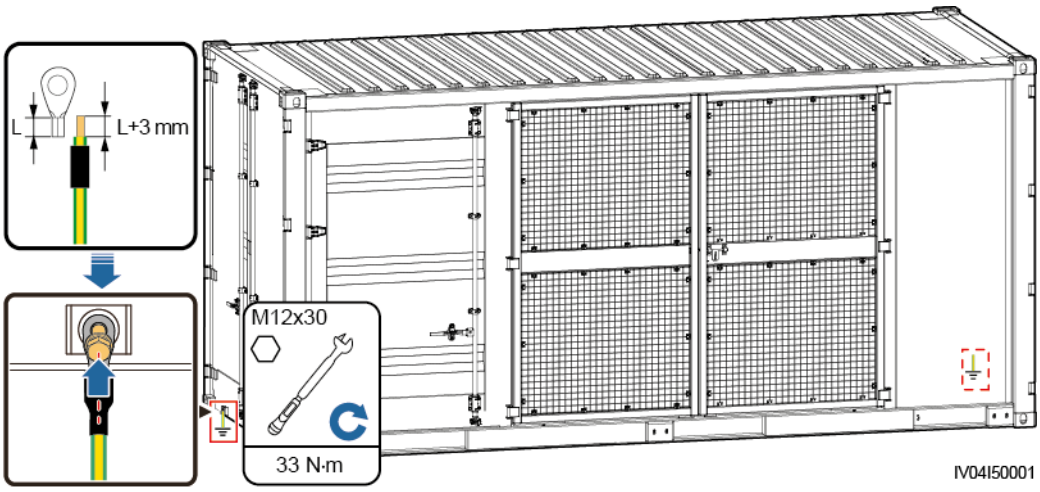

Figure 7-3 Connecting a PE cable to the main ground bar in the LV room

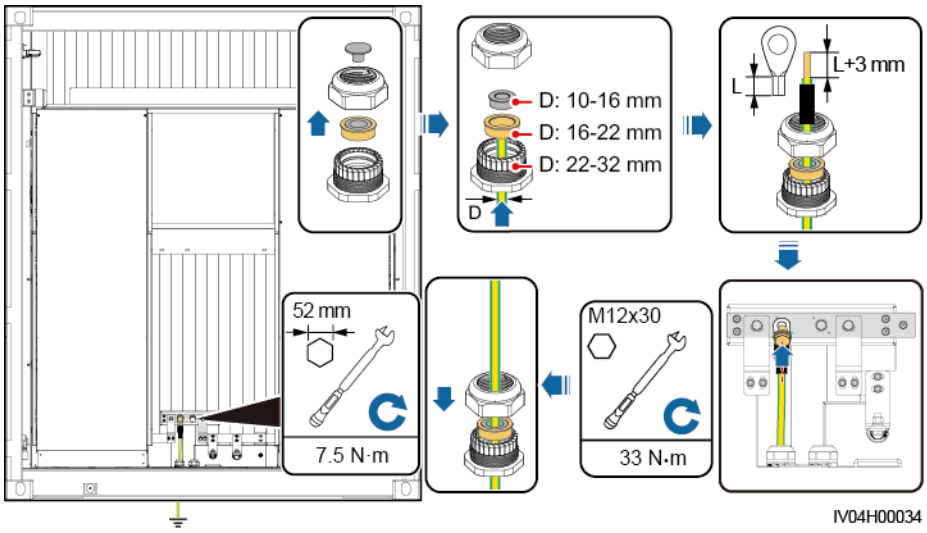

----End

Follow-up Procedure

To enhance the corrosion resistance of a ground terminal, apply silica gel or paint on it after connecting the PE cable.

7.3 Connecting an AC Input Power Cable

Requirements for OT/DT Terminals

- If a copper cable is used, use copper wiring terminals.
- If a copper-clad aluminum cable is used, use copper wiring terminals.
- If an aluminum alloy cable is used, use copper-to-aluminum wiring terminals, or aluminum wiring terminals along with copper-to-aluminum washers.

NOTICE

- Do not connect aluminum wiring terminals to the AC terminal block. Otherwise electrochemical corrosion may occur, affecting the reliability of cable connections.
- Comply with the IEC 61238-1 requirements when using copper-to-aluminum wiring terminals, or aluminum wiring terminals along with copper-to-aluminum washers.
- Do not mix up the aluminum and copper sides of the copper-to-aluminum washers. Ensure that the aluminum side of the washer contacts the aluminum wiring terminal, and the copper side contacts the AC terminal block.

Figure 7-4 Requirements for OT/DT terminals

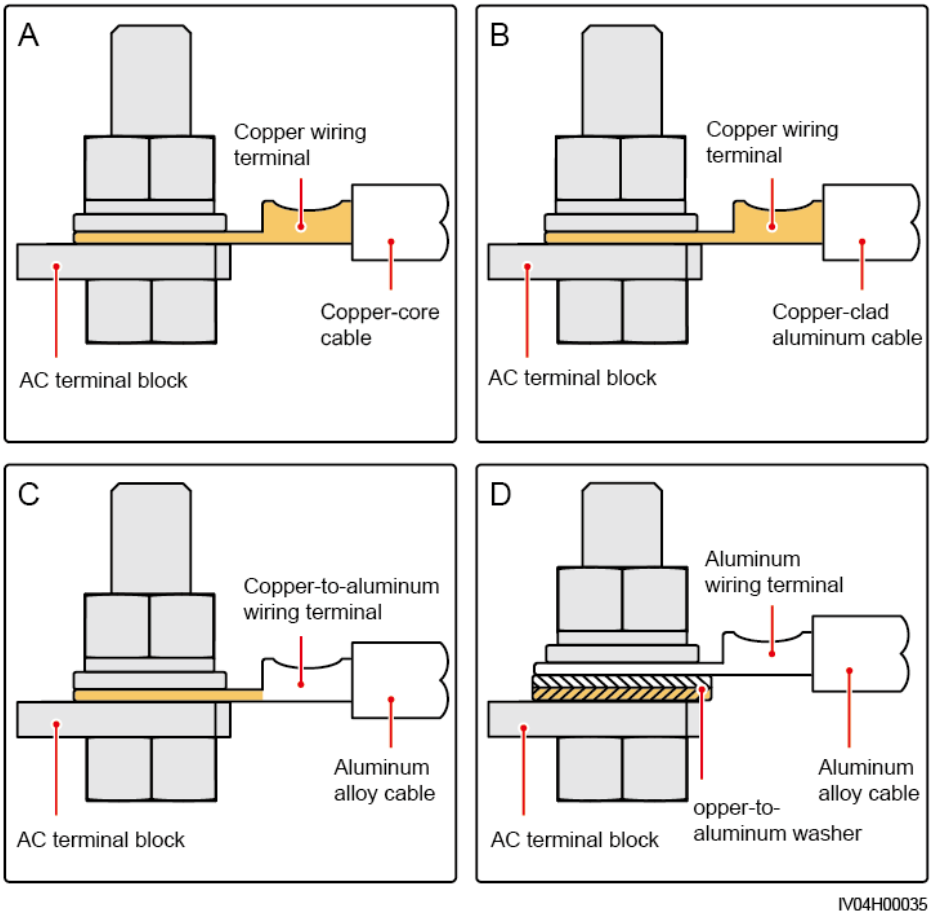

Figure 7-5 Dimensions of the AC terminal block

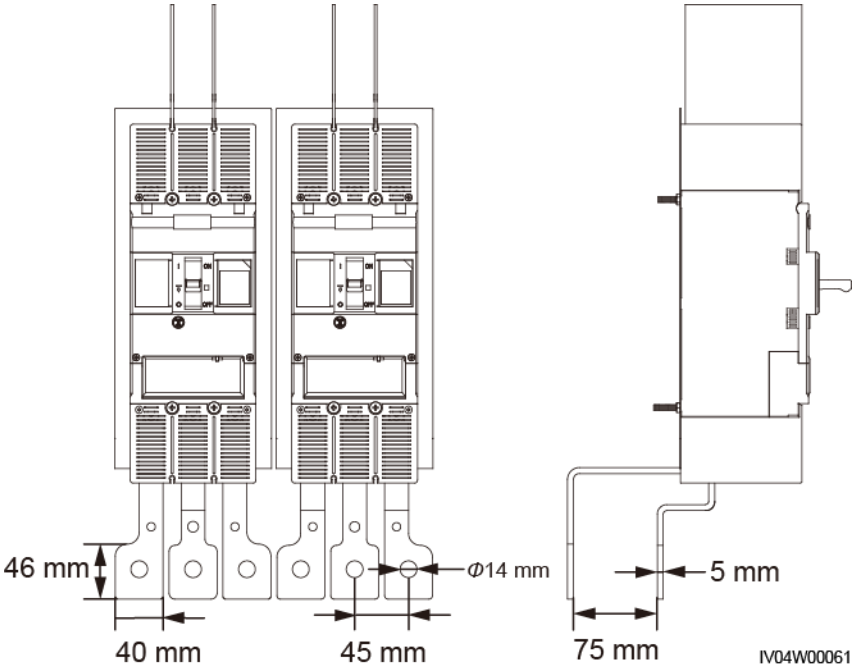

Procedure

Step 1 Connect an AC input power cable.

NOTICE

- The screw assembly whose model is subject to the delivery should be tightened according to the corresponding standard torque.
- Partially tighten the nut of the AC input power cable using a torque of 5 N·m when securing the cable.
- The wiring terminal must be installed with heat shrink tubing at the crimping area of the cable conductor to ensure that the electrical clearance between the conductors is greater than 20 mm.
- Lay out the AC input power cable according to the design, route the cable to the corresponding wiring position on the corresponding switch, and label the cable.

Figure 7-6 Connecting an AC input power cable

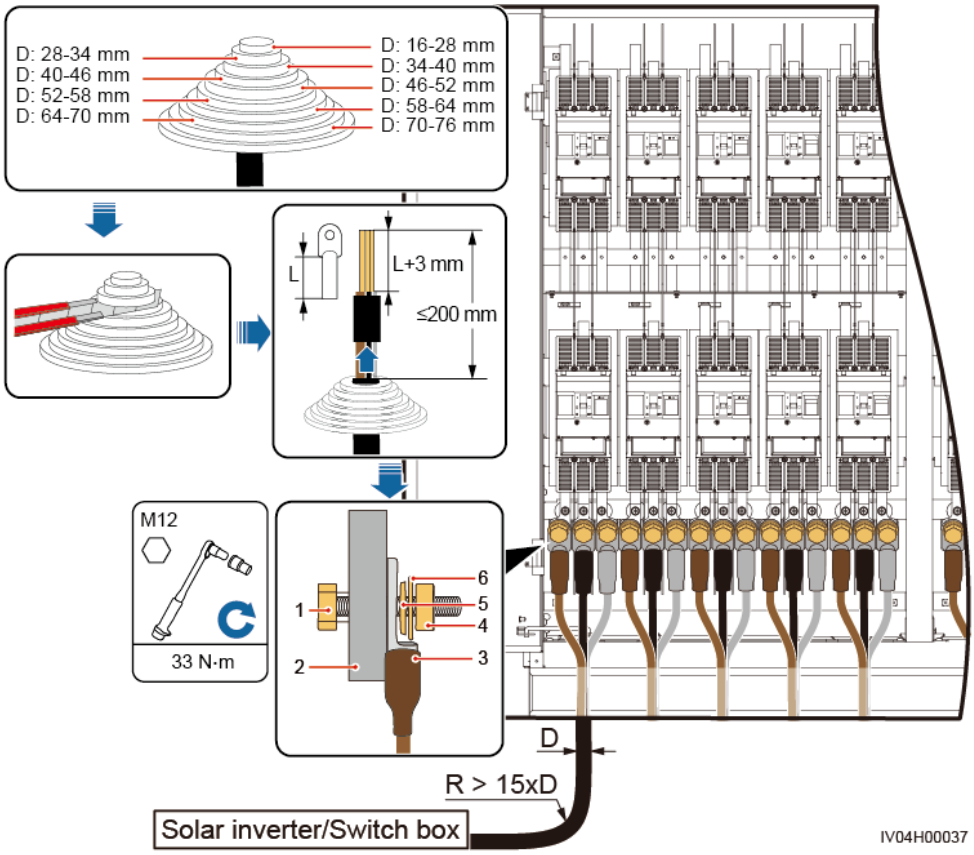

(1) Screw assembly	(2) Copper bar	(3) Wiring terminal
(4) Nut	(5) Flat washer	(6) Spring washer

Step 2 Use firestop putty to seal the cable hole at the bottom.

----End

7.4 Installing a Lightning Arrester for the Ring Main Unit

WARNING

- The lightning arrester of the ring main unit must be installed after the insulation test is complete. Otherwise, the voltage during the insulation test will damage the lightning arrester.
- The installation of the lightning arrester has high requirements for the environment. Therefore, the lightning arrester must be installed in a sunny, dust-free, and wind-free environment.
- During the installation, clean the insulation surface, insulation plug, and rear tee connector surface of the lightning arrester using a clean cloth and apply silicone grease evenly.
- The lightning arrester of the ring main unit is delivered with the cabinet. For details, see the installation guide provided by the manufacturer.

Install the lightning arrester in cabinet G2 of the ring main unit in the MV room.

Figure 7-7 Installation position of the lightning arrester

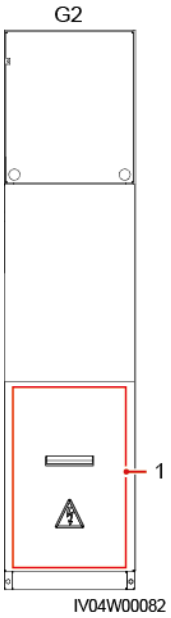

(1) Position of the lightning arrester

Step 1 Adjust the height of the support for the lightning arrester based on the height of the lightning arrester.

Figure 7-8 Adjusting the height of the support for the lightning arrester

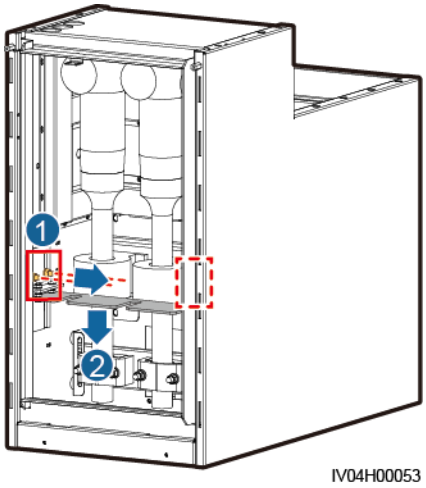

Step 2 Install a lightning arrester.

Figure 7-9 Installing a lightning arrester

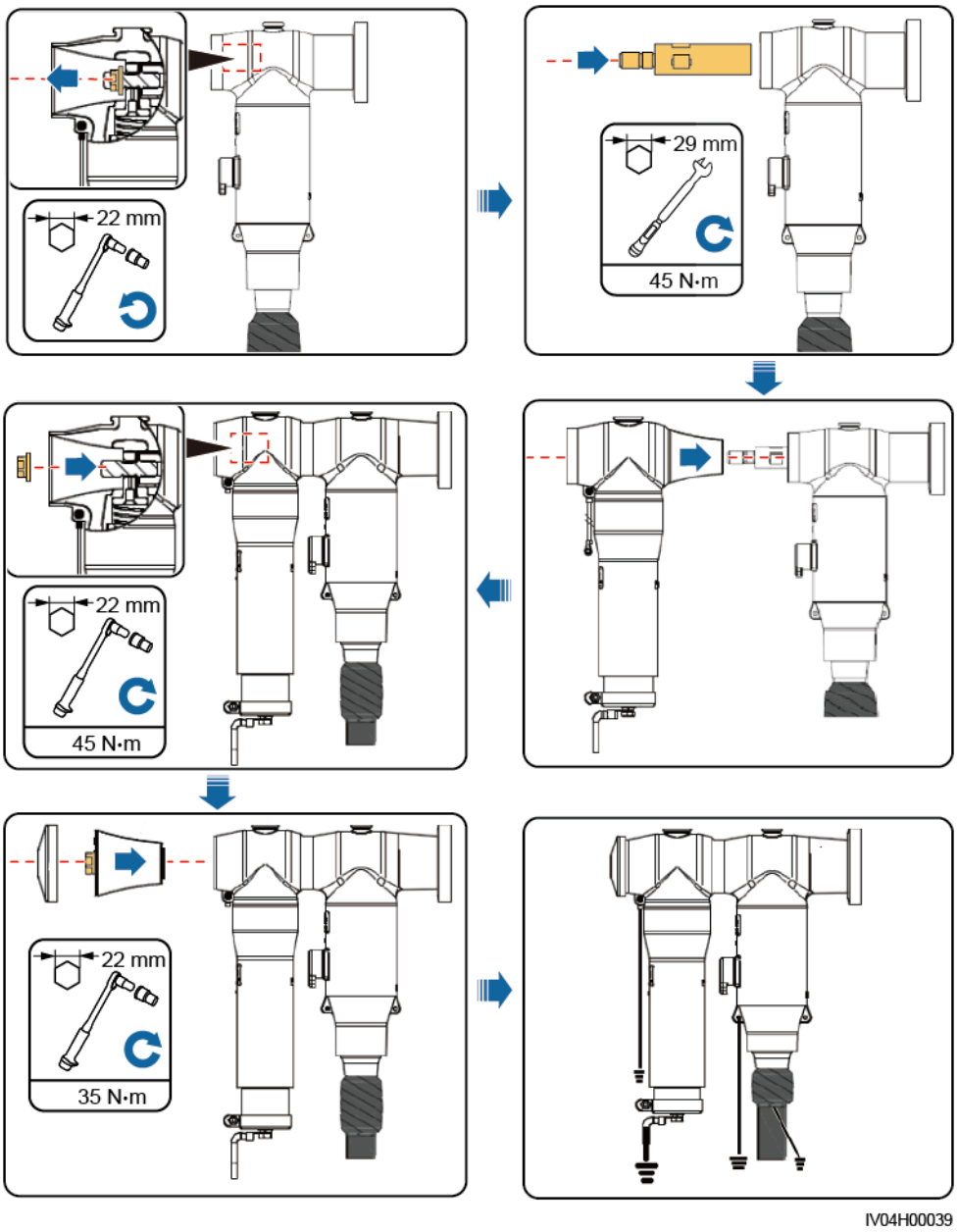

Step 3 Secure the support for the lightning arrester.

Figure 7-10 Securing the support for the lightning arrester

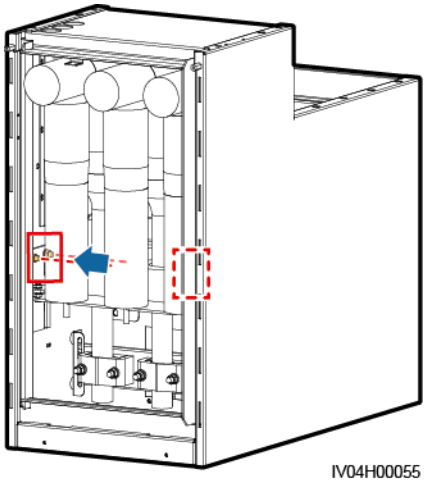

----End

7.5 Connecting an AC Output Power Cable

NOTICE

- The door of the power cable room of the ring main unit is interlocked with the grounding switch. The door can be opened only when the grounding switch is turned on.
- When connecting the incoming cables, ensure that the grounding switch of the upstream outgoing cable cabinet is turned on. After connecting cables, ensure that the grounding switch of cabinet G1 in the ring main unit of the STS is turned off.
- Before turning on the grounding switch of cabinet G1, turn off the switch in the upstream cabinet G3.
- If multiple STSs are cascaded, cabinet G3 of the last STS should be installed with insulation plugs by the Engineering, Procurement, Construction (EPC) party.
- Route cables to corresponding positions according to the design and label the cables.
- If the foundation is too high to connect the cables, the customer needs to add a construction platform to facilitate cable connections.

Procedure

Step 1 Cut a cable inlet according to the cross-sectional area of the cable.

Step 2 Prepare terminals and secure them by referring to the installation guide to the split-type shielded cable connector.

 Copyright © Huawei Technologies Co., Ltd.

Figure 7-11 Connecting an AC output power cable (a single STS)

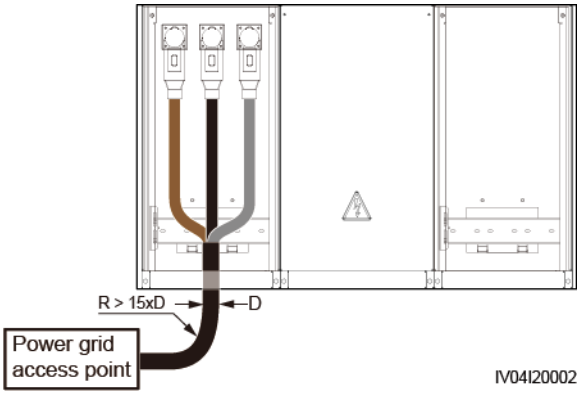

Figure 7-12 Connecting AC output power cables (multiple STSs cascaded)

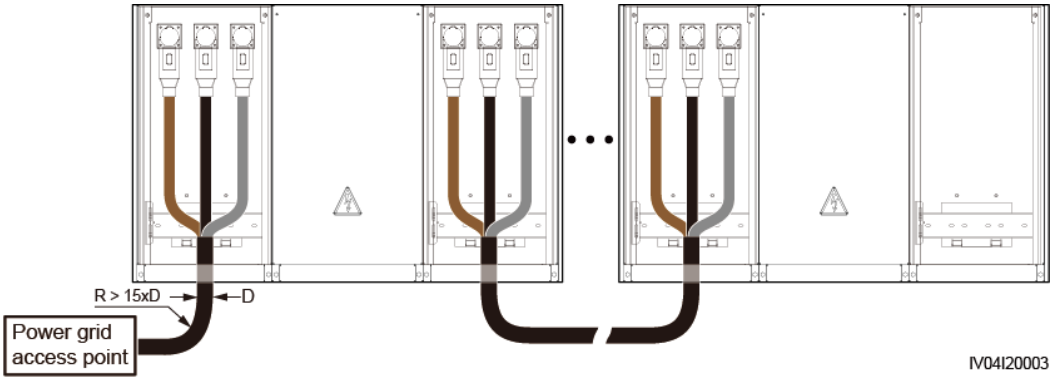

NOTE

The cable room of the load switch cabinet supports the access of two rows of cables. The actual situation prevails.

Figure 7-13 Access of two rows of cables

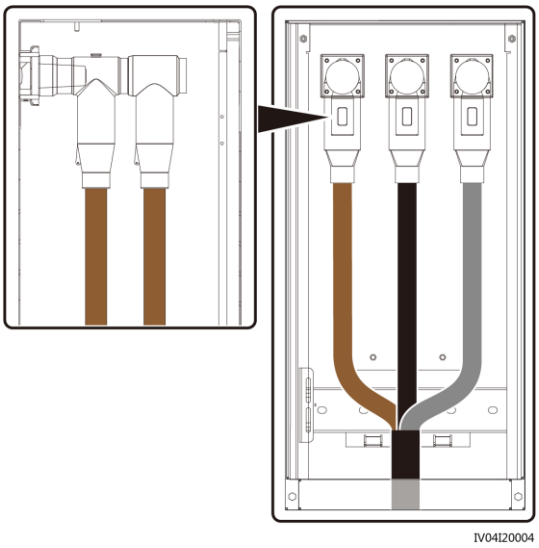

Step 3 Fill the rubber insulation layer removed when preparing the cables between the cables and the cable clips to ensure that the cables are securely connected.

Figure 7-14 Securing cables

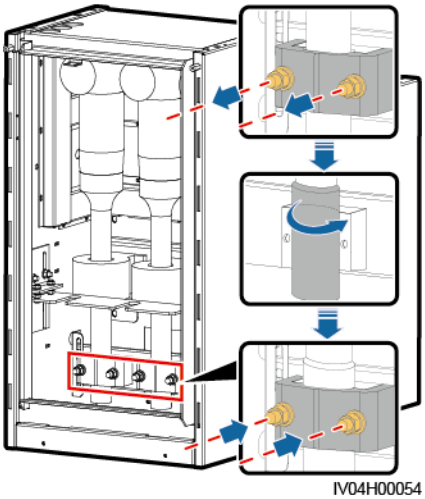

NOTE

If the cables are not securely connected, the ring main unit may be damaged, causing gas leakage.

Step 4 Seal the bottom cable hole using firestop putty, clear the cable room sundries, and close the door.

----End

7.6 Connecting Cables to an SACU

NOTE

- The installation position of an SACU is reserved outside the MV room.
- The cables of the SACU have been reserved on auxiliary transformer side in the MV room before delivery.

Table 7-2 Cable labels for connecting the STS-3000K-H1 to the SACU

Cable Type	STS End (Preinstalled)	SACU End
PE cable	600-PE:4-SACU-PE	600-SACU-PE-PE:4
Three-phase AC power cable	589-3X1:1:2-SACU:L1-1 590-3X1:2:2-SACU:L2-1 591-3X1:3:2-SACU:L3-1 592-3X1:4:2-SACU:FE01	589-SACU:L1-1-3X1:1:2 590-SACU:L2-1-3X1:2:2 591-SACU:L3-1-3X1:3:2 592-SACU:FE01-3X1:4:2
RS485 communications cable	594-3X1:9:2-SACU:9 595-3X1:10:2-SACU:10 596-3X1:PE:2-SACU:PE	594-SACU:9-3X1:9:2 595-SACU:10-3X1:10:2 596-SACU:PE-3X1:PE:2
Single-phase AC power cable	525-3FB3:2-SACU:L 527-3FB3:4-SACU:N(L) 593-3X1:PE:1-W5:SH	525-SACU:L-3FB3:2 527-SACU:N(L)-3FB3:4 593-W5:SH-3X1:PE:1

Table 7-3 Cable labels for connecting the STS-6000K-H1 to the SACU

Cable Type	STS End (Preinstalled)	SACU End
PE cable	848-PE:4-SACU-PE	848-SACU-PE-PE:4
Three-phase AC power cable	Route 1: 830-3X1:1:2-SACU:L1-1 831-3X1:2:2-SACU:L2-1 832-3X1:3:2-SACU:L3-1 833-3X1:4:2-SACU:FE01 Route 2: 834-3X1:5:2-SACU:L1-2 835-3X1:6:2-SACU:L2-2 836-3X1:7:2-SACU:L3-2 837-3X1:8:2-SACU:FE02	Route 1: 830-SACU:L1-1-3X1:1:2 831-SACU:L2-1-3X1:2:2 832-SACU:L3-1-3X1:3:2 833-SACU:FE01-3X1:4:2 Route 2: 834-SACU:L1-2-3X1:5:2 835-SACU:L2-2-3X1:6:2 836-SACU:L3-2-3X1:7:2 837-SACU:FE02-3X1:8:2
RS485 communications cable	839-3X1:9:2-SACU:9 840-3X1:10:2-SACU:10 841-3X1:PE:2-SACU:PE	839-SACU:9-3X1:9:2 840-SACU:10-3X1:10:2 841-SACU:PE-3X1:PE:2
Single-phase AC power	766-3FB3:2-SACU:L	766-SACU:L-3FB3:2

 Copyright © Huawei Technologies Co., Ltd.

Cable Type	STS End (Preinstalled)	SACU End
cable	768-3FB3:4-SACU:N(L) 838-3X1:PE:1-W5:SH	768-SACU:N(L)-3FB3:4 838-W5:SH-3X1:PE:1

Step 1 Install an SACU.

Figure 7-15 Installing an SACU

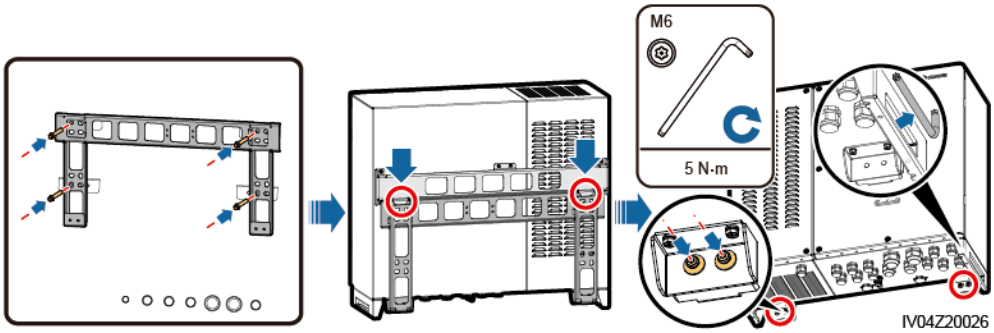

Step 2 Connect a PE cable.

Figure 7-16 Connecting a PE cable

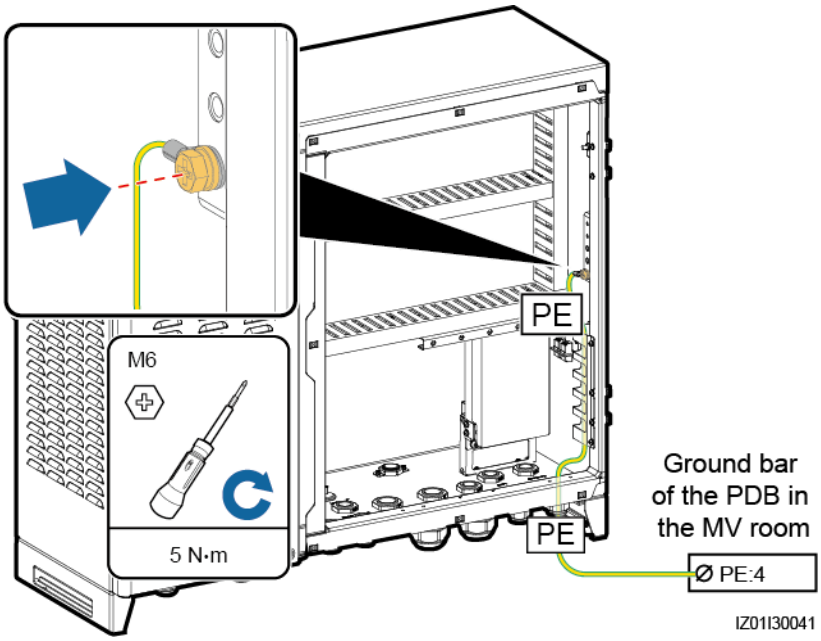

Step 3 Connect three-phase AC power cables.

WARNING

- For the SACU that houses one potential induced degradation (PID) module, connect the three-phase AC power cable to the FU01 switch, and the functional earthing (FE) cable to FE01 on the FE bar.
- For the SACU that houses two PID modules, connect the three-phase AC power cable of the first route to the FU01 switch, and the corresponding FE cable to FE01 on the FE bar. Connect the three-phase AC power cable of the second route to the FU02 switch, and the corresponding FE cable to FE02 on the FE bar.
- Do not reversely connect the cables to FE01 and FE02.
- This document describes how to connect three-phase AC power cables for the SACU that houses two PID modules. For details about how to connect a three-phase AC power cable for the SACU that houses one PID module, refer to the way of connecting the first route of the three-phase AC power cable.

Figure 7-17 Connecting three-phase AC power cables

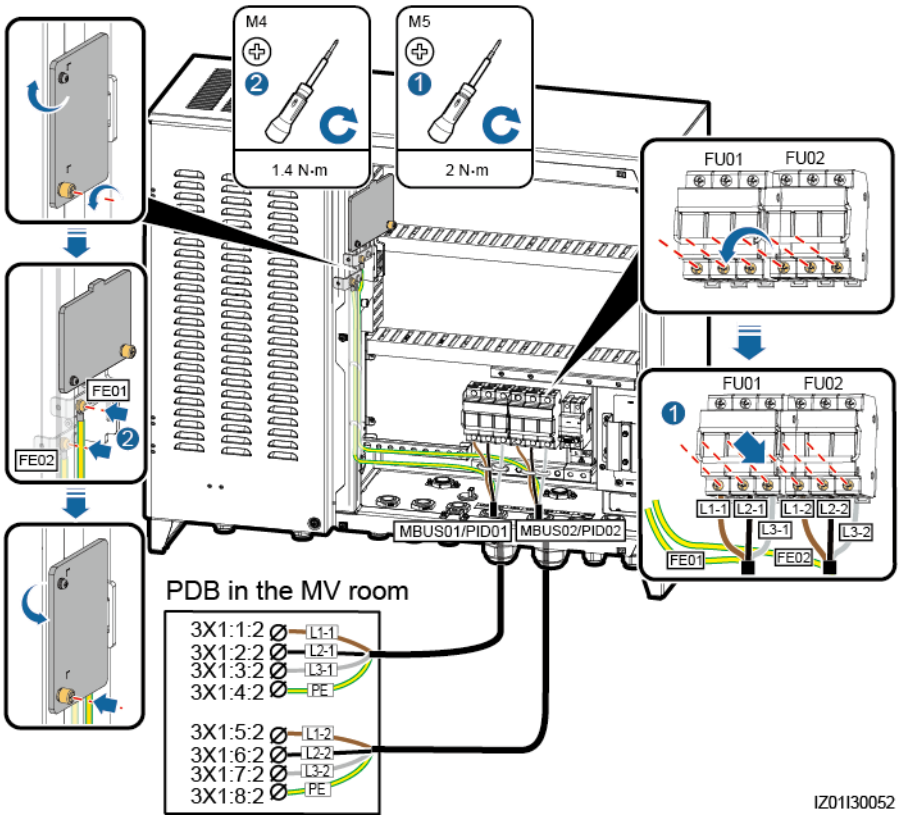

Step 4 Connect an RS485 communications cable.

Figure 7-18 Connecting an RS485 communications cable

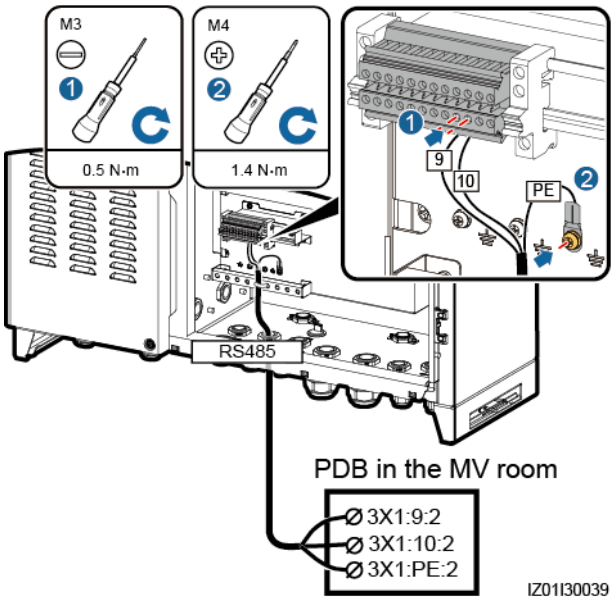

Step 5 Connect a single-phase AC power cable. Insulate the unused cable terminals and bind them in the cable holder.

Figure 7-19 Connecting a single-phase AC power cable

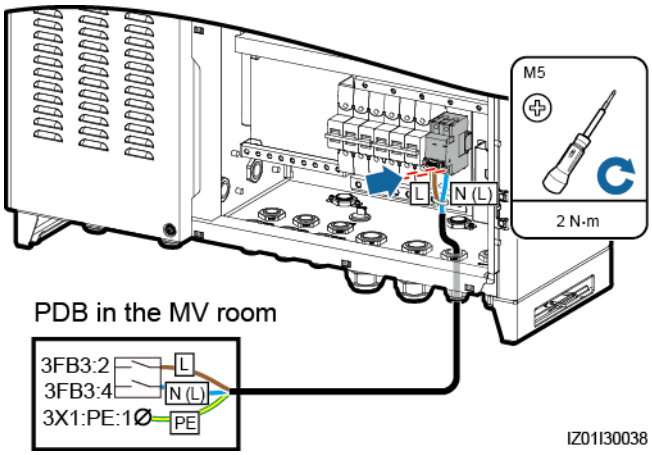

Step 6 Use firestop putty to seal the cable hole in the container.

----End

7.7 (Optional) Connecting Cables to the UPS

You have obtained the UPS and its auxiliary materials. Check that the quantity and model of the following materials are correct based on the packing list.

Table 7-4 Material list

No.	Material	Code
1	Power supply unit (PSU)	02311LLC
2	Energy storage module (ESM)	01073568
3	Ground cable of the PSU (16 mm^2)	25030429
4	AC input/output power cable	25030386
5	Signal cable between the UPS and the SACU	04080342
6	Power cable	04151856
7	Signal cable between the PSU and the ESM	04080441
8	Ground cable between the PSU and the ESM (10 mm^2)	04151857
9	Wall mounting kit	21153226
10	Fitting bag (including terminals, labels, tubing, and cable ties)	02231YSG

Procedure

Step 1 Install the UPS.

1. Install a mounting kit.

 Copyright © Huawei Technologies Co., Ltd.

Figure 7-20 Installing a mounting kit

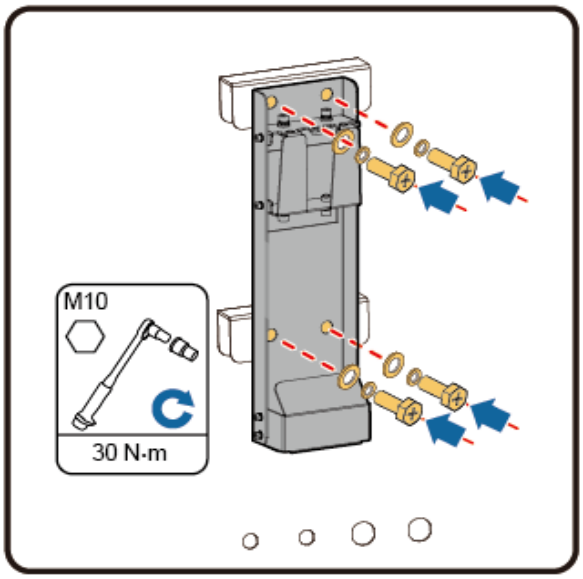

2. Move the mounting kit from the rear of an ESM to the left side, and install the ESM on the outer wall of the STS.

Figure 7-21 Installing an ESM

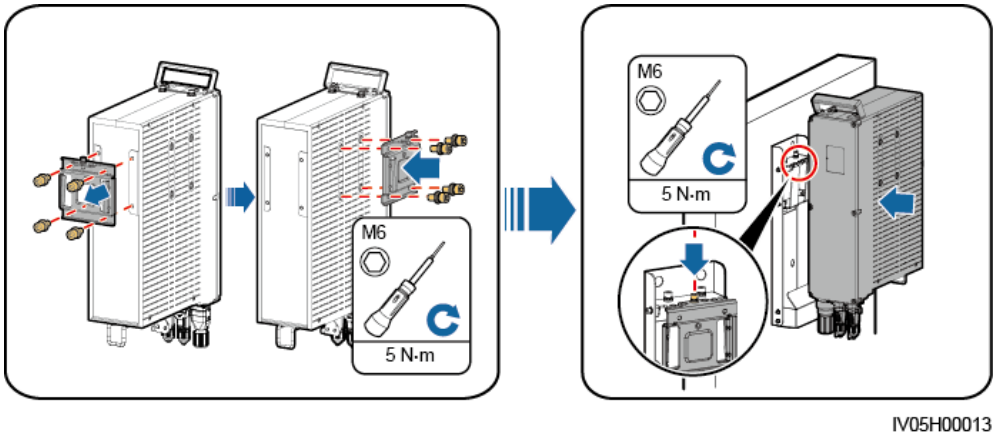

3. Install the connecting kit and combine the PSU with the ESM.

Figure 7-22 Installing a PSU

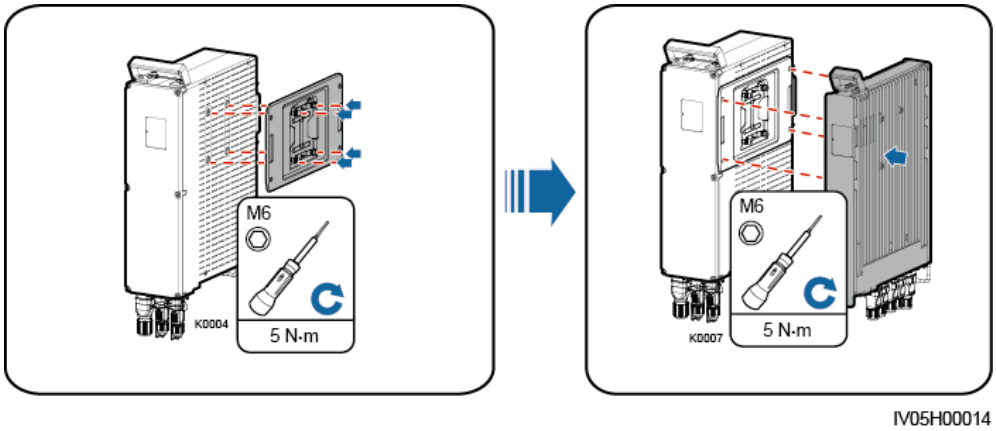

4. Install a connecting plate.

Figure 7-23 Installing a connecting plate

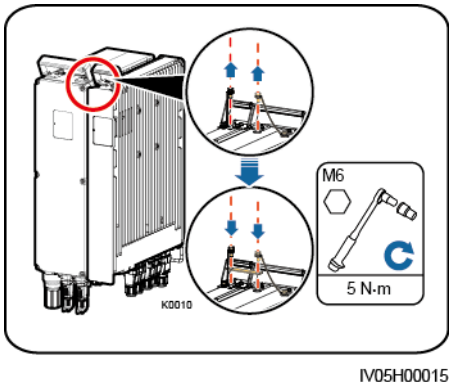

Step 2 Connect a PE cable.

Figure 7-24 Connecting a PE Cable

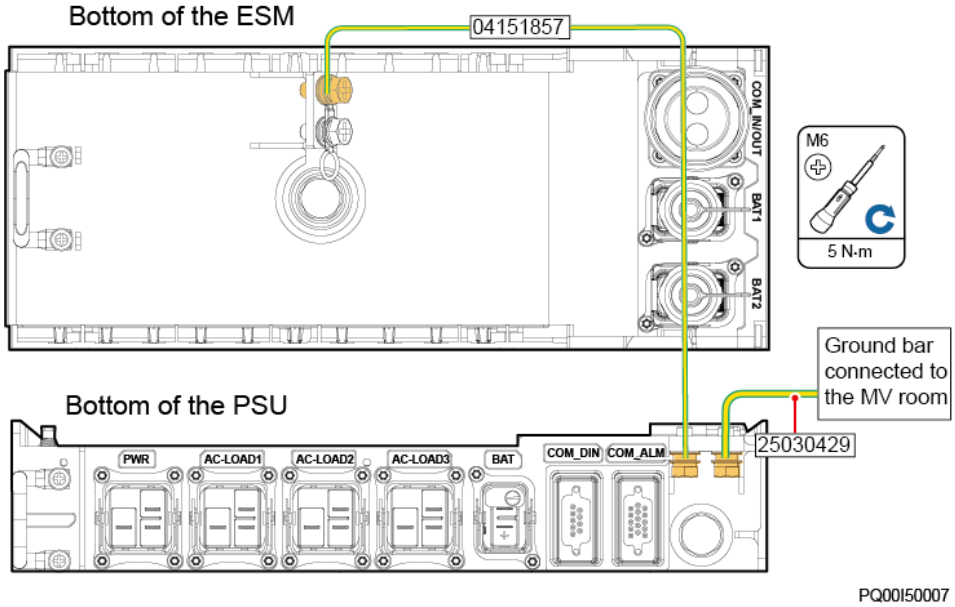

Step 3 Connect the cables between the PSU and the ESM.

Figure 7-25 Connecting cables

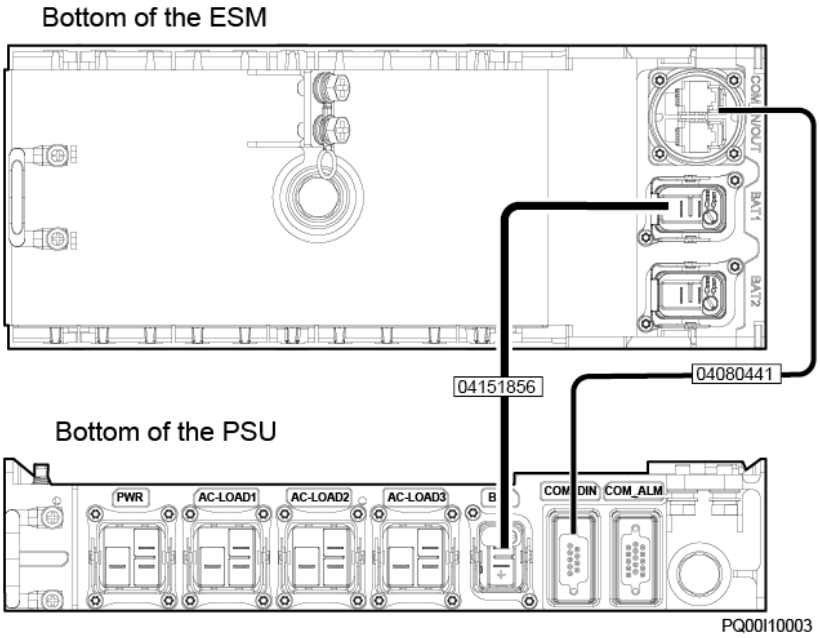

Step 4 Connect AC power cables.

Figure 7-26 Connecting AC power cables

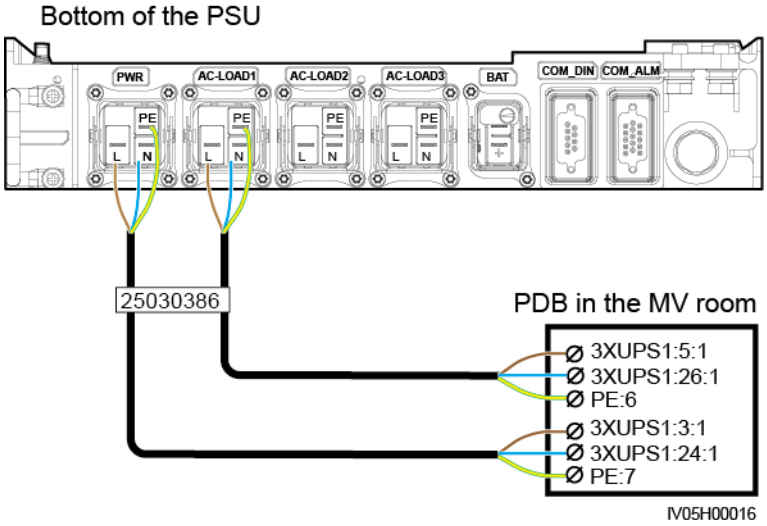

Step 5 Move the bridgeware between 3XUPS1 terminals 3–4 to terminals 4–5 and the bridgeware between terminals 24–25 to terminals 25–26. (The 3XUPS1 wiring terminal placed in the power distribution box in the MV room.)

Step 6 Connect a signal cable for the SACU. Insulate the unused cable terminals and bind them in the cable holder.

Figure 7-27 Connecting a signal cable for the SACU

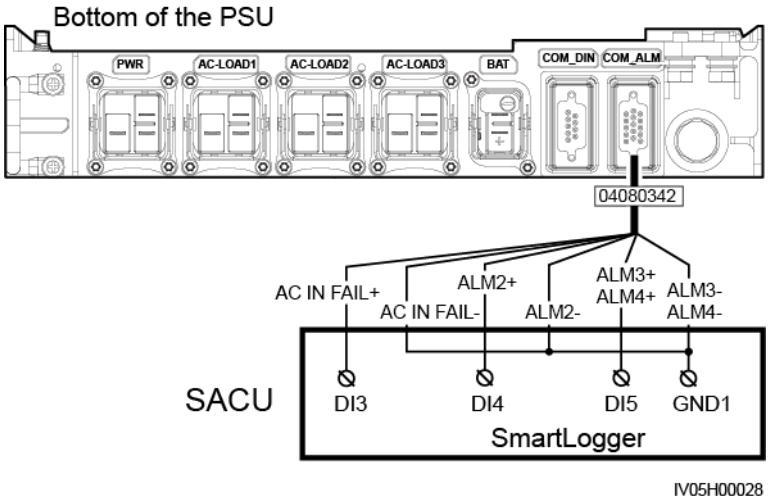

----End

8 Verifying the Installation and Cable Connections

No.	Acceptance criteria
1	All onsite components are installed correctly and securely.
2	All switches are OFF.
3	All cables are connected correctly and securely.
4	All screws are tightened.
5	Unused cable holes are covered with waterproof caps.
6	The cable holes in use are sealed.
7	The installation space is proper, and the installation environment is clean and tidy.
8	All doors of the STS are closed and properly locked.

 Copyright © Huawei Technologies Co., Ltd.

A FAQ

A.1 How Do I Repair Paint Damage on the Container?

Prerequisites

- Do not apply paint in bad weather, such as rain, snow, strong wind, and sandstorm, when there is no shelter outdoors.
- You have prepared the required paint that matches the color palette delivered with equipment.

Paint Repair

The container should be intact. If paint has flaked off in a specific area, repaint that area.

NOTE

Check the paint damage on the container and prepare appropriate tools and materials. The number of materials depends on site requirements.

Table A-1 Paint repair

Paint Damage	Tools and Materials	Procedure	Description
Slight scratch (steel base material not exposed)	Spray paint or paint, brush (required for repainting a small area), fine sandpaper, anhydrous alcohol, cotton cloth, and painting gun (required for repainting a large area)	Steps 1, 2, 4, and 5	1. For the color of the finish coat (acrylic acid paint), see the delivered color palette and Pantone number. specified on it. 2. For a few smudges, scratches, or rust, manual paint spraying or brushing is recommended. 3. For many
Smudges and rust that cannot be wiped off			
Deep scratch (primer damaged, steel base material exposed)	Spray paint or paint, zinc-rich primer, brush (required for repainting a small area), fine	Steps 1, 2, 3, 4, and 5	

Paint Damage	Tools and Materials	Procedure	Description
	sandpaper, anhydrous alcohol, cotton cloth, painting gun (required for repainting a large area)		scratches or large-area smudges and rust, use a painting gun to spray paint. 4. The paint coating should be thin and even. Paint drops are prohibited on the coating. The surface should be smooth. 5. Leave the repainted area for about 30 minutes before performing any further operation.
Logo and pattern damage	If a logo or pattern is damaged, provide the logo size and color number. Seek help from the local advertisement coating supplier to formulate a repair solution based on the logo size, color, and damage.		
Dent	1. If a dent is less than 100 mm^2 in area and less than 3 mm in depth, fill the dent with Poly-Putty base and then perform the same operations as those for processing deep scratches. 2. If a dent is greater than 100 mm^2 in area or greater than 3 mm in depth, ask the local supplier for an appropriate repainting solution.		

Procedure

Step 1 Gently polish the damaged areas using fine sandpaper to remove smudges or rust.

Figure A-1 Polishing a damaged area using sandpaper

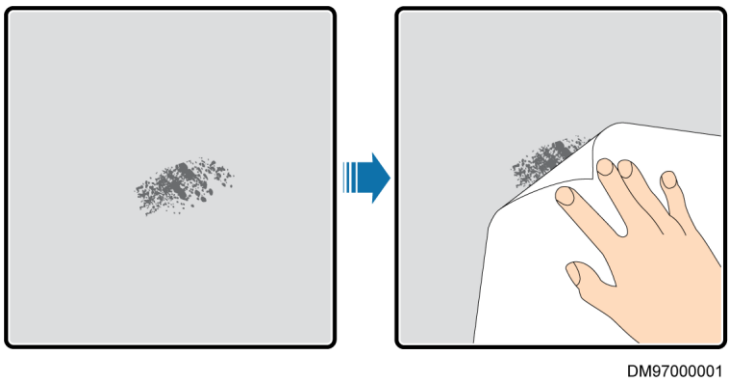

Step 2 Dip a piece of cotton cloth into anhydrous alcohol and wipe the polished or damaged area to remove the dirt and dust. Then wipe off the alcohol with a clean and dry cotton cloth.

 Copyright © Huawei Technologies Co., Ltd.

Figure A-2 Wiping a polished or damaged area using anhydrous alcohol

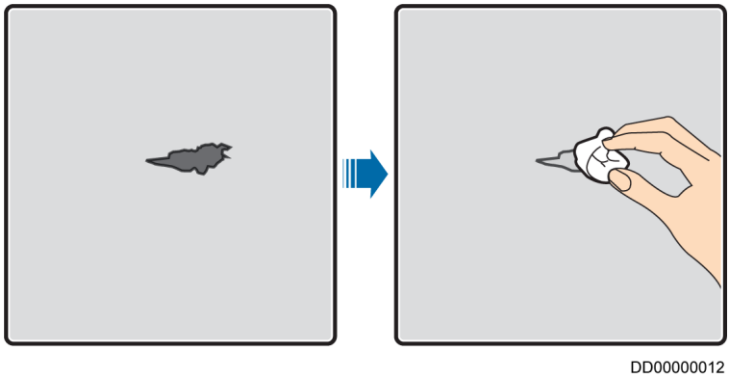

Step 3 Paint zinc-rich primer on the damaged coat using a brush or painting gun.

NOTICE

- If the base material is exposed in the area to be repaired, apply epoxy zinc-rich primer, wait until the paint has dried, and then apply acrylic acid top coating.
- Select epoxy zinc-rich primer or acrylic acid top coating with a color the same as the surface coating color of the equipment.

Step 4 Apply paint evenly to the damaged area based on the damage degree of the paint using a spray bottle, brush, or painting gun until all damage traces are invisible.

NOTICE

- Ensure that the painting is thin, even, and smooth.
- In the case that a container pattern has different colors, to prevent undamaged areas and those with different colors as the damaged area from being polluted during repainting, cover such areas using white paper and adhesive tape before repairing paint.

Figure A-3 Repainting a damaged area

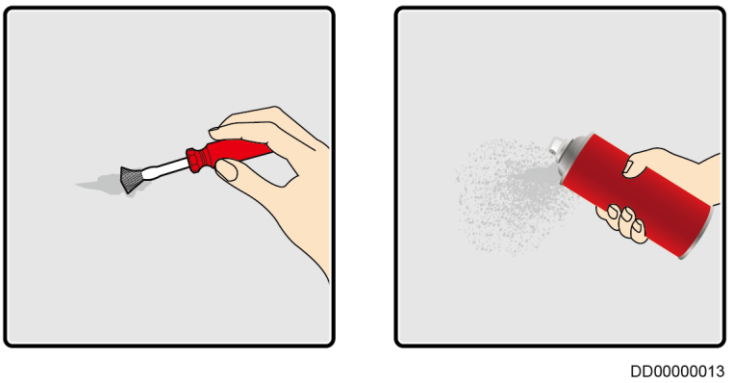

Step 5 Wait for 30 minutes and check whether the painting meets the requirements.

NOTE

- The color of the repainted area must be consistent with that of the surrounding area. Use a colorimeter to measure the color difference (Δ_E), which should be less than or equal to 3. If a colorimeter is unavailable, ensure that there is no visible edge between the repainted area and the surrounding area. The paint should also be free of bulges, scratches, flaking, or cracks.
- If you choose to spray paint, it is recommended that you spray paint three times before checking the result. If the color does not meet the requirements, paint more times until the painting meets the requirements.

----End

Paint Supply Information

Table A-1 STS paint requirements

Item	Requirement	Item	Requirement
Primer thickness	60 μm	Primer type	Epoxy zinc rich paint
Intermediate coat thickness	120 μm	Intermediate coat type	Zinc-rich paint
Top coat thickness	60 μm	Color number of the top coat	Obtain the color number based on the color plate delivered with the product.

NOTE

The following is a paint model list provided by Huawei. The list may be updated irregularly and is for reference only. The price of paint and technical services shall be subject to local price standards.

Supplier	Purpose	Paint Model
Hempel	Container coating	Zinc-rich primer for pretreatment: HEMPADUR ZINC (shopprimer) 1536C/19830 Zinc-rich primer for the entire container: HEMPADUR ZINC (on line) 1536C/19830 Intermediate coat: HEMPADUR FAST DRY 15560/12170 Top coat: HEMPATHANE 55210/17630 (RAL9003)
	Logo	Red: HEMPATHANE 55210/57200 (RAL3020) Black: HEMPATHANE 55210-19990 (RAL9005)
CMP	Container coating	Zinc-rich primer for pretreatment: EPICON ZINC SC B-2 M(SHOP PRIMER) Zinc-rich primer for the entire container:

Supplier	Purpose	Paint Model
		EPICON ZINC SC B-2 M(ON LINE ZINC) Intermediate coat: EPICON SC PRIMER GREY CSC-9107 Top coat: UNYMARINE SC FINISH WHITE CSC-9205 (RAL-9003)
	Logo	Red: UNYMARINE SC MARKING RAL-3020 Black: UNYMARINE SC MARKING RAL-9005

A.2 Requirements for the STS-3000K-H1 Foundation Dimensions

NOTICE

- Construct a foundation of the correct dimensions based on the site design drawing. The preceding figure is for reference only.
- Unmarked sizes shall be determined according to onsite conditions.
- Reserve pressure relief channels for the ring main unit, and add protective measures to prevent high temperature gas from burning nearby personnel during pressure relief.
- The ladder should not block the low voltage and MV cables in and out. The insulation ladder is recommended to be put in front of the door when maintenance.

The technical requirement:

- The size of each cement column is recommended to be no less than 6218 mm x 600 mm, and the container shall be placed in the center of the foundation. Height of the column shall be determined according to the actual situation on site.
- The outline of the smart transformer station is 6058 mm (L) x 2438 mm (W).
- Weight of STS-3000K-H1 is no more than 15 t and transformer oil is mineral oil, noncorrosive. And the volume of transformer oil is about 1880 L (about 1.65 t).

 Copyright © Huawei Technologies Co., Ltd.

Figure A-4 Foundation dimensions

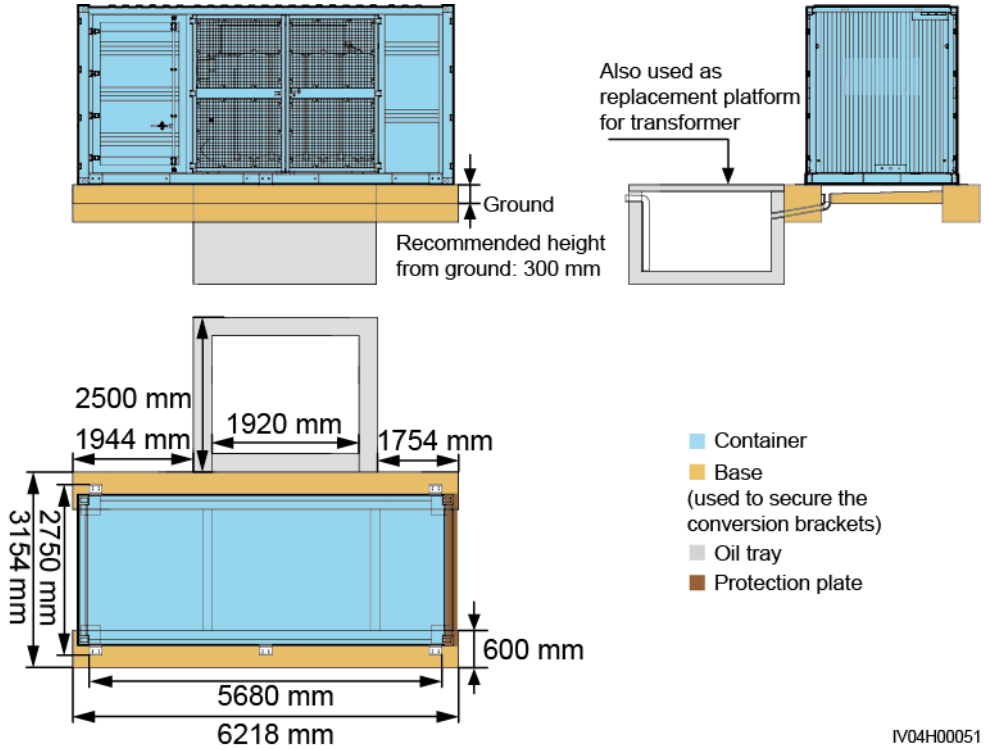

A.3 Requirements for the STS-6000K-H1 Foundation Dimensions

NOTICE

- Construct a foundation of the correct dimensions based on the site design drawing. The preceding figure is for reference only.
- Unmarked sizes shall be determined according to onsite conditions.
- Reserve pressure relief channels for the ring main unit, and add protective measures to prevent high temperature gas from burning nearby personnel during pressure relief.
- The ladder should not block the low voltage and MV cables in and out. The insulation ladder is recommended to be put in front of the door when maintenance.

The technical requirement:

- The size of each cement column is recommended to be no less than 6218 mm x 600 mm, and the container shall be placed in the center of the foundation. Height of the column shall be determined according to the actual situation on site.
- The outline of the smart transformer station is 6058 mm (L) x 2438 mm (W).
- Weight of STS-6000K-H1 is no more than 22 t and transformer oil is mineral oil, noncorrosive. And the volume of transformer oil is about 3850 L (about 3.4 t).

 Copyright © Huawei Technologies Co., Ltd.

Figure A-5 Foundation dimensions

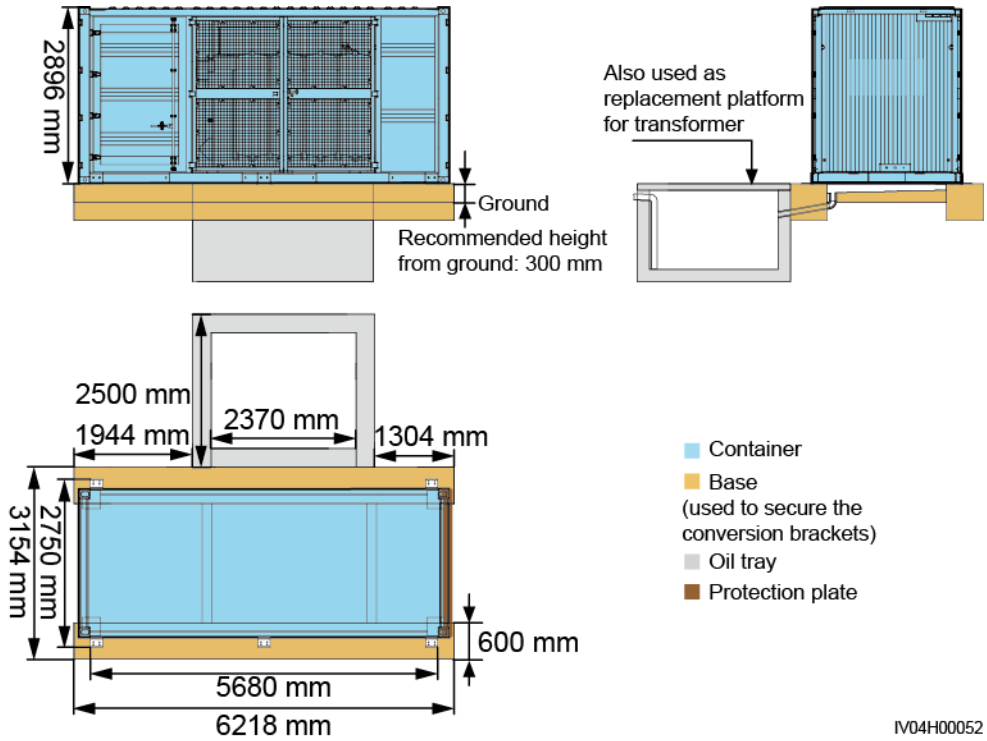

B Acronyms and Abbreviations

A	
ACB	air circuit breaker
C	
COM	communication
E	
EMC	electromagnetic compatibility
I	
ID	identifier
L	
LCD	liquid crystal display
LV	low voltage
M	
MV	medium voltage
P	
PDB	power distribution box
PEI	peak efficiency index
S	

 Copyright © Huawei Technologies Co., Ltd.

STS	smart transformer station
T	
TR	transformer

Other ManualsLib Projects

www.manualslib.com

www.manualslib.de

www.manualslib.es

www.manualslib.fr

www.manualslib.nl

www.manualslib.mx

www.manualslib.tech 30+ Languages