SUN2000-(20KTL, 29.9KTL, 30KTL, 36KTL, 40KTL)-M3

User Manual

Issue	18
Date	2024-03-10

HUAWEI TECHNOLOGIES CO., LTD.

Copyright © Huawei Technologies Co., Ltd. 2024. All rights reserved.

No part of this document may be reproduced or transmitted in any form or by any means without prior written consent of Huawei Technologies Co., Ltd.

Trademarks and Permissions

HUAWEI and other Huawei trademarks are trademarks of Huawei Technologies Co., Ltd.
All other trademarks and trade names mentioned in this document are the property of their respective holders.

Notice

The purchased products, services and features are stipulated by the contract made between Huawei and the customer. All or part of the products, services and features described in this document may not be within the purchase scope or the usage scope. Unless otherwise specified in the contract, all statements, information, and recommendations in this document are provided "AS IS" without warranties, guarantees or representations of any kind, either express or implied.

The information in this document is subject to change without notice. Every effort has been made in the preparation of this document to ensure accuracy of the contents, but all statements, information, and recommendations in this document do not constitute a warranty of any kind, express or implied.

Huawei Technologies Co., Ltd.

Address: Huawei Industrial Base
Bantian, Longgang
Shenzhen 518129
People's Republic of China

Website: https://e.huawei.com

About This Document

Purpose

This document describes the SUN2000-20KTL-M3, SUN2000-29.9KTL-M3, SUN2000-30KTL-M3, SUN2000-36KTL-M3, and SUN2000-40KTL-M3 (also referred to as SUN2000) in terms of their installation, electrical connections, commissioning, maintenance, and troubleshooting. Before installing and operating the inverter, ensure that you are familiar with the features, functions, and safety precautions provided in this document.

Intended Audience

This document is intended for:

- Installers
- Users

Symbol Conventions

The symbols that may be found in this document are defined as follows.

Symbol	Description
DANGER	Indicates a hazard with a high level of risk which, if not avoided, will result in death or serious injury.
WARNING	Indicates a hazard with a medium level of risk which, if not avoided, could result in death or serious injury.
CAUTION	Indicates a hazard with a low level of risk which, if not avoided, could result in minor or moderate injury.

Copyright © Huawei Technologies Co., Ltd.

Symbol	Description
NOTICE	Indicates a potentially hazardous situation which, if not avoided, could result in equipment damage, data loss, performance deterioration, or unanticipated results. NOTICE is used to address practices not related to personal injury.
NOTE	Supplements the important information in the main text. NOTE is used to address information not related to personal injury, equipment damage, and environment deterioration.

Change History

Changes between document issues are cumulative. The latest document issue contains all the changes made in earlier issues.

Issue 18 (2024-03-10)

Added **7.3.2 Setting Feed-in at Limited Current**.

Updated **A Grid Codes**.

Issue 17 (2024-02-02)

Updated **10 Technical Specifications**.

Issue 16 (2024-01-12)

Updated **2.2 Appearance**.

Updated **3 Inverter Storage**.

Updated **4.4 Moving the Inverter**.

Updated **5.1 Precautions**.

Updated **5.2 Preparing Cables**.

Updated **5.4 Connecting an AC Output Power Cable**.

Updated **5.5.1 Cable Connection Description**.

Updated **8.3 Alarm Reference**.

Updated **10 Technical Specifications**.

Updated **A Grid Codes**.

Updated **L Contact Information**.

 Copyright © Huawei Technologies Co., Ltd.

Added **M Digital Power Customer Service**.

Issue 15 (2023-11-08)

Updated **4.3 Determining the Installation Position**.

Updated **5.3 Connecting the PE Cable**.

Updated **5.7.1 Communication Modes**.

Updated **7 Human-Machine Interaction**.

Updated **10 Technical Specifications**.

Issue 14 (2023-09-20)

Updated **5.5.1 Cable Connection Description**.

Issue 13 (2023-04-28)

Updated **A Grid Codes**.

Added **K Locating Insulation Resistance Faults**.

Updated **L Contact Information**.

Issue 12 (2023-02-28)

Updated **2.1 Product Introduction**.

Updated **5.2 Preparing Cables**.

Updated **5.6 (Optional) Installing the Smart Dongle**.

Updated **10 Technical Specifications**.

Issue 11 (2023-01-10)

Updated **1 Safety Information**.

Updated **2.3 Label Description**.

Updated **4.2 Tools**.

Updated **7 Human-Machine Interaction**.

Updated **8.3 Alarm Reference**.

Updated **10 Technical Specifications**.

Added **L Contact Information**.

Issue 10 (2022-09-26)

Updated **5.2 Preparing Cables**.

Updated **5.4 Connecting an AC Output Power Cable**.

 Copyright © Huawei Technologies Co., Ltd.

Issue 09 (2022-06-30)

Updated **5.2 Preparing Cables**.

Updated **5.4 Connecting an AC Output Power Cable**.

Updated **5.5 Connecting DC Input Power Cables**.

Updated **5.7.1 Communication Modes**.

Updated **7 Human-Machine Interaction**.

Updated **7.1.3 SmartLogger Networking**.

Updated **8.3 Alarm Reference**.

Updated **10 Technical Specifications**.

Added **I PV String Access Detection**.

Issue 08 (2022-04-14)

Updated **5.2 Preparing Cables**.

Updated **5.7.1 Communication Modes**.

Updated **D Rapid Shutdown**.

Issue 07 (2022-01-30)

Updated **4.3 Determining the Installation Position**.

Updated **8.2 Routine Maintenance**.

Issue 06 (2022-01-04)

Updated **5.2 Preparing Cables**.

Updated **7.1.2 Creating a PV Plant and a User**.

Updated **7.3.1 Grid-tied Point Control**.

Updated **7.3.3 Apparent Power Control on the Inverter Output Side**.

Updated **10 Technical Specifications**.

Updated **A Grid Codes**.

Issue 05 (2021-11-25)

Updated **5.4 Connecting an AC Output Power Cable**.

Issue 04 (2021-07-25)

Updated **5.2 Preparing Cables**.

Updated **10 Technical Specifications**.

 Copyright © Huawei Technologies Co., Ltd.

Issue 03 (2021-04-15)

Updated **2.1 Product Introduction**.

Updated **5.2 Preparing Cables**.

Updated **5.5 Connecting DC Input Power Cables**.

Updated **10 Technical Specifications**.

Issue 02 (2020-11-20)

Updated **2.3 Label Description**.

Updated **4.3 Determining the Installation Position**.

Updated **5.2 Preparing Cables**.

Updated **5.7.1 Communication Modes**.

Updated **10 Technical Specifications**.

Issue 01 (2020-10-15)

This issue is the first official release.

 Copyright © Huawei Technologies Co., Ltd.

Contents

About This Document ii

1 Safety Information 1

1.1 Personal Safety 2

1.2 Electrical Safety 4

1.3 Environment Requirements 7

1.4 Mechanical Safety 8

2 Overview 13

2.1 Product Introduction 13

2.2 Appearance 16

2.3 Label Description 17

2.4 Working Principles 19

2.4.1 Circuit Diagram 19

2.4.2 Working Modes 20

3 Inverter Storage 22

4 Installation 24

4.1 Checking Before Installation 24

4.2 Tools 25

4.3 Determining the Installation Position 26

4.4 Moving the Inverter 31

4.5 Installing the Mounting Bracket 31

4.5.1 Support Mounting 32

4.5.2 Wall Mounting 33

4.6 Installing the Inverter 34

5 Electrical Connections 37

5.1 Precautions 37

5.2 Preparing Cables 38

5.3 Connecting the PE Cable 41

5.4 Connecting an AC Output Power Cable 43

5.5 Connecting DC Input Power Cables 48

5.5.1 Cable Connection Description 48

5.5.2 Connecting Cables to Amphenol Helios H4 Terminals 50

 Copyright © Huawei Technologies Co., Ltd.

5.5.3 Connecting Cables to Staubli MC4 Terminals 51
5.6 (Optional) Installing the Smart Dongle 53
5.7 Connecting Signal Cables 55
5.7.1 Communication Modes 58
5.7.2 (Optional) Connecting the RS485 Communications Cable to the SUN2000 60
5.7.3 (Optional) Connecting the RS485 Communications Cable to the Power Meter 61
5.7.4 (Optional) Connecting the Power Grid Scheduling Signal Cable 62
5.7.5 (Optional) Connecting the Rapid Shutdown Signal Cable 63

6 Commissioning 64
6.1 Checking Before Power-On 64
6.2 System Power-On 65

7 Human-Machine Interaction 67
7.1 Scenario in Which SUN2000s Are Connected to the FusionSolar Smart PV Management System 68
7.1.1 (Optional) Registering an Installer Account 68
7.1.2 Creating a PV Plant and a User 70
7.1.3 SmartLogger Networking 71
7.2 Scenario in Which Inverters Connect to Other Management Systems 71
7.3 Energy Control 71
7.3.1 Grid-tied Point Control 71
7.3.2 Setting Feed-in at Limited Current 75
7.3.2.1 Connecting the App to the Inverter or Smart Dongle 76
7.3.2.2 Scenario Where the App Connects to the SmartLogger 77
7.3.3 Apparent Power Control on the Inverter Output Side 78

8 Maintenance 80
8.1 System Power-Off 80
8.2 Routine Maintenance 81
8.3 Alarm Reference 82

9 Handling the Inverter 83
9.1 Removing the SUN2000 83
9.2 Packing the SUN2000 83
9.3 Disposing of the SUN2000 83

10 Technical Specifications 84

A Grid Codes 95

B Device Commissioning 111

C Built-in PID Recovery 114

D Rapid Shutdown 115

E NS Protection 116

F Resetting a Password 117

 Copyright © Huawei Technologies Co., Ltd.

G Setting Dry Contact Scheduling Parameters....118
H AFCI....119
I PV String Access Detection....121
J Smart I-V Curve Diagnosis....124
K Locating Insulation Resistance Faults....125
L Contact Information....129
M Digital Power Customer Service....131
N Acronyms and Abbreviations....132

1 Safety Information

Statement

Before transporting, storing, installing, operating, using, and/or maintaining the equipment, read this document, strictly follow the instructions provided herein, and follow all the safety instructions on the equipment and in this document. In this document, "equipment" refers to the products, software, components, spare parts, and/or services related to this document; "the Company" refers to the manufacturer (producer), seller, and/or service provider of the equipment; "you" refers to the entity that transports, stores, installs, operates, uses, and/or maintains the equipment.

The **Danger**, **Warning**, **Caution**, and **Notice** statements described in this document do not cover all the safety precautions. You also need to comply with relevant international, national, or regional standards and industry practices. **The Company shall not be liable for any consequences that may arise due to violations of safety requirements or safety standards concerning the design, production, and usage of the equipment.**

The equipment shall be used in an environment that meets the design specifications. Otherwise, the equipment may be faulty, malfunctioning, or damaged, which is not covered under the warranty. The Company shall not be liable for any property loss, personal injury, or even death caused thereby.

Comply with applicable laws, regulations, standards, and specifications during transportation, storage, installation, operation, use, and maintenance.

Do not perform reverse engineering, decompilation, disassembly, adaptation, implantation, or other derivative operations on the equipment software. Do not study the internal implementation logic of the equipment, obtain the source code of the equipment software, violate intellectual property rights, or disclose any of the performance test results of the equipment software.

The Company shall not be liable for any of the following circumstances or their consequences:

- The equipment is damaged due to force majeure such as earthquakes, floods, volcanic eruptions, debris flows, lightning strikes, fires, wars, armed conflicts, typhoons, hurricanes, tornadoes, and other extreme weather conditions.
- The equipment is operated beyond the conditions specified in this document.

 Copyright © Huawei Technologies Co., Ltd.

- The equipment is installed or used in environments that do not comply with international, national, or regional standards.
- The equipment is installed or used by unqualified personnel.
- You fail to follow the operation instructions and safety precautions on the product and in the document.
- You remove or modify the product or modify the software code without authorization.
- You or a third party authorized by you cause the equipment damage during transportation.
- The equipment is damaged due to storage conditions that do not meet the requirements specified in the product document.
- You fail to prepare materials and tools that comply with local laws, regulations, and related standards.
- The equipment is damaged due to your or a third party's negligence, intentional breach, gross negligence, or improper operations, or other reasons not related to the Company.

1.1 Personal Safety

DANGER

Ensure that power is off during installation. Do not install or remove a cable with power on. Transient contact between the core of the cable and the conductor will generate electric arcs or sparks, which may cause a fire or personal injury.

DANGER

Non-standard and improper operations on the energized equipment may cause fire, electric shocks, or explosion, resulting in property damage, personal injury, or even death.

DANGER

Before operations, remove conductive objects such as watches, bracelets, bangles, rings, and necklaces to prevent electric shocks.

DANGER

During operations, use dedicated insulated tools to prevent electric shocks or short circuits. The dielectric withstanding voltage level must comply with local laws, regulations, standards, and specifications.

 Copyright © Huawei Technologies Co., Ltd.

WARNING

During operations, wear personal protective equipment such as protective clothing, insulated shoes, goggles, safety helmets, and insulated gloves.

Figure 1-1 Personal protective equipment

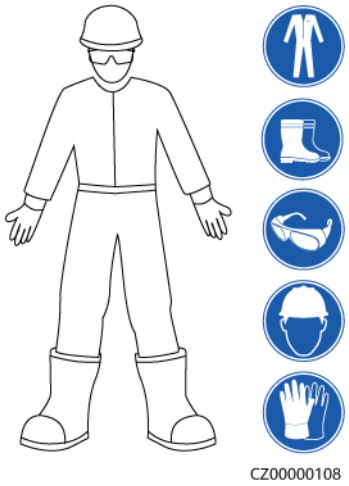

General Requirements

- Do not stop protective devices. Pay attention to the warnings, cautions, and related precautionary measures in this document and on the equipment.
- If there is a likelihood of personal injury or equipment damage during operations, immediately stop, report the case to the supervisor, and take feasible protective measures.
- Do not power on the equipment before it is installed or confirmed by professionals.
- Do not touch the power supply equipment directly or with conductors such as damp objects. Before touching any conductor surface or terminal, measure the voltage at the contact point to ensure that there is no risk of electric shock.
- Do not touch operating equipment because the enclosure is hot.
- Do not touch a running fan with your hands, components, screws, tools, or boards. Otherwise, personal injury or equipment damage may occur.
- In the case of a fire, immediately leave the building or the equipment area and activate the fire alarm or call emergency services. Do not enter the affected building or equipment area under any circumstances.

Personnel Requirements

- Only professionals and trained personnel are allowed to operate the equipment.
  - Professionals: personnel who are familiar with the working principles and structure of the equipment, trained or experienced in equipment operations and are clear of the sources and degree of various potential hazards in equipment installation, operation, maintenance

 Copyright © Huawei Technologies Co., Ltd.

  - Trained personnel: personnel who are trained in technology and safety, have required experience, are aware of possible hazards on themselves in certain operations, and are able to take protective measures to minimize the hazards on themselves and other people
- Personnel who plan to install or maintain the equipment must receive adequate training, be able to correctly perform all operations, and understand all necessary safety precautions and local relevant standards.
- Only qualified professionals or trained personnel are allowed to install, operate, and maintain the equipment.
- Only qualified professionals are allowed to remove safety facilities and inspect the equipment.
- Personnel who will perform special tasks such as electrical operations, working at heights, and operations of special equipment must possess the required local qualifications.
- Only authorized professionals are allowed to replace the equipment or components (including software).
- Only personnel who need to work on the equipment are allowed to access the equipment.

1.2 Electrical Safety

DANGER

Before connecting cables, ensure that the equipment is intact. Otherwise, electric shocks or fire may occur.

DANGER

Non-standard and improper operations may result in fire or electric shocks.

DANGER

Prevent foreign matter from entering the equipment during operations. Otherwise, equipment short-circuits or damage, load power derating, power failure, or personal injury may occur.

WARNING

For the equipment that needs to be grounded, install the ground cable first when installing the equipment and remove the ground cable last when removing the equipment.

 Copyright © Huawei Technologies Co., Ltd.

WARNING

During the installation of PV strings and the inverter, the positive or negative terminals of PV strings may be short-circuited to ground if the power cables are not properly installed or routed. In this case, an AC or DC short circuit may occur and damage the inverter. The resulting device damage is not covered under any warranty.

CAUTION

Do not route cables near the air intake or exhaust vents of the equipment.

General Requirements

- Follow the procedures described in the document for installation, operation, and maintenance. Do not reconstruct or alter the equipment, add components, or change the installation sequence without permission.
- Obtain approval from the national or local electric utility company before connecting the equipment to the grid.
- Observe the power plant safety regulations, such as the operation and work ticket mechanisms.
- Install temporary fences or warning ropes and hang "No Entry" signs around the operation area to keep unauthorized personnel away from the area.
- Before installing or removing power cables, turn off the switches of the equipment and its upstream and downstream switches.
- Before performing operations on the equipment, check that all tools meet the requirements and record the tools. After the operations are complete, collect all of the tools to prevent them from being left inside the equipment.
- Before installing power cables, check that cable labels are correct and cable terminals are insulated.
- When installing the equipment, use a torque tool of a proper measurement range to tighten the screws. When using a wrench to tighten the screws, ensure that the wrench does not tilt and the torque error does not exceed 10% of the specified value.
- Ensure that bolts are tightened with a torque tool and marked in red and blue after double-check. Installation personnel mark tightened bolts in blue. Quality inspection personnel confirm that the bolts are tightened and then mark them in red. (The marks must cross the edges of the bolts.)

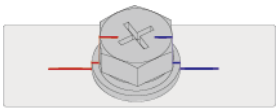

CZ0000112

- If the equipment has multiple inputs, disconnect all the inputs before operating the equipment.
- Before maintaining a downstream electrical or power distribution device, turn off the output switch on the power supply equipment.

 Copyright © Huawei Technologies Co., Ltd.

- During equipment maintenance, attach "Do not switch on" labels near the upstream and downstream switches or circuit breakers as well as warning signs to prevent accidental connection. The equipment can be powered on only after troubleshooting is complete.
- Do not open equipment panels.
- Check equipment connections periodically, ensuring that all screws are securely tightened.
- Only qualified professionals can replace a damaged cable.
- Do not scrawl, damage, or block any labels or nameplates on the equipment. Promptly replace labels that have worn out.
- Do not use solvents such as water, alcohol, or oil to clean electrical components inside or outside of the equipment.

Grounding

- Ensure that the grounding impedance of the equipment complies with local electrical standards.
- Ensure that the equipment is connected permanently to the protective ground. Before operating the equipment, check its electrical connection to ensure that it is reliably grounded.
- Do not work on the equipment in the absence of a properly installed ground conductor.
- Do not damage the ground conductor.

Cabling Requirements

- When selecting, installing, and routing cables, follow local safety regulations and rules.
- When routing power cables, ensure that there is no coiling or twisting. Do not join or weld power cables. If necessary, use a longer cable.
- Ensure that all cables are properly connected and insulated, and meet specifications.
- Ensure that the slots and holes for routing cables are free from sharp edges, and that the positions where cables are routed through pipes or cable holes are equipped with cushion materials to prevent the cables from being damaged by sharp edges or burrs.
- Ensure that cables of the same type are bound together neatly and straight and that the cable sheath is intact. When routing cables of different types, ensure that they are away from each other without entanglement and overlapping.
- Secure buried cables using cable supports and cable clips. Ensure that the cables in the backfill area are in close contact with the ground to prevent cable deformation or damage during backfilling.
- If the external conditions (such as the cable layout or ambient temperature) change, verify the cable usage in accordance with the IEC-60364-5-52 or local laws and regulations. For example, check that the current-carrying capacity meets requirements.
- When routing cables, reserve at least 30 mm clearance between the cables and heat-generating components or areas. This prevents deterioration or damage to the cable insulation layer.

 Copyright © Huawei Technologies Co., Ltd.

1.3 Environment Requirements

DANGER

Do not expose the equipment to flammable or explosive gas or smoke. Do not perform any operation on the equipment in such environments.

DANGER

Do not store any flammable or explosive materials in the equipment area.

DANGER

Do not place the equipment near heat sources or fire sources, such as smoke, candles, heaters, or other heating devices. Overheat may damage the equipment or cause a fire.

WARNING

Install the equipment in an area far away from liquids. Do not install it under areas prone to condensation, such as under water pipes and air exhaust vents, or areas prone to water leakage, such as air conditioner vents, ventilation vents, or feeder windows of the equipment room. Ensure that no liquid enters the equipment to prevent faults or short circuits.

WARNING

To prevent damage or fire due to high temperature, ensure that the ventilation vents or heat dissipation systems are not obstructed or covered by other objects while the equipment is running.

General Requirements

- Store the equipment according to the storage requirements. Equipment damage caused by unqualified storage conditions is not covered under the warranty.
- Keep the installation and operating environments of the equipment within the allowed ranges. Otherwise, its performance and safety will be compromised.
- The operating temperature range provided in the equipment's technical specifications refers to the ambient temperatures in equipment's installation environment.

 Copyright © Huawei Technologies Co., Ltd.

- Do not install, use, or operate outdoor equipment and cables (including but not limited to moving equipment, operating equipment and cables, inserting connectors to or removing connectors from signal ports connected to outdoor facilities, working at heights, performing outdoor installation, and opening doors) in harsh weather conditions such as lightning, rain, snow, and level 6 or stronger wind.
- Do not install the equipment in an environment with dust, smoke, volatile or corrosive gases, infrared and other radiations, organic solvents, or salty air.
- Do not install the equipment in an environment with conductive metal or magnetic dust.
- Do not install the equipment in an area conducive to the growth of microorganisms such as fungus or mildew.
- Do not install the equipment in an area with strong vibration, noise, or electromagnetic interference.
- Ensure that the site complies with local laws, regulations, and related standards.
- Ensure that the ground in the installation environment is solid, free from spongy or soft soil, and not prone to subsidence. The site must not be located in a low-lying land prone to water or snow accumulation, and the horizontal level of the site must be above the highest water level of that area in history.
- Do not install the equipment in a position that may be submerged in water.
- If the equipment is installed in a place with abundant vegetation, in addition to routine weeding, harden the ground underneath the equipment using cement or gravel (the area shall be greater than or equal to 3 m x 2.5 m).
- Do not install the equipment outdoors in salt-affected areas because it may be corroded. A salt-affected area refers to the region within 500 m of the coast or prone to sea breeze. Regions prone to sea breeze vary with weather conditions (such as typhoons and monsoons) or terrains (such as dams and hills).
- Before installation, operation, and maintenance, clean up any water, ice, snow, or other foreign objects on the top of the equipment.
- When installing the equipment, ensure that the installation surface is solid enough to bear the weight of the equipment.
- After installing the equipment, remove the packing materials such as cartons, foam, plastics, and cable ties from the equipment area.

1.4 Mechanical Safety

WARNING

Ensure that all necessary tools are ready and inspected by a professional organization. Do not use tools that have signs of scratches or fail to pass the inspection or whose inspection validity period has expired. Ensure that the tools are secure and not overloaded.

 Copyright © Huawei Technologies Co., Ltd.

WARNING

Do not drill holes into the equipment. Doing so may affect the sealing performance and electromagnetic containment of the equipment and damage components or cables inside. Metal shavings from drilling may short-circuit boards inside the equipment.

General Requirements

- Repaint any paint scratches caused during equipment transportation or installation in a timely manner. Equipment with scratches must not be exposed for an extended period of time.
- Do not perform operations such as arc welding and cutting on the equipment without evaluation by the Company.
- Do not install other devices on the top of the equipment without evaluation by the Company.
- When performing operations over the top of the equipment, take measures to protect the equipment against damage.
- Use correct tools and operate them in the correct way.

Moving Heavy Objects

- Be cautious to prevent injury when moving heavy objects.

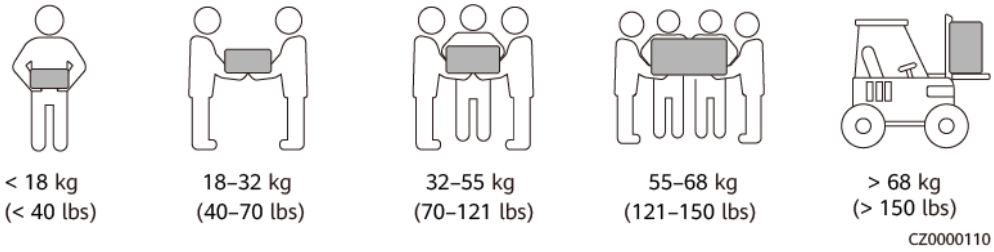

- If multiple persons need to move a heavy object together, determine the manpower and work division with consideration of height and other conditions to ensure that the weight is equally distributed.
- If two persons or more move a heavy object together, ensure that the object is lifted and landed simultaneously and moved at a uniform pace under the supervision of one person.
- Wear personal protective gears such as protective gloves and shoes when manually moving the equipment.
- To move an object by hand, approach to the object, squat down, and then lift the object gently and stably by the force of the legs instead of your back. Do not lift it suddenly or turn your body around.
- Do not quickly lift a heavy object above your waist. Place the object on a workbench that is half-waist high or any other appropriate place, adjust the positions of your palms, and then lift it.
- Move a heavy object stably with balanced force at an even and low speed. Put down the object stably and slowly to prevent any collision or drop from scratching the surface of the equipment or damaging the components and cables.

 Copyright © Huawei Technologies Co., Ltd.

- When moving a heavy object, be aware of the workbench, slope, staircase, and slippery places. When moving a heavy object through a door, ensure that the door is wide enough to move the object and avoid bumping or injury.
- When transferring a heavy object, move your feet instead of turning your waist around. When lifting and transferring a heavy object, ensure that your feet point to the target direction of movement.
- When transporting the equipment using a pallet truck or forklift, ensure that the tynes are properly positioned so that the equipment does not topple. Before moving the equipment, secure it to the pallet truck or forklift using ropes. When moving the equipment, assign dedicated personnel to take care of it.
- Choose sea, roads in good conditions, or airplanes for transportation. Do not transport the equipment by railway. Avoid tilt or jolt during transportation.

Using Ladders

- Use wooden or insulated ladders when you need to perform live-line working at heights.
- Platform ladders with protective rails are preferred. Single ladders are not recommended.
- Before using a ladder, check that it is intact and confirm its load bearing capacity. Do not overload it.
- Ensure that the ladder is securely positioned and held firm.

- When climbing up the ladder, keep your body stable and your center of gravity between the side rails, and do not overreach to the sides.
- When a step ladder is used, ensure that the pull ropes are secured.
- If a single ladder is used, the recommended angle for the ladder against the floor is 75 degrees, as shown in the following figure. A square can be used to measure the angle.

 Copyright © Huawei Technologies Co., Ltd.

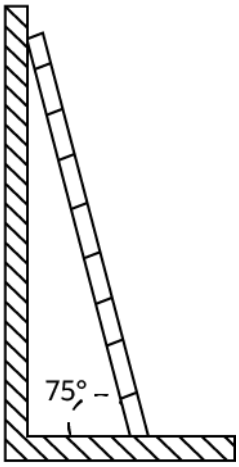

- If a single ladder is used, ensure that the wider end of the ladder is at the bottom, and take protective measures to prevent the ladder from sliding.
- If a single ladder is used, do not climb higher than the fourth rung of the ladder from the top.
- If you use a single ladder to climb up to a platform, ensure that the ladder is at least 1 m higher than the platform.

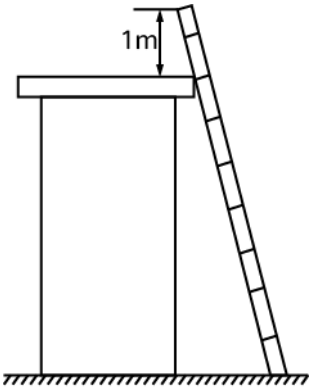

Hoisting

- Only trained and qualified personnel are allowed to perform hoisting operations.
- Install temporary warning signs or fences to isolate the hoisting area.
- Ensure that the foundation where hoisting is performed on meets the load-bearing requirements.
- Before hoisting objects, ensure that hoisting tools are firmly secured onto a fixed object or wall that meets the load-bearing requirements.
- During hoisting, do not stand or walk under the crane or the hoisted objects.
- Do not drag steel ropes and hoisting tools or bump the hoisted objects against hard objects during hoisting.
- Ensure that the angle between two hoisting ropes is no more than 90 degrees, as shown in the following figure.

 Copyright © Huawei Technologies Co., Ltd.

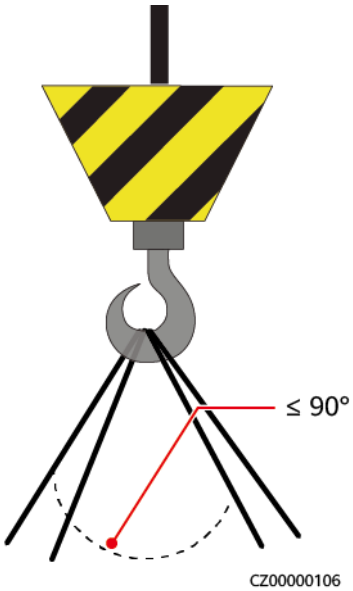

Drilling Holes

- Obtain consent from the customer and contractor before drilling holes.
- Wear protective equipment such as safety goggles and protective gloves when drilling holes.
- To avoid short circuits or other risks, do not drill holes into buried pipes or cables.
- When drilling holes, protect the equipment from shavings. After drilling, clean up any shavings.

 Copyright © Huawei Technologies Co., Ltd.

2 Overview

2.1 Product Introduction

Function

The SUN2000 is a three-phase grid-tied PV string inverter that converts the DC power generated by PV strings into AC power and feeds the power into the power grid.

Model

This document involves the following product models:

- SUN2000-20KTL-M3
- SUN2000-29.9KTL-M3
- SUN2000-30KTL-M3
- SUN2000-36KTL-M3
- SUN2000-40KTL-M3

NOTE

The SUN2000-20KTL-M3 supports 220 V (line voltage) power grids.

Figure 2-1 Model number (using SUN2000-30KTL-M3 as an example)

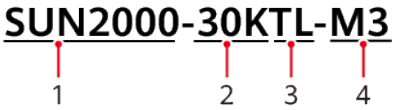

Table 2-1 Model description

No.	Meaning	Description
1	Product family identifier	SUN2000: grid-tied solar inverter

 Copyright © Huawei Technologies Co., Ltd.

No.	Meaning	Description
2	Power level identifier	• 20K: The rated power is 20 kW. • 29.9K: The rated power is 29.9 kW • 30K: The rated power is 30 kW. • 36K: The rated power is 36 kW. • 40K: The rated power is 40 kW.
3	Topology identifier	TL: transformerless
4	Product series identifier	M3: product series with an input voltage level of 1100 V DC[a]

Note a: The maximum DC input voltage for the SUN2000-20KTL-M3 is 800 V. For details, see **10 Technical Specifications**.

Networking Application

The SUN2000 applies to grid-tied systems for commercial and industrial (C&I) rooftop projects and small-sized utility plants. The system consists of PV strings, grid-tied inverters, AC switches, and power distribution units (PDUs).

Figure 2-2 Networking application – single inverter scenario

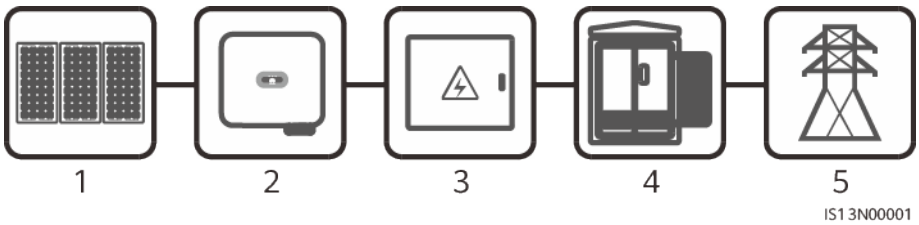

(1) PV string (2) SUN2000 (3) AC PDU

(4) Isolation transformer (5) Power grid

Supported Earthing Systems

The SUN2000 supports the TN-S, TN-C, TN-C-S, TT, and IT earthing systems.

 Copyright © Huawei Technologies Co., Ltd.

Figure 2-3 Earthing systems

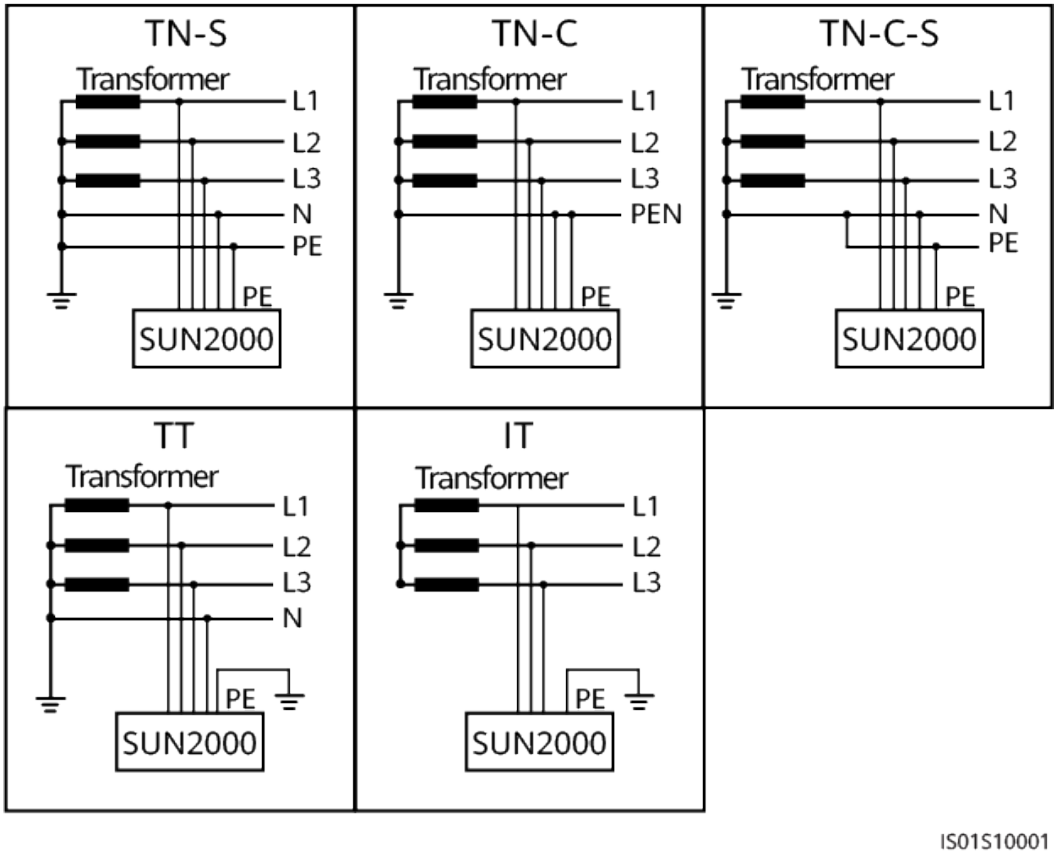

2.2 Appearance

Figure 2-4 Appearance

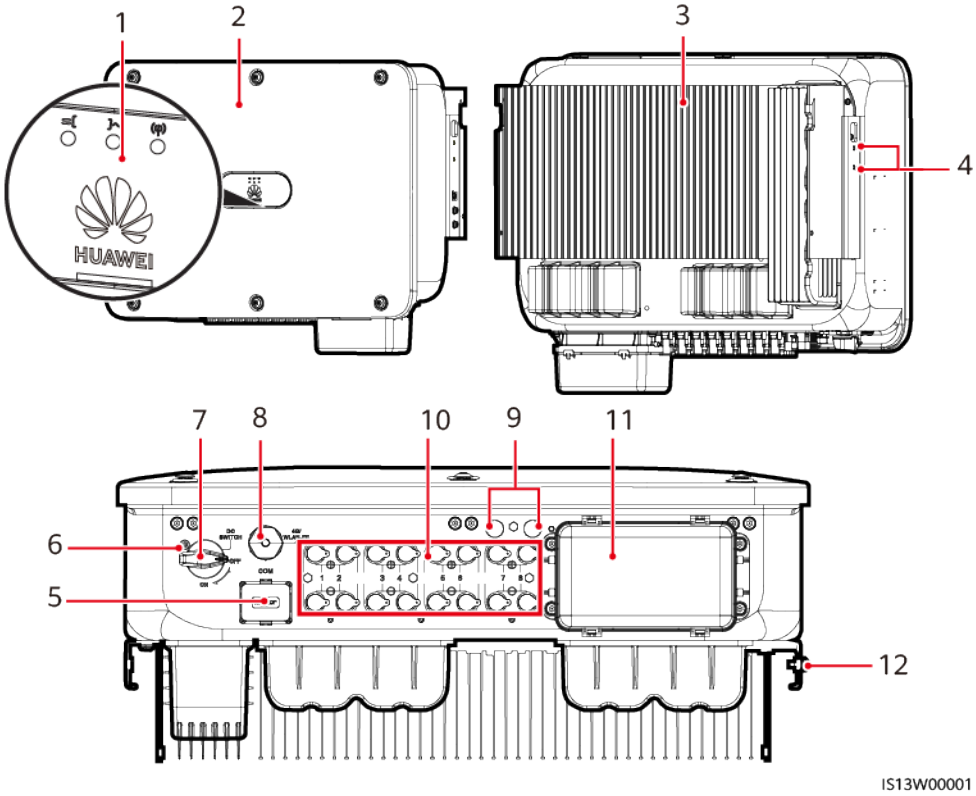

(1) LED indicators	(2) Front panel
(3) Heat sink	(4) Screw holes for fixing the sunshade
(5) Communications port (COM)	(6) Hole for the DC switch locking screw
(7) DC switch (DC SWITCH)	(8) Smart Dongle port (4G/WLAN-FE)
(9) Ventilation valves	(10) DC input terminals (PV1–PV8)
(11) AC output ports	(12) Ground point

 Copyright © Huawei Technologies Co., Ltd.

2.3 Label Description

Enclosure Labels

Symbol	Name	Meaning
	Delayed discharge	High voltage exists after the inverter is powered on. Only qualified and trained electrical technicians are allowed to perform operations on the inverter. Residual voltage exists after the inverter is powered off. It takes 5 minutes for the inverter to discharge to the safe voltage.
	High temperature hazard	Do not touch the inverter when it is running because its enclosure is hot.
	Electric shock warning	• High voltage exists after the inverter is powered on. Only qualified and trained electrical technicians are allowed to perform operations on the inverter. • High touch current exists after the inverter is powered on. Before powering on the inverter, ensure that the inverter is properly grounded.

 Copyright © Huawei Technologies Co., Ltd.

Symbol	Name	Meaning
	Refer to documentation	Reminds operators to refer to the documentation for the inverter. Losses caused by operations that do not comply with the requirements of site selection, storage, or mounting specified in the user manual are not covered under the warranty.
	Protective earthing	Indicates the position for connecting the protective earthing (PE) cable.
	Operation warning	Do not remove the DC input connector or AC output connector with power on.
	Device weight	The inverter is heavy and needs to be carried by three persons.
	Inverter handle burn warning	Do not touch the handle within 10 minutes after the inverter shuts down.

Symbol	Name	Meaning
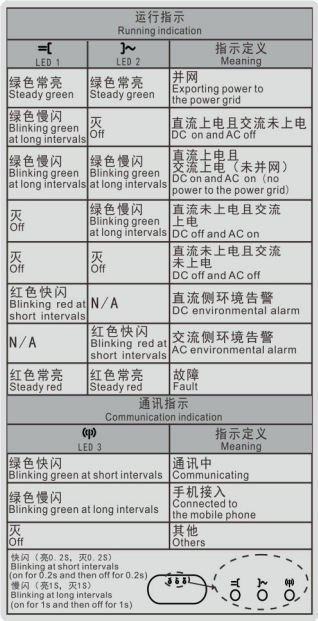 运行指示 Running indication LED 1 / LED 2 / 指示定义 Meaning 绿色常亮 Steady green / 绿色常亮 Steady green / 并网 Exporting power to the power grid 绿色慢闪 Blinking green at long intervals / 灭 Off / 直流上电且交流未上电 DC on and AC off 绿色慢闪 Blinking green at long intervals / 绿色慢闪 Blinking green at long intervals / 直流上电且交流上电（未并网） DC on and AC on（no power to the power grid） 灭 Off / 绿色慢闪 Blinking green at long intervals / 直流未上电且交流上电 DC off and AC on 灭 Off / 灭 Off / 直流未上电且交流未上电 DC off and AC off 红色快闪 Blinking red at short intervals / N/A / 直流侧环境告警 DC environmental alarm N/A / 红色快闪 Blinking red at short intervals / 交流侧环境告警 AC environmental alarm 红色常亮 Steady red / 红色常亮 Steady red / 故障 Fault 通讯指示 Communication indication LED 3 / 指示定义 Meaning 绿色快闪 Blinking green at short intervals / 通讯中 Communicating 绿色慢闪 Blinking green at long intervals / 手机接入 Connected to the mobile phone 灭 Off / 其他 Others 快闪（亮0.2s，灭0.2s） Blinking at short intervals (on for 0.2s and then off for 0.2s) 慢闪（亮1s，灭1s） Blinking at long intervals (on for 1s and then off for 1s)	Indicators	Indicates the inverter operating information.
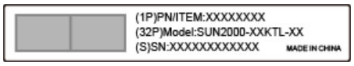 (1P)PN/ITEM:XXXXXXXX (32P)Model:SUN2000-XXKTL-XX (S)SN:XXXXXXXXXXXX MADE IN CHINA	Serial number (SN)	Indicates the product SN.
WLAN SSID: SUN2000-XXXXXXXXXX Password:XXXXXXXX	QR code for inverter WiFi connection	Scan the QR code to connect to the Huawei inverter WiFi.

2.4 Working Principles

2.4.1 Circuit Diagram

A SUN2000 can connect to a maximum of eight PV strings and has four MPPT circuits inside. Each MPPT circuit tracks the maximum power point of two PV strings. The SUN2000 converts DC power into single-phase AC power through an inverter circuit. Surge protection is supported on both the DC and AC sides.

 Copyright © Huawei Technologies Co., Ltd.

Figure 2-5 Schematic diagram

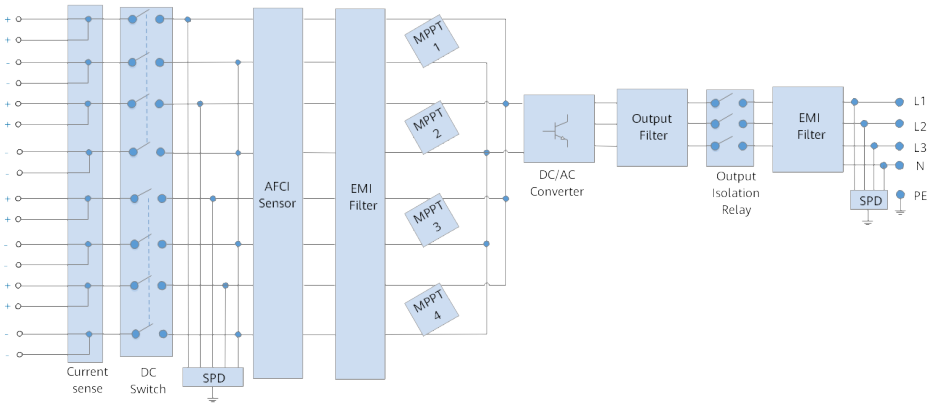

2.4.2 Working Modes

The SUN2000 can work in Standby, Operating, or Shutdown mode.

Figure 2-6 Working modes

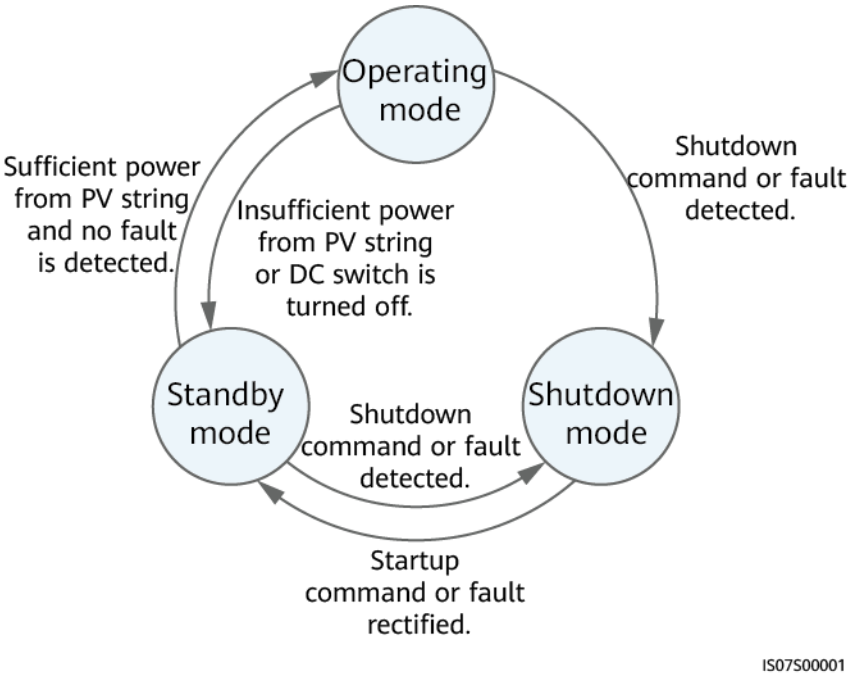

Table 2-2 Working mode description

Working Mode	Description
Standby	The SUN2000 enters Standby mode when the external environment does not meet the operating requirements. In Standby mode: ● The SUN2000 continuously performs status check and enters the Operating mode once the operating requirements are met. ● The SUN2000 enters Shutdown mode after detecting a shutdown command or a fault after startup.
Operating	In Operating mode: ● The SUN2000 converts DC power from PV strings into AC power and feeds the power to the power grid. ● The SUN2000 tracks the maximum power point to maximize the PV string output. ● If the SUN2000 detects a fault or a shutdown command, it enters the Shutdown mode. ● The SUN2000 enters Standby mode after detecting that the PV string output power is not suitable for connecting to the power grid for generating power.
Shutdown	● In Standby or Operating mode, the SUN2000 enters Shutdown mode after detecting a fault or shutdown command. ● In Shutdown mode, the SUN2000 enters Standby mode after detecting a startup command or that the fault is rectified.

 Copyright © Huawei Technologies Co., Ltd.

3 Inverter Storage

NOTICE

- Store devices according to the storage requirements. Device damage caused by unqualified storage conditions is not covered under the warranty.
- Do not store the devices without outer packaging.
- Do not tilt a packing case or place it upside down.

The following requirements shall be met if inverters are not put into use immediately:

- If an inverter is unpacked but will not be used immediately, put it back to the original packaging and seal it with tape.
- Inverters must be stored in a clean and dry environment with appropriate temperature and humidity. The air must not contain corrosive or flammable gases.
- Keep the storage temperature at –40°C to +70°C and the humidity at 5%–95% RH.
- The air must not contain corrosive or flammable gases.
- When temporarily storing inverters outdoors, do not stack them on a pallet as the ground may be uneven. Take rainproof measures such as using tarpaulins to protect inverters from rain and water.
- Do not tilt a packing case or place it upside down.
- Inverters can be stacked in a maximum of six layers. To avoid personal injury or device damage, stack inverters with caution to prevent them from falling over.
- Do not remove the outer packaging. Check the packaging regularly (recommended: once every three months). Replace any packaging that is damaged during storage.
- Do not store inverters for more than two years. If inverters have been stored for two years or longer, they must be checked and tested by professionals before being put into use.

 Copyright © Huawei Technologies Co., Ltd.

- If an inverter has not been running for six months or longer after being mounted, it may have failed and must be checked and tested by professionals before being put into operation.

 Copyright © Huawei Technologies Co., Ltd.

4 Installation

4.1 Checking Before Installation

Outer Packing Materials

Before unpacking the inverter, check the outer packing materials for damage, such as holes and cracks, and check the inverter model. If any damage is found or the inverter model is not what you requested, do not unpack the package and contact your supplier as soon as possible.

NOTE

You are advised to remove the packing materials within 24 hours before installing the inverter.

Package Contents

NOTICE

- After placing the equipment in the installation position, unpack it with care to prevent scratches. Keep the equipment stable during unpacking.

After unpacking the inverter, check that the contents are intact and complete. If any damage is found or any component is missing, contact your supplier.

NOTE

For details about the number of contents, see the *Packing List* in the packing case.

 Copyright © Huawei Technologies Co., Ltd.

4.2 Tools

Type	Tools and Instruments		
Installation	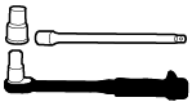 Insulated torque socket wrench (including an extension bar)	Insulated torque socket wrench (including an extension socket)	Phillips insulated torque screwdriver
	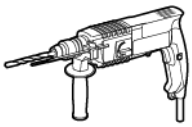 Hammer drill	Hammer drill bit	Rubber mallet
	Utility knife	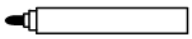 Marker	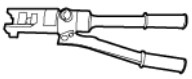 Hydraulic pliers
	Cable cutter	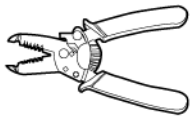 Wire stripper	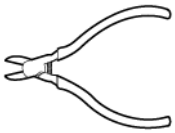 Diagonal pliers
	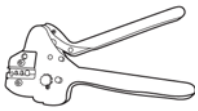 Crimping tool H4TC0003 (Amphenol)	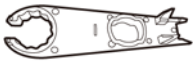 Open-end wrench H4TW0001 (Amphenol)	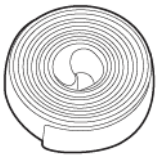 Heat shrink tubing

 Copyright © Huawei Technologies Co., Ltd.

Type	Tools and Instruments		
	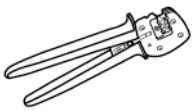 Crimping tool (model: PV-CZM-22100)	Open-end wrench (model: PV-MS-HZ or PV-MS)	Heat gun
	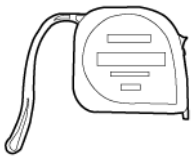 Steel measuring tape	Level	Multimeter
	Cable tie	Vacuum cleaner	-
Personal protective equipment (PPE)	Goggles	Protective shoes	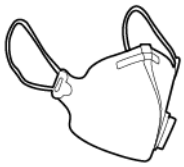 Dust mask
	Protective gloves	Insulated gloves	-

4.3 Determining the Installation Position

Basic Requirements

- The inverter is protected to IP66 and can be installed indoors or outdoors.
- Do not install the inverter in a place where personnel are easy to come into contact with its enclosure and heat sink, because these parts are hot during

 Copyright © Huawei Technologies Co., Ltd.

operation. Take measures to prevent personal injury or property loss caused by accidental contact by non-professionals or other reasons during device operation.

- Do not install the inverter in areas containing flammable materials (such as sulfur, phosphorus, liquefied petroleum gas, marsh gas, flour, and cotton) to avoid personal injury or property loss caused by fire or other reasons.
- Do not install the inverter in areas containing explosives (such as blasting agents, display shells, fireworks, and firecrackers) to avoid personal injury or property loss caused by explosion or other reasons.
- Do not install the inverter in areas with corrosive substances (such as sulfuric acid, hydrochloric acid, nitric acid, hydrogen sulfide, and chlorine) to avoid inverter failure caused by corrosion, which is not covered under the warranty.
- If the equipment is installed in a place with abundant vegetation, in addition to routine weeding, harden the ground underneath the equipment using cement or gravel (the area shall be greater than or equal to 3 m x 2.5 m).
- If the inverter is installed in public places (such as parking lots, stations, and factories) other than working and living areas, install a protective net outside the inverter and set up a safety warning sign to isolate the inverter. This is to avoid personal injury or property loss caused by accidental contact by non-professionals or other reasons during device operation.
- Keep the inverter out of reach of children.
- Do not install the inverter outdoors in salt-affected areas because it will be corroded there and may cause fire. A salt-affected area refers to a region within 500 m of the coast or prone to sea breeze. Regions prone to sea breeze vary with weather conditions (such as typhoons and monsoons) or terrains (such as dams and hills).

NOTE

The inverter shall be physically isolated from third-party wireless communications facilities and residential environments at a distance greater than 30 m.

Installation Environment Requirements

The inverter provides self-protection in high-temperature environments. Its energy yield may decrease as the ambient temperature increases. Ensure that the following installation requirements are met:

- Install the inverter in a well-ventilated environment to ensure good heat dissipation.
- If the device is installed in an enclosed environment, the heat dissipation equipment or ventilation equipment shall be installed. The indoor ambient temperature must not be higher than the outdoor ambient temperature.
- Install the inverter in a sheltered place to prevent exposure to direct sunlight.
- Reserve sufficient clearance around the inverter for installation and heat dissipation. The impact of environment changes on the clearance for heat dissipation needs be considered during design. The clearance around the inverter may become insufficient for reasons such as rotation axis change.

 Copyright © Huawei Technologies Co., Ltd.

Mounting Structure Requirements

- The mounting structure for the inverter must be fireproof. Do not install the inverter on flammable building materials to avoid personal injury or property loss caused by fire or other reasons.
- Ensure that the installation surface is solid enough to bear the weight of the inverter to avoid personal injury or property loss caused by the collapse of the mounting structure or other reasons.
- In residential areas, do not install the inverter on a drywall or wall made of similar materials which have a weak sound insulation performance because the inverter generates noise during operation.

Installation Angle Requirements

The inverter can be wall-mounted or support-mounted. The installation angle requirements are as follows:

- Install the inverter vertically or at a maximum back tilt of 15 degrees to facilitate heat dissipation.
- Do not install the inverter at forward tilted, excessive backward tilted, side tilted, horizontal, or upside down positions.

Figure 4-1 Installation angle

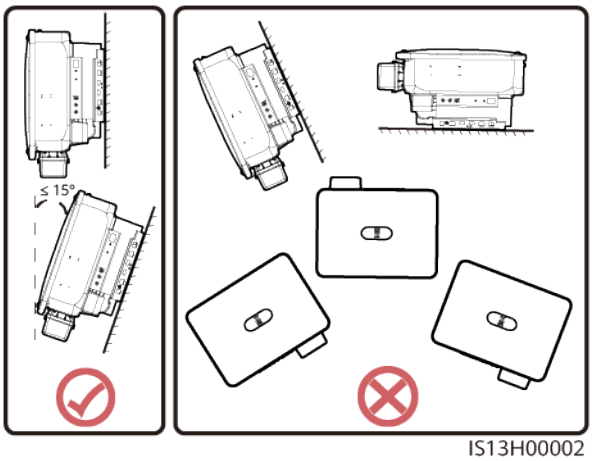

Installation Clearances

- Reserve enough clearances around the inverter to ensure sufficient space for installation and heat dissipation.

 Copyright © Huawei Technologies Co., Ltd.

Figure 4-2 Clearances

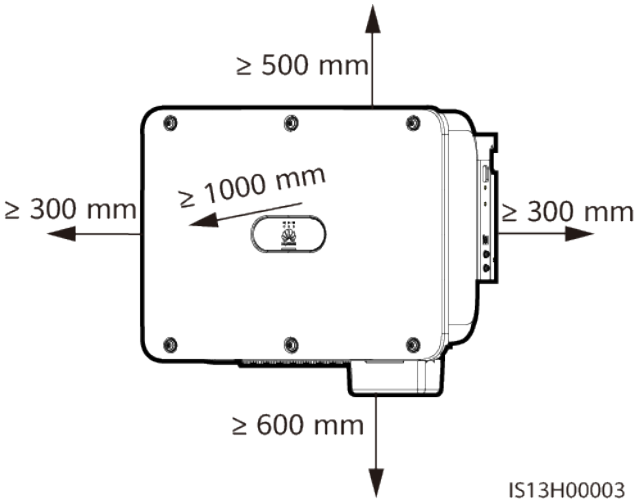

- When installing multiple inverters, install them in horizontal mode if sufficient space is available and install them in triangle mode if no sufficient space is available. Stacked installation is not recommended.

Figure 4-3 Horizontal installation mode (recommended)

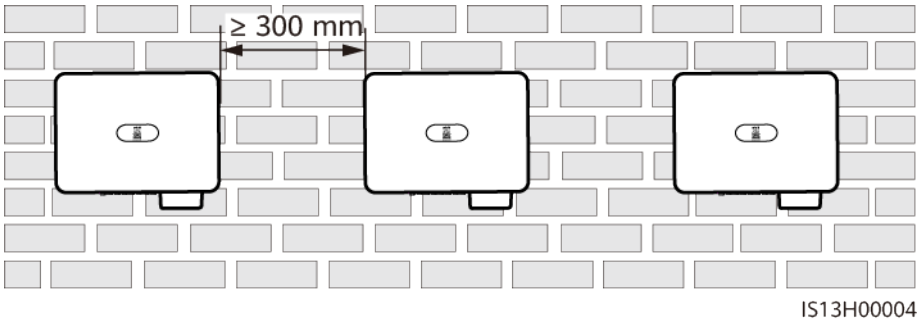

Figure 4-4 Two-layer triangle installation mode (recommended)

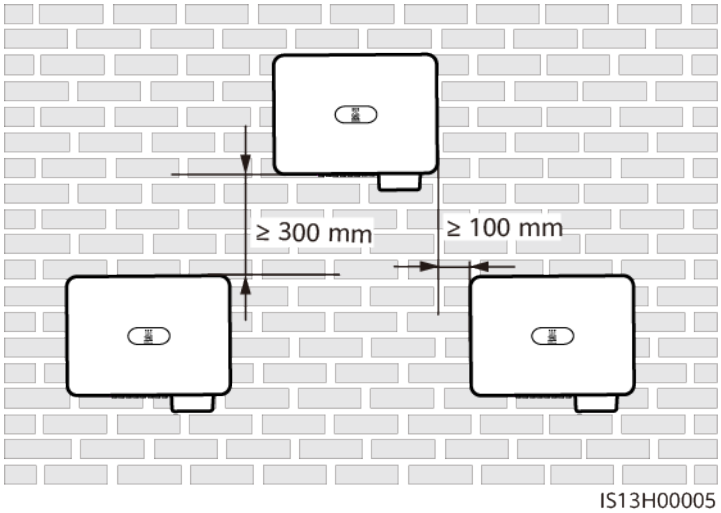

 Copyright © Huawei Technologies Co., Ltd.

Figure 4-5 Three-layer triangle installation mode (not recommended)

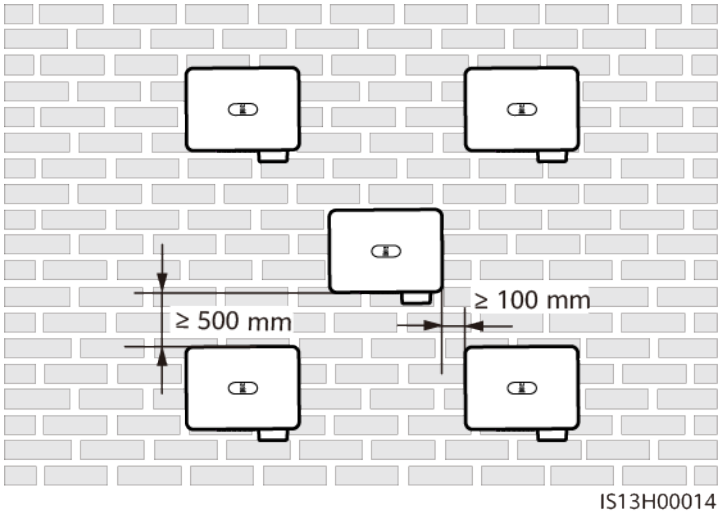

Figure 4-6 Stacked installation mode (not recommended)

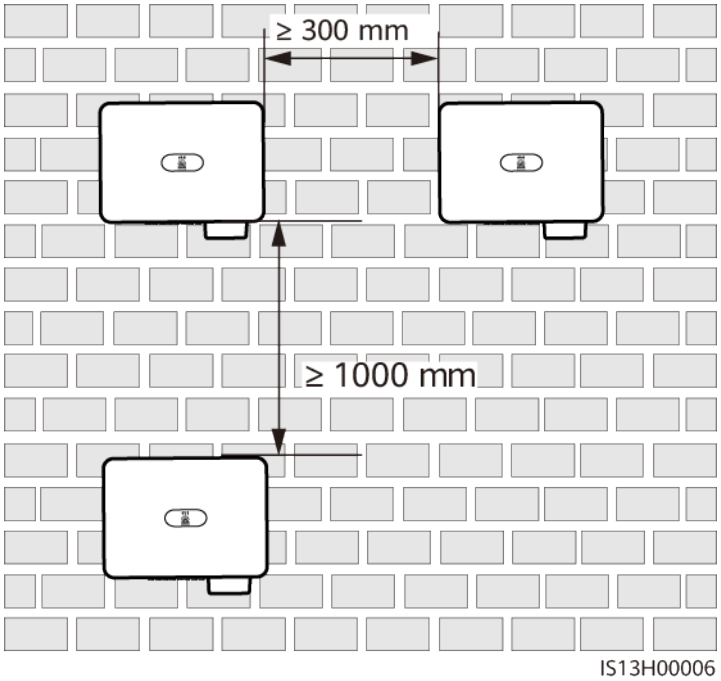

Figure 4-7 Back-to-back installation mode (not recommended)

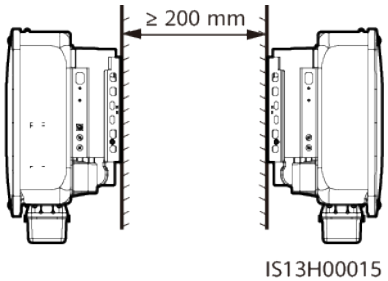

NOTE

The installation figures are for reference only and are irrelevant to the inverter cascading scenario.

4.4 Moving the Inverter

Procedure

Step 1 Lift the inverter out of the packing case and move it to the installation position.

CAUTION

- Move the inverter with care to prevent device damage and personal injury.
- Do not use the wiring terminals and ports at the bottom to support any weight of the inverter.
- When you need to temporally place the inverter on the ground, use foam, cardboard, or other protection material to prevent damage to its enclosure.

Figure 4-8 Moving the inverter

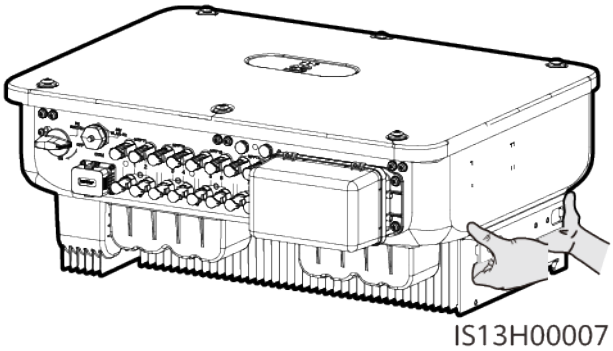

----End

4.5 Installing the Mounting Bracket

Installation Precautions

Before installing the mounting bracket, remove the security Torx wrench and set it aside.

 Copyright © Huawei Technologies Co., Ltd.

Figure 4-9 Position for binding the security Torx wrench

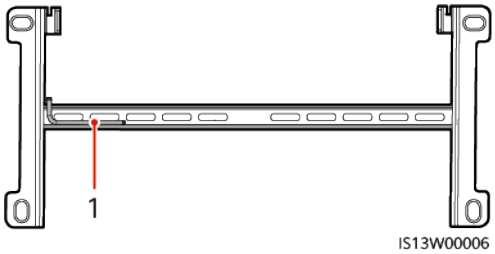

(1) Security Torx wrench

Figure 4-10 shows the dimensions of the mounting holes for the SUN2000.

Figure 4-10 Mounting bracket dimensions

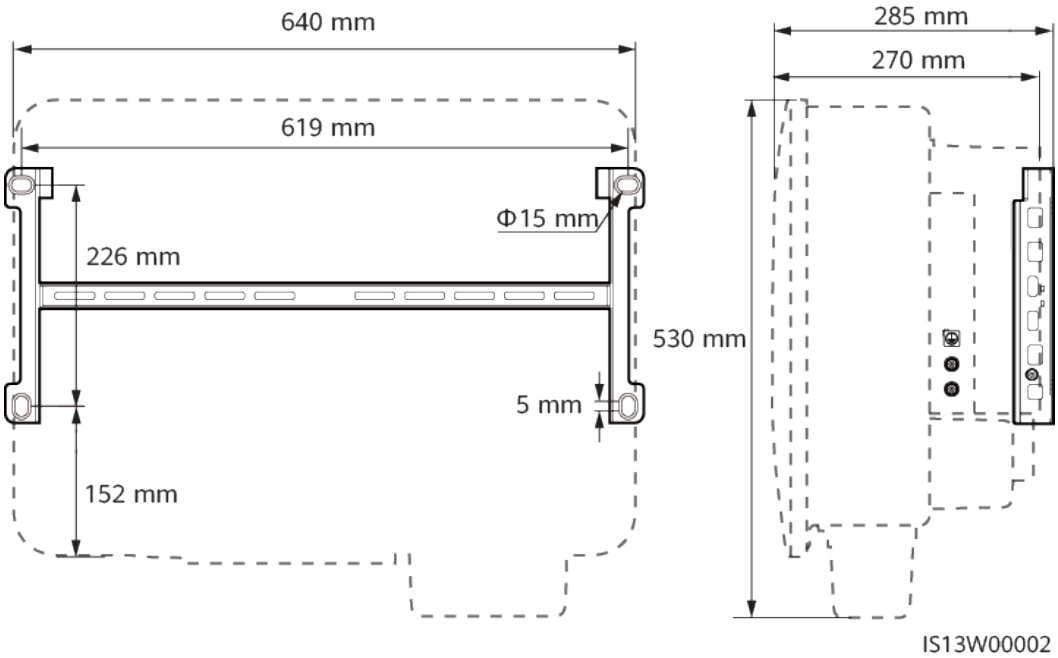

4.5.1 Support Mounting

Procedure

Step 1 Secure the mounting bracket.

Figure 4-11 Securing the mounting bracket

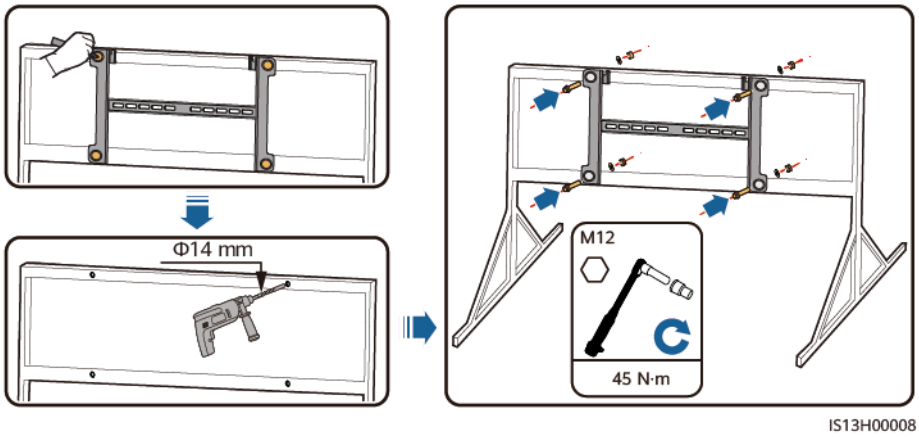

NOTE

You are advised to apply anti-rust paint on the hole positions for protection.

----End

4.5.2 Wall Mounting

Prerequisites

You have prepared expansion bolts. M12x60 stainless steel expansion bolts are recommended.

Procedure

Step 1 Determine the hole positions and mark them using a marker.

Step 2 Secure the mounting bracket.

DANGER

Avoid drilling holes into the water pipes or power cables buried in the wall.

Figure 4-12 Expansion bolt structure

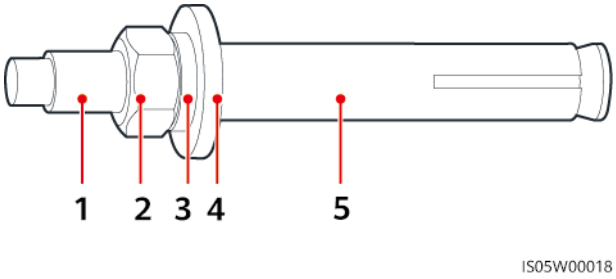

(1) Bolt (2) Nut (3) Spring washer

(4) Flat washer (5) Expansion sleeve

NOTICE

- To prevent dust inhalation or contact with eyes, wear safety goggles and a dust mask when drilling holes.
- Use a vacuum cleaner to clean up dust in and around the holes, and measure the spacing. If the holes are inaccurately positioned, drill the holes again in correct positions.
- Level the top of the expansion sleeve with the concrete wall after removing the nut, spring washer, and flat washer. Otherwise, the mounting bracket will not be securely installed on the concrete wall.

Figure 4-13 Installing an expansion bolt

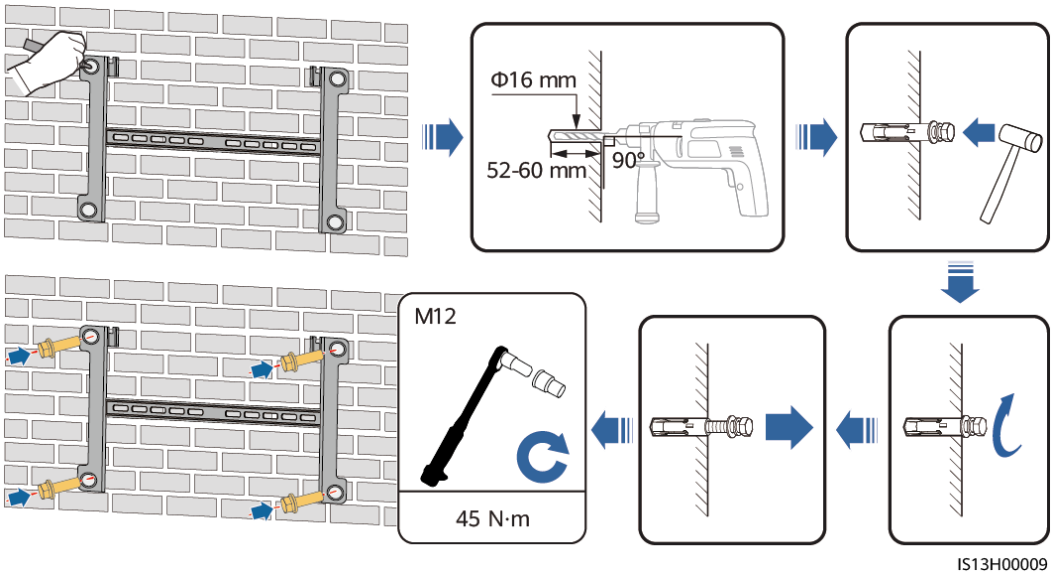

----End

4.6 Installing the Inverter

Step 1 (Optional) Install the DC switch locking screw.

NOTE

- The DC switch locking screw is used to lock the DC switch (DC SWITCH) to prevent the inverter from being started by mistake.
- For models used in Australia, install the DC switch locking screw according to local standards. The DC switch locking screw is delivered with the inverter.

 Copyright © Huawei Technologies Co., Ltd.

Figure 4-14 Installing the DC switch locking screw

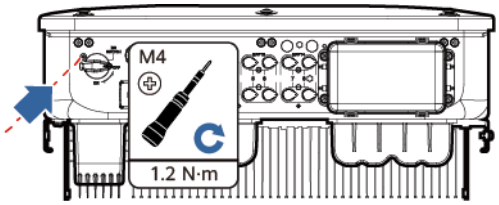

Step 2 Install the inverter on the mounting bracket.

Figure 4-15 Installing the inverter

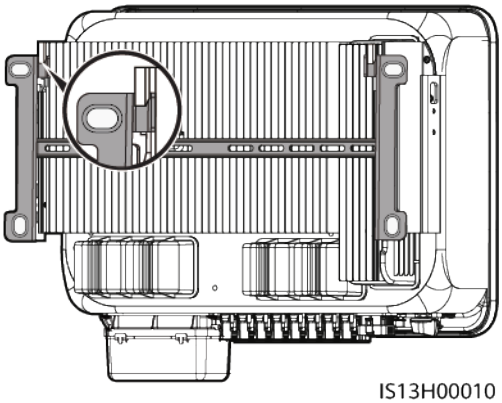

Step 3 Tighten the screws on both sides of the inverter.

Figure 4-16 Tightening the screws

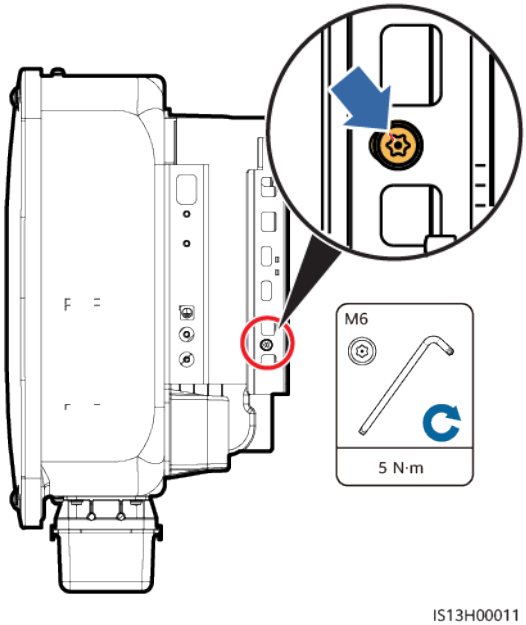

NOTICE

Secure the screws on the sides before connecting cables.

----End

 Copyright © Huawei Technologies Co., Ltd.

5 Electrical Connections

5.1 Precautions

DANGER

When exposed to sunlight, the PV arrays supply DC voltage to the inverter. Before connecting cables, ensure that all **DC SWITCH** on the inverter are OFF. Otherwise, the high voltage of the inverter may result in electric shocks.

DANGER

- The site must be equipped with qualified fire fighting facilities, such as fire sand and carbon dioxide fire extinguishers.
- Wear personal protective equipment and use dedicated insulated tools to avoid electric shocks or short circuits.

WARNING

- The equipment damage caused by incorrect cable connections is beyond the warranty scope.
- Only certified electricians are allowed to connect cables.
- Operation personnel must wear PPE when connecting cables.
- Before connecting cables to ports, leave enough slack to reduce the tension on the cables and prevent poor cable connections.
- Cables must be vertically routed into combiner boxes, PV terminals, and other wiring terminals to avoid damage caused by horizontal stress on the terminals, which is not covered under the warranty.

Copyright © Huawei Technologies Co., Ltd.

CAUTION

- Stay away from the equipment when preparing cables to prevent cable scraps from entering the equipment. Cable scraps may cause sparks and result in personal injury and equipment damage.

NOTE

The cable colors shown in the electrical connection diagrams provided in this section are for reference only. Select cables in accordance with local cable specifications (green-and-yellow cables are only used for protective earthing).

5.2 Preparing Cables

Figure 5-1 SUN2000 cable connections (the components in dashed boxes are optional)

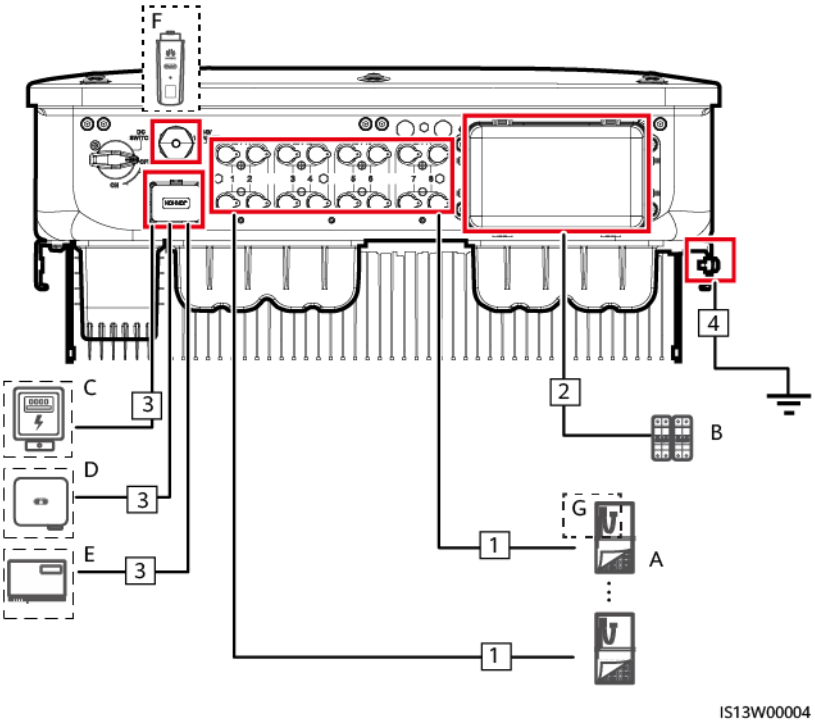

Table 5-1 Component description

No.	Component	Description	Source
A	PV string	• A PV string consists of PV modules connected in series. • The inverter supports eight PV string inputs.	Prepared by the customer

Copyright © Huawei Technologies Co., Ltd.

No.	Component	Description	Source
B	AC switch	To ensure that the inverter can be safely disconnected from the power grid when an exception occurs, connect an AC switch to the AC side of the inverter. Select an appropriate AC switch in accordance with local industry standards and regulations. Huawei recommends the following switch specifications: Three-phase AC circuit breaker with a rated voltage greater than or equal to 500 V AC and a rated current of: ● 63 A (SUN2000-29.9KTL/30KTL-M3) ● 80 A (SUN2000-20KTL-M3) ● 100 A (SUN2000-36KTL/40KTL-M3)	Prepared by the customer
C	Power meter[1]	The inverter can connect to a DTSU666-H, DTSU666-HW, YDS60-80 or YDS60-C24 power meter. [2]	Purchased from Huawei
D	SUN2000	Select a proper model as required.	Purchased from Huawei
E	SmartLogger	SmartLogger3000	Purchased from Huawei
F	Smart Dongle	Select a proper model as required.	Purchased from Huawei
G	Smart PV Optimizer[3]	MERC-1300W-P, MERC-1100W-P	Purchased from Huawei

Note [1]: For details about how to operate the power meter, see **DTSU666-HW Smart Power Sensor Quick Guide**, **YDS60-80 Smart Power Sensor Quick Guide**, **YDS60-C24 Smart Power Sensor Quick Guide**, or **DTSU666-H 100 A and 250 A Smart Power Sensor User Manual**.

Note [2]: SUN2000MA V100R001C20SPC116 and later versions can connect to DTSU666-HW power meters.

Note [3]: For details about optimizer operations, see **MERC Smart PV Optimizer User Manual**.

 Copyright © Huawei Technologies Co., Ltd.

NOTICE

Cable specifications must meet the requirements in local standards.

Table 5-2 Cable description

No.	Cable	Type	Recommended Specifications	Source
1	DC input power cable	Common outdoor PV cable in the industry (Recommended model: PV1-F)	• Conductor cross-sectional area: 4–6 mm^2 • Cable outer diameter: 5.5–9 mm	Prepared by the customer
2	AC output power cable	Outdoor copper-core/aluminum-core cable	• Conductor cross-sectional area: 16–50 mm^2 outdoor copper-core cable/35–50 mm^2 outdoor aluminum-core cable[a] • Cable outer diameter: 16–38 mm	Prepared by the customer
3	(Optional) Signal cable	Outdoor shielded twisted pair (recommended model: DJYP2VP2-2×2×0.75)	• Conductor cross-sectional area: 0.2–1 mm^2 • Cable outer diameter: 4–11 mm	Prepared by the customer
4	PE cable	Outdoor single-core copper cable	Conductor cross-sectional area: ≥ 16 mm^2	Prepared by the customer
Note a: Five-core cables with a cross-sectional area of 35 mm^2 or 50 mm^2 are not supported.				

NOTICE

If the inverter is used with an optimizer, route AC and DC power cables separately to prevent AC power cables from interfering with optimizer communication.

 Copyright © Huawei Technologies Co., Ltd.

5.3 Connecting the PE Cable

DANGER

- Ensure that the PE cable is securely connected. Otherwise, electric shocks may occur.
- Do not connect the neutral wire to the enclosure as a PE cable. Otherwise, electric shocks may occur.

NOTE

- The PE point at the AC output port is used only as a PE equipotential bonding point, and cannot substitute for the PE point on the enclosure.
- It is recommended that silicone grease or paint be applied around the ground terminal after the PE cable is connected.
- You can enable or disable phase-to-ground short-circuit protection on the app (choose **Settings > Feature parameters > Phase-to-ground short-circuit protection**) to address the situation in which a phase wire is short-circuited to PE. If this function is disabled, the inverter detects the alarm and can connect to the power grid and generate power normally.

Procedure

Step 1 Crimp an OT terminal.

NOTICE

- Avoid scratching the core wire when stripping a cable.
- The cavity formed after the conductor crimp strip of the OT terminal is crimped must wrap the core wire completely. The core wire must make close contact with the OT terminal.
- Wrap the wire crimping area with heat shrink tubing or insulation tape. The heat shrink tubing is used as an example.
- Use a heat gun carefully to avoid heat damage to the equipment.

 Copyright © Huawei Technologies Co., Ltd.

Figure 5-2 Crimping an OT terminal

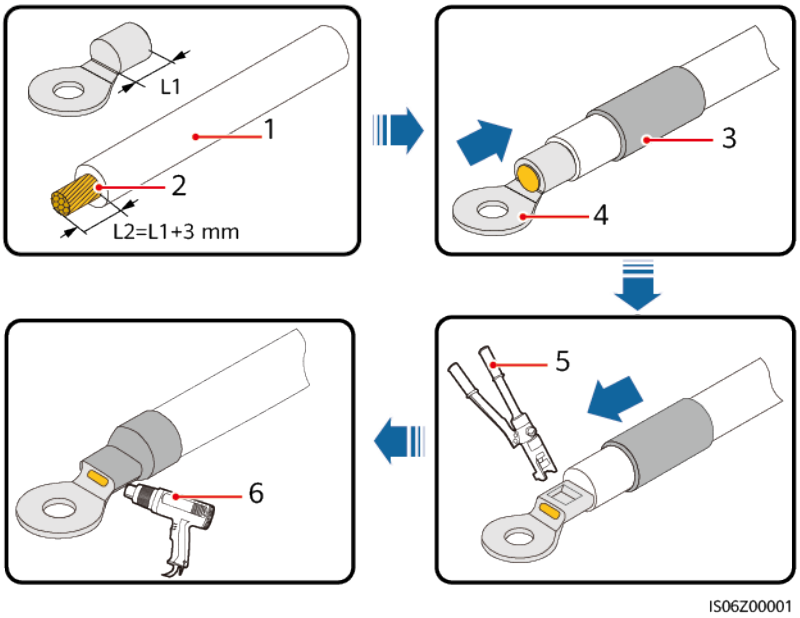

(1) Cable	(2) Core wire	(3) Heat shrink tubing
(4) OT terminal	(5) Crimping tool	(6) Heat gun

Step 2 Connect the PE cable.

Figure 5-3 Connecting the PE cable

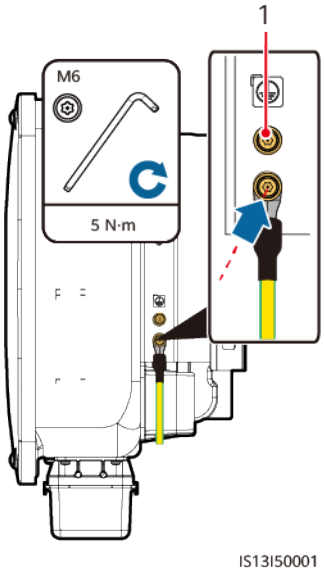

(1) Standby PE point

----End

5.4 Connecting an AC Output Power Cable

Precautions

An AC switch must be installed on the AC side of the inverter to ensure that the inverter can be safely disconnected from the power grid.

WARNING

- Do not connect loads between an inverter and an AC switch that directly connects to the inverter. Otherwise, the switch may trip by mistake.
- If an AC switch is used with specifications beyond local standards, regulations, or the Company's recommendations, the switch may fail to turn off in a timely manner in case of exceptions, causing serious faults.

CAUTION

- Each inverter shall be equipped with an AC output switch. Multiple inverters shall not connect to the same AC switch.
- Cables must be vertically routed into combiner boxes, PV terminals, and other wiring terminals to avoid damage caused by horizontal stress on the terminals, which is not covered under the warranty.

NOTICE

- If the external AC switch provides the leakage protection function, the rated residual operating current must be greater than or equal to 300 mA.
- If multiple inverters are connected to the master leakage protection device through their external AC switches, the rated residual operating current of the device must be greater than or equal to the number of inverters x 300 mA.
- Use a socket wrench and extension rod to connect the AC power cable. The extension rod must be longer than 100 mm.
- Reserve sufficient slack for the PE wire to ensure that the PE wire is the last cable bearing the force when the AC output power cable is subject to a pulling force due to force majeure.
- Do not install third-party devices in the AC connection box.
- You need to prepare M8 OT terminals by yourself.
- If the AC MBUS is used, multi-core cables are recommended, supporting a maximum communication distance of 1000 m. To use other types of AC power cables, contact the Company's technical support.

 Copyright © Huawei Technologies Co., Ltd.

Requirements for the OT or DT Terminal

- If a copper cable is used, use copper wiring terminals.
- If a copper-clad aluminum cable is used, use copper wiring terminals.
- If an aluminum alloy cable is used, use copper-aluminum transition wiring terminals, or aluminum wiring terminals along with copper-aluminum transition spacers.

NOTICE

- Do not connect aluminum wiring terminals to the AC terminal block. Otherwise the electrochemical corrosion will occur and affect the reliability of cable connections.
- Comply with the IEC61238-1 requirements when using copper-aluminum transition wiring terminals, or aluminum wiring terminals along with copper-aluminum transition spacers.
- If copper-aluminum transition spacers are used, pay attention to the front and rear sides. Ensure that the aluminum sides of spacers are in contact with aluminum wiring terminals, and copper sides of spacers are in contact with the AC terminal block.

Figure 5-4 Requirements for the OT/DT terminal

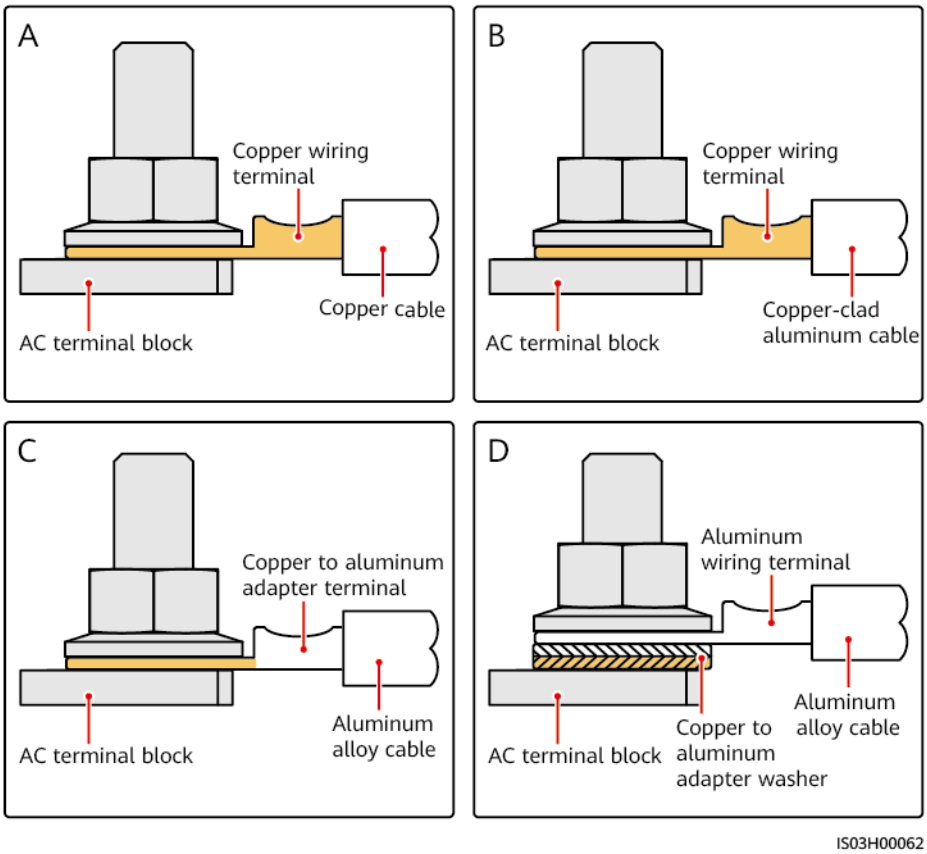

 Copyright © Huawei Technologies Co., Ltd.

Procedure

Step 1 Remove the AC terminal box and installing partition boards.

Figure 5-5 Removing the AC terminal box

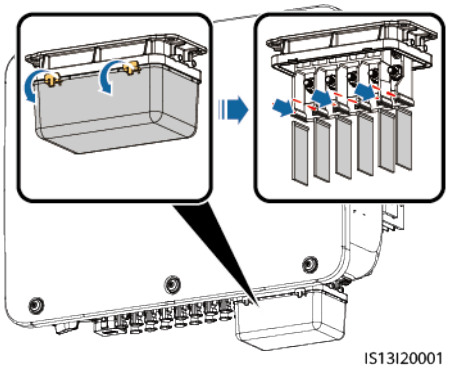

Step 2 Connect the AC output power cable.

NOTE

- Do not route a cable with a crimped OT terminal directly through the rubber liner. Otherwise, the liner may be damaged.
- Reserve sufficient slack for the PE wire to ensure that the PE wire is the last cable bearing the force when the AC output power cable is subject to a pulling force due to force majeure. It is recommended that the stripping length of the PE cable be 15 mm longer than that of other cables.
- The cable colors shown in the figures are for reference only. Select an appropriate cable according to the local standards.

Figure 5-6 Stripping an AC power cable (using a five-core cable as an example)

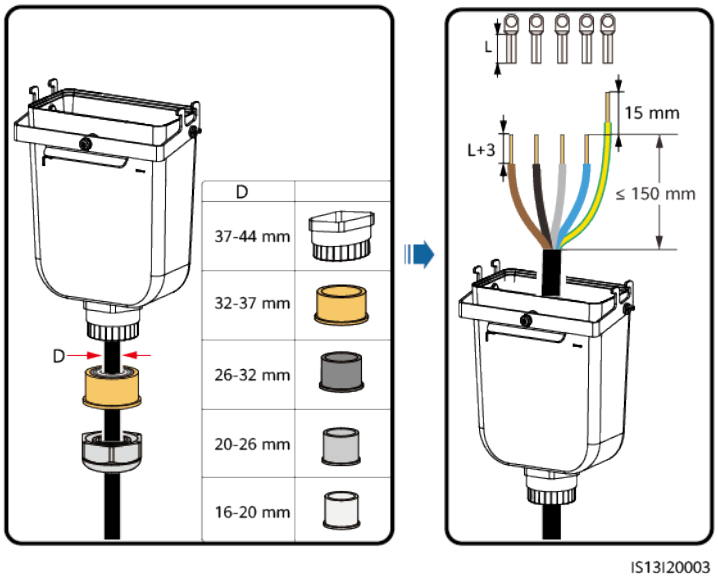

Figure 5-7 Five-core cable (L1, L2, L3, N, and PE)

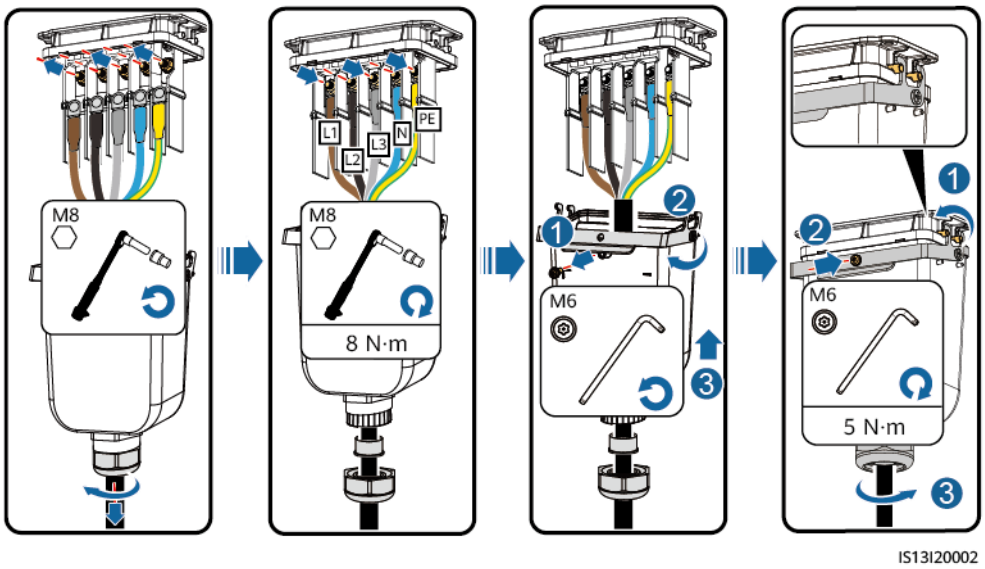

Figure 5-8 Four-core cable (L1, L2, L3, and PE)

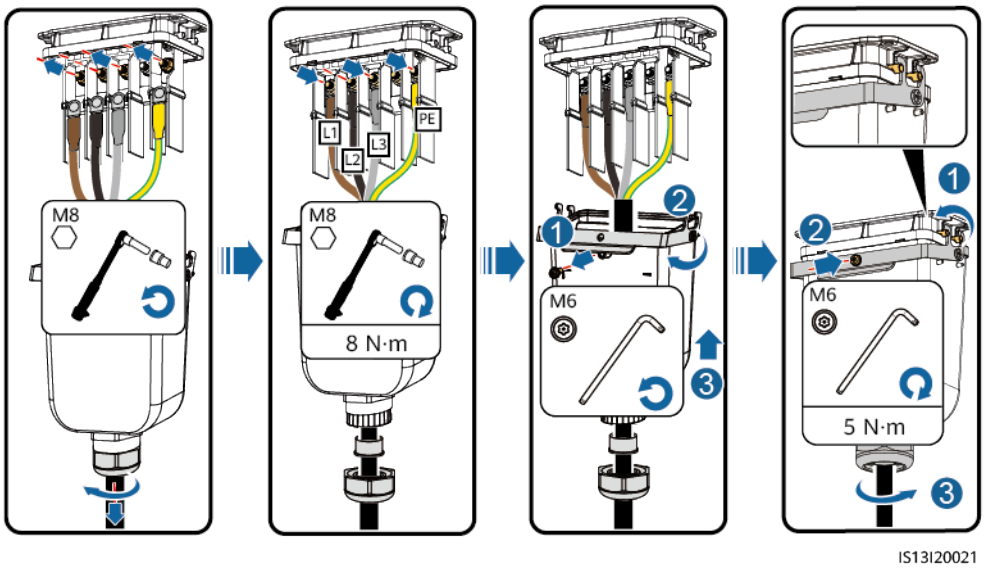

Copyright © Huawei Technologies Co., Ltd.

Figure 5-9 Four-core cable (L1, L2, L3, and N)

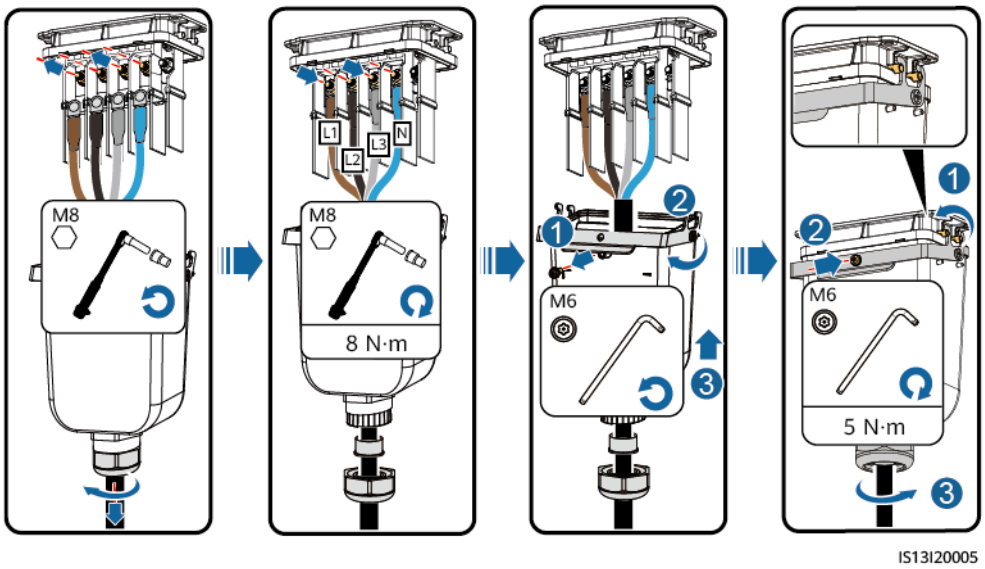

Figure 5-10 Three-core cable (L1, L2, and L3)

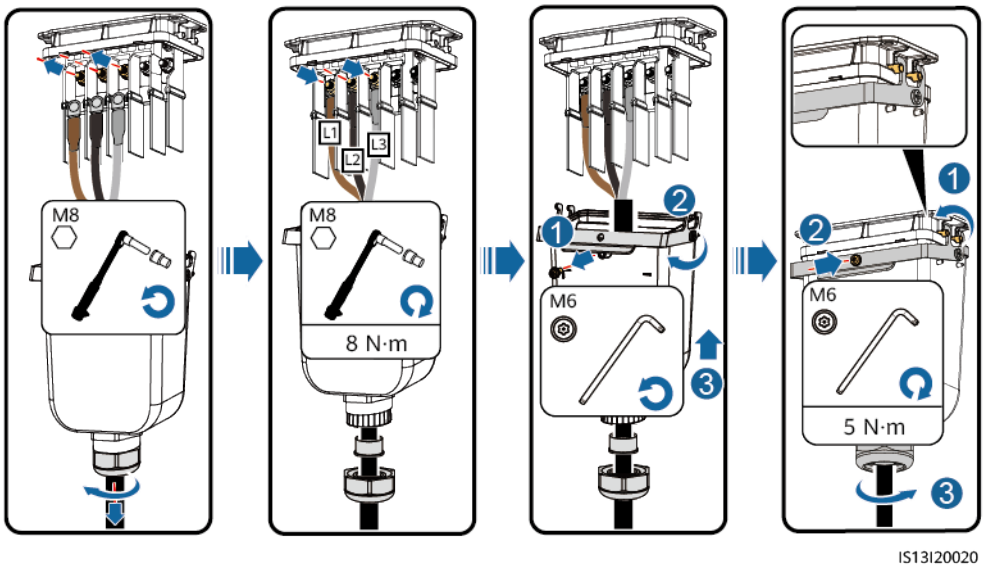

Copyright © Huawei Technologies Co., Ltd.

Figure 5-11 Wiring requirements

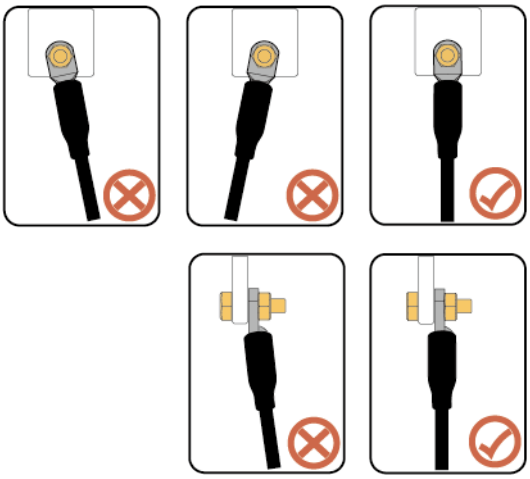

----End

5.5 Connecting DC Input Power Cables

CAUTION

- There are two models of PV connectors delivered with the device: Amphenol Helios H4 and Staubli MC4. PV connectors of different models cannot be used together. Device damage caused by mixed use of different PV connectors is not covered by the warranty.
- Take waterproof and insulation measures for unused DC power cables to avoid personal injury or property loss caused by accidental contact with high voltage or other reasons.

5.5.1 Cable Connection Description

Precautions

DANGER

- Before connecting the DC input power cables, ensure that the DC voltage is within the safe range (lower than 60 V DC) and that the DC switch on the inverter is OFF. Failing to do so may result in electric shocks.
- When the inverter is running, it is not allowed to work on the DC input power cables, such as connecting or disconnecting a PV string or a PV module in a PV string. Failing to do so may cause electric shocks.
- If no PV string connects to a DC input terminal of the inverter, do not remove the watertight cap from the DC input terminals. Otherwise, the IP rating of the inverter will be affected.

 Copyright © Huawei Technologies Co., Ltd.

WARNING

Ensure that the following conditions are met. Otherwise, the inverter may be damaged or even a fire may occur.

- PV modules connected in series in each PV string are of the same specifications.
- The DC input voltage of the SUN2000-29.9KTL/30KTL/36KTL/40KTL-M3 shall not exceed 1100 V DC under any conditions.
- The DC input voltage of the SUN2000-20KTL-M3 shall not exceed 800 V DC under any conditions.
- The polarities of electrical connections must be correct on the DC input side. The positive and negative terminals of a PV string must be connected to corresponding positive and negative DC input terminals of the inverter.
- If a DC input power cable is reversely connected, do not immediately operate on the **DC SWITCH** or positive and negative connectors. Wait until the night when solar irradiance declines and the PV string current drops to below 0.5 A. Then set the **DC SWITCH** to **OFF**, remove the positive and negative connectors, and correct the polarities of the DC input power cable.

WARNING

During the installation of PV strings and the inverter, the positive or negative terminals of PV strings may be short-circuited to ground if the power cables are not properly installed or routed. In this case, an AC or DC short circuit may occur and damage the inverter. The resulting device damage is not covered under any warranty.

NOTICE

- The inverter does not support power supplies other than PV strings. The output of the PV string connected to the inverter cannot be grounded. Ensure that the PV module output is well insulated to ground.
- To ensure the optimal power generation of the system, the voltage difference between different MPPT circuits shall be less than 85 V.

Figure 5-12 DC input terminals

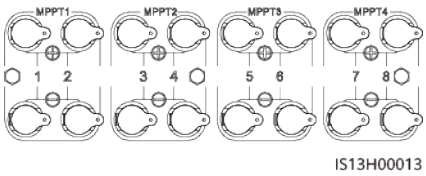

If the DC input terminals are not fully configured with PV strings, the DC input terminals must meet the following requirements:

1. Evenly distribute the DC input power cables on the four MPPTs and preferentially connect them from MPPT 1 to MPPT 4.

 Copyright © Huawei Technologies Co., Ltd.

2. Maximize the number of connected MPPT circuits.

Quantity of PV Strings	Terminal Selection	Quantity of PV Strings	Terminal Selection
1	PV1	2	PV1, PV7
3	PV1, PV3, PV7	4	PV1, PV3, PV5, PV7
5	PV1, PV2, PV3, PV5, PV7	6	PV1, PV2, PV3, PV5, PV7, PV8
7	PV1, PV2, PV3, PV4, PV5, PV7, PV8	8	PV1, PV2, PV3, PV4, PV5, PV6, PV7, PV8

5.5.2 Connecting Cables to Amphenol Helios H4 Terminals

CAUTION

Use the Amphenol Helios H4 positive and negative metal terminals and DC connectors delivered with the inverter. Using incompatible positive and negative metal terminals and DC connectors may result in serious consequences. The resulting device damage is not covered by the product warranty.

NOTICE

- You are advised to use the H4TC0003 (Amphenol) crimping tool and do not use it with the positioning block. Otherwise, the metal terminals may be damaged.
- The H4TW0001 (Amphenol) open-end wrench is recommended.
- Cables with high rigidity, such as armored cables, are not recommended as DC input power cables, because poor contact may be caused by the bending of the cables.
- Before assembling DC connectors, label the cable polarities correctly to ensure correct cable connections.
- After the positive and negative connectors snap into place, try to pull the DC input power cables back to check that they are secure.
- If the inverter is used with optimizers, the number of optimizers in a single PV string cannot exceed 25.
- If PV strings are configured with optimizers, check the cable polarities by referring to the *Smart PV Optimizer Quick Guide*.

Procedure

Step 1 Connect DC power cables.

 Copyright © Huawei Technologies Co., Ltd.

Figure 5-13 Connecting DC power cables

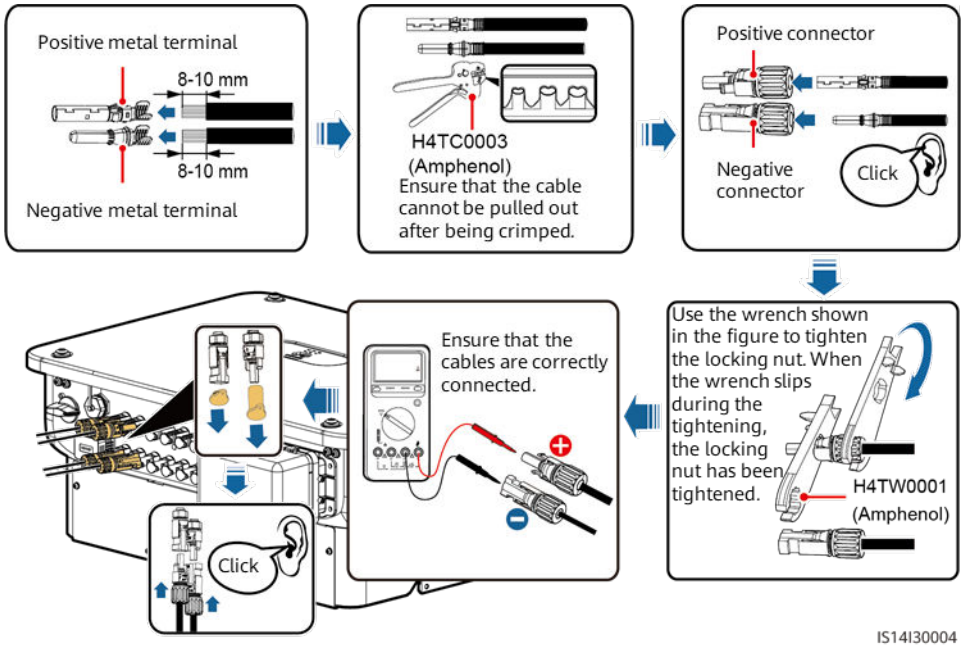

----End

NOTICE

During DC input power cabling, leave at least 50 mm of slack. The axial tension on PV connectors must not exceed 80 N. Radial stress or torque must not be generated on PV connectors.

5.5.3 Connecting Cables to Staubli MC4 Terminals

⚠ CAUTION

Use the Staubli MC4 positive and negative metal terminals and DC connectors delivered with the inverter. Using incompatible positive and negative metal terminals and DC connectors may result in serious consequences. The resulting device damage is not covered by the product warranty.

 Copyright © Huawei Technologies Co., Ltd.

NOTICE

- You are advised to use the PV-CZM-22100 (Staubli) crimping tool and do not use it with the positioning block. Otherwise, the metal terminals may be damaged.
- The PV-MS (Staubli) or PV-MS-HZ (Staubli) open-end wrench is recommended.
- Cables with high rigidity, such as armored cables, are not recommended as DC input power cables, because poor contact may be caused by the bending of the cables.
- Before assembling DC connectors, label the cable polarities correctly to ensure correct cable connections.
- After the positive and negative connectors snap into place, try to pull the DC input power cables back to check that they are secure.
- If the inverter is used with optimizers, the number of optimizers in a single PV string cannot exceed 25.
- If PV strings are configured with optimizers, check the cable polarities by referring to the *Smart PV Optimizer Quick Guide*.

Procedure

Step 1 Connect DC power cables.

Figure 5-14 Connecting DC power cables

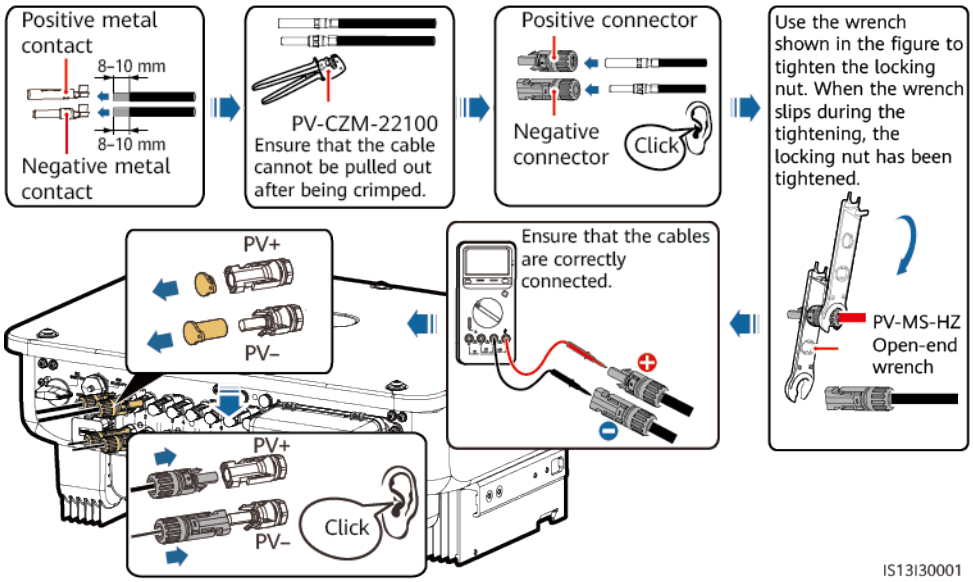

----End

NOTICE

During DC input power cabling, leave at least 50 mm of slack. The axial tension on PV connectors must not exceed 80 N. Radial stress or torque must not be generated on PV connectors.

Copyright © Huawei Technologies Co., Ltd.

5.6 (Optional) Installing the Smart Dongle

Procedure

NOTE

The Smart Dongle is not provided in standard configuration.

- 4G Smart Dongle

NOTICE

- If your Smart Dongle is not equipped with a SIM card, prepare a standard SIM card by yourself (size: 25 mm x 15 mm) with the capacity greater than or equal to 64 KB.
- When installing the SIM card, determine its installation direction based on the silk screen and arrow on the card slot.
- Press the SIM card in place to lock it, indicating that the SIM card is correctly installed.
- When removing the SIM card, push it inward to eject it.
- When reinstalling the enclosure of the Smart Dongle, ensure that the snap-fits click into place.

Figure 5-15 Installing the 4G Smart Dongle (SDongleA-03)

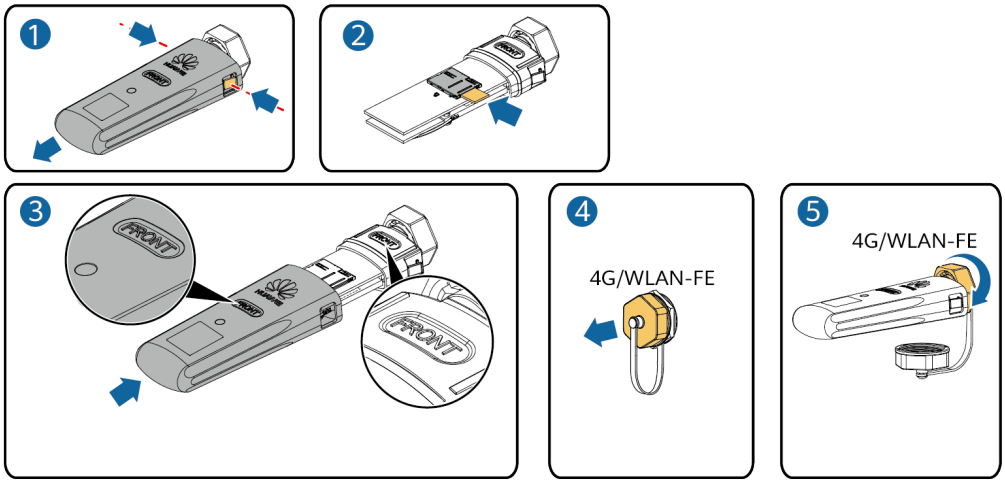

Copyright © Huawei Technologies Co., Ltd.

Figure 5-16 Installing the 4G Smart Dongle (SDongleB-06)

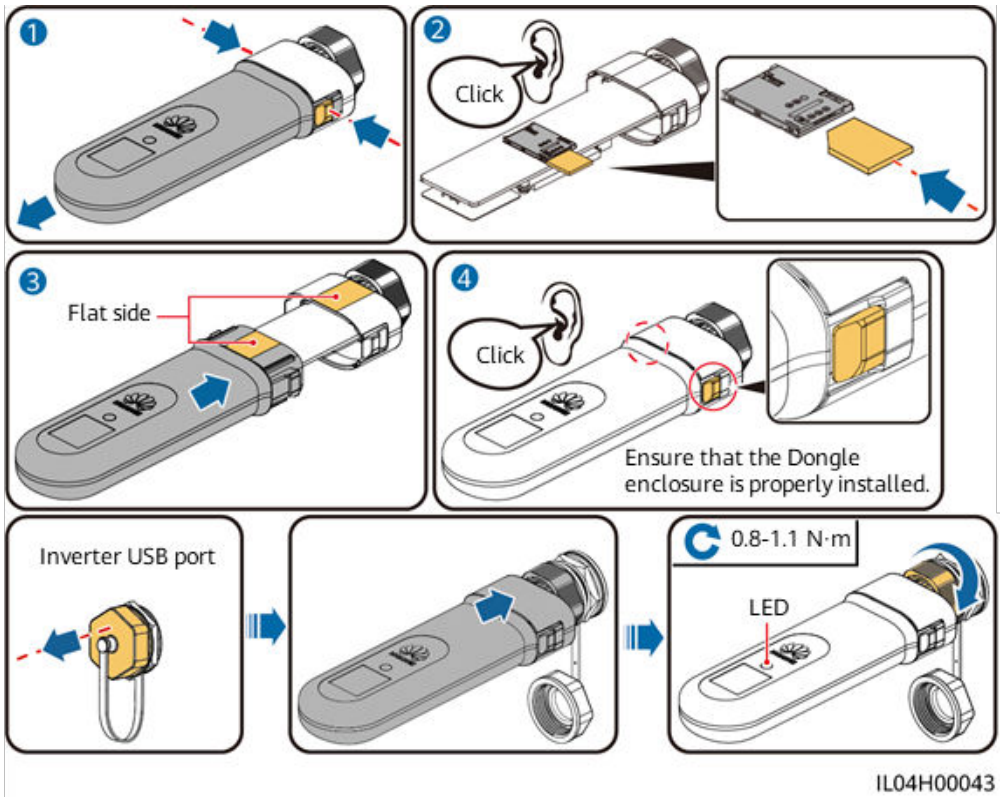

- WLAN-FE Smart Dongle (WLAN communication)

Figure 5-17 Installing the WLAN-FE Smart Dongle (WLAN communication)

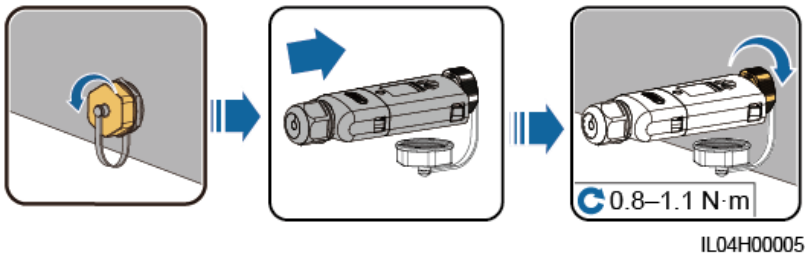

- WLAN-FE Smart Dongle (FE communication)

Figure 5-18 Installing the WLAN-FE Smart Dongle (FE communication)

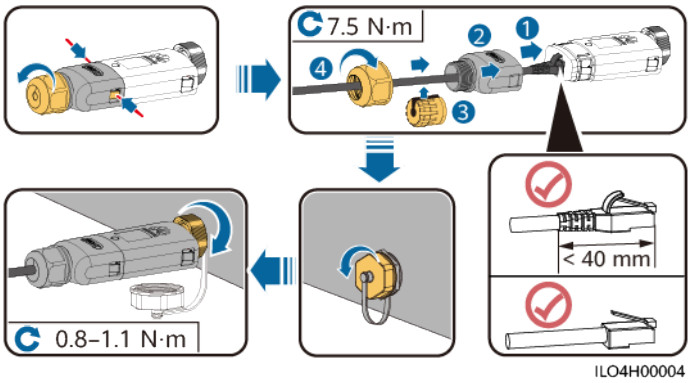

NOTICE

Install the network cable before installing the Smart Dongle on the inverter.

NOTE

- For details about how to use the WLAN-FE Smart Dongle SDongleA-05, see **SDongleA-05 Smart Dongle Quick Guide (WLAN-FE)**. You can scan the QR code below to obtain the document.
- For details about how to use the 4G Smart Dongle SDongleA-03, see **SDongleA-03 Quick Guide (4G)**. You can scan the QR code below to obtain the document.
- For details about how to use the 4G Smart Dongle SDongleB-06, see **SDongleB-06 Smart Dongle Quick Guide (4G)**. You can scan the QR code below to obtain the document.

The quick guide is delivered with the Smart Dongle.

5.7 Connecting Signal Cables

COM Port Pin Definitions

NOTICE

When laying out signal cables, separate them from power cables and keep them away from strong interference sources to prevent communication interruption.

 Copyright © Huawei Technologies Co., Ltd.

Figure 5-19 Pin definitions

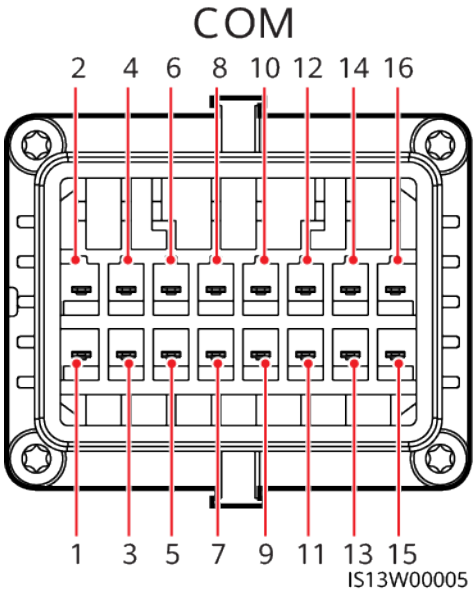

Pin	Definition	Function	Description	Pin	Definition	Function	Description
1	485A1_1	RS485 differential signal +	For inverter cascading or connecting to the RS485 signal port of a SmartLogger	2	485A1_2	RS485 differential signal +	For inverter cascading or connecting to the RS485 signal port of a SmartLogger
3	485B1_1	RS485 differential signal –		4	485B1_2	RS485 differential signal –	
5	PE	Shield layer grounding	-	6	PE	Shield layer grounding	-
7	485A2	RS485 differential signal +	For connecting to the RS485 signal port for controlling the power meter at the grid connection point.	8	DIN1	Dry contact for grid scheduling	-
9	485B2	RS485 differential signal –		10	DIN2		
11	-	-	-	12	DIN3		
13	GND	GND	-	14	DIN4		

 Copyright © Huawei Technologies Co., Ltd.

Pin	Definition	Function	Description	Pin	Definition	Function	Description
15	DIN5	Rapid shutdown/NS protection	For the rapid shutdown DI signal or connecting to the signal cable of an NS protection device	16	GND		

Scenario Where No Signal Cable Is Connected

NOTICE

If no signal cable is connected to the inverter, use a waterproof plug to seal the cable hole of the signal cable connector and connect the signal cable connector to the communications port on the inverter for better waterproof performance.

Figure 5-20 Connecting the signal cable connector

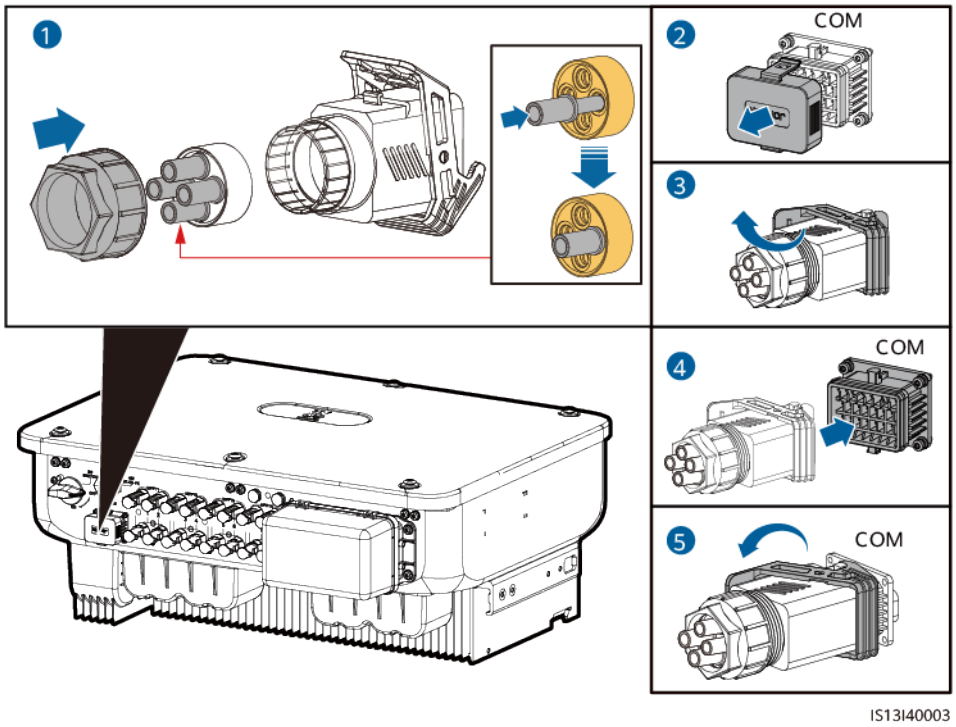

5.7.1 Communication Modes

RS485 communication

- Smart Dongle networking

Figure 5-21 Smart Dongle networking

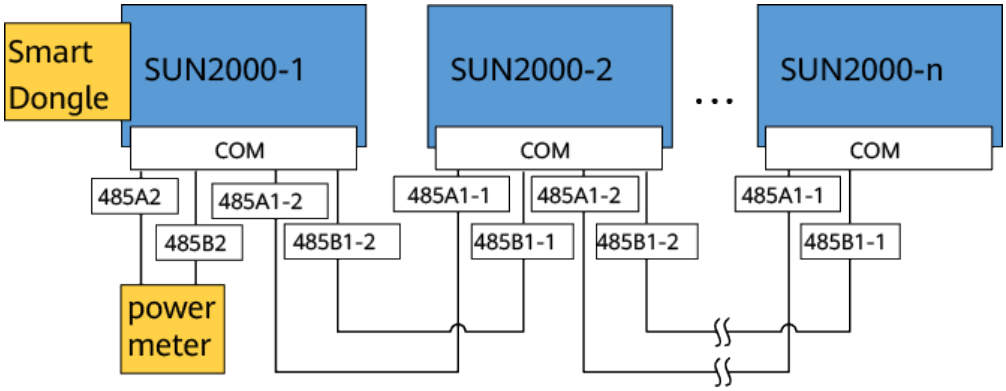

NOTE

If the inverter is connected to the Smart Dongle, it cannot be connected to the SmartLogger.

- SmartLogger networking

Figure 5-22 SmartLogger networking

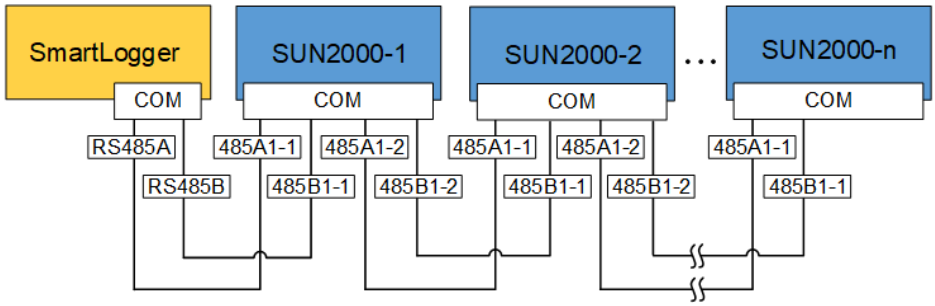

NOTE

- If the inverter is connected to the SmartLogger, it cannot be connected to the Smart Dongle.
- You are advised to connect fewer than 30 devices to each RS485 route.

MBUS Communication

The MBUS technology transmits communication signals over power cables through a communications board.

 Copyright © Huawei Technologies Co., Ltd.

NOTE

- You can determine whether the MBUS is supported based on the nameplate on the device.
- Inverters manufactured after July 20, 2022 do not support AC MBUS.
- The built-in MBUS module in the inverter does not need to be connected with cables.
- In utility-scale scenarios, an isolation transformer must be connected between the inverter and loads.
- C&I scenarios are supported only in China.

Figure 5-23 MBUS communication (utility-scale scenario)

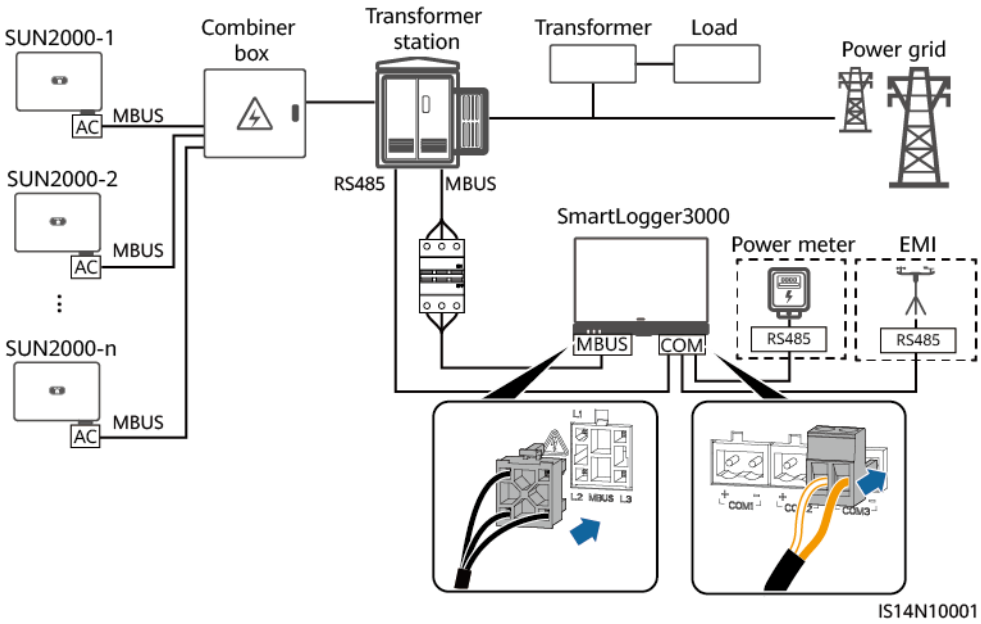

Figure 5-24 MBUS communication (C&I scenario in China)

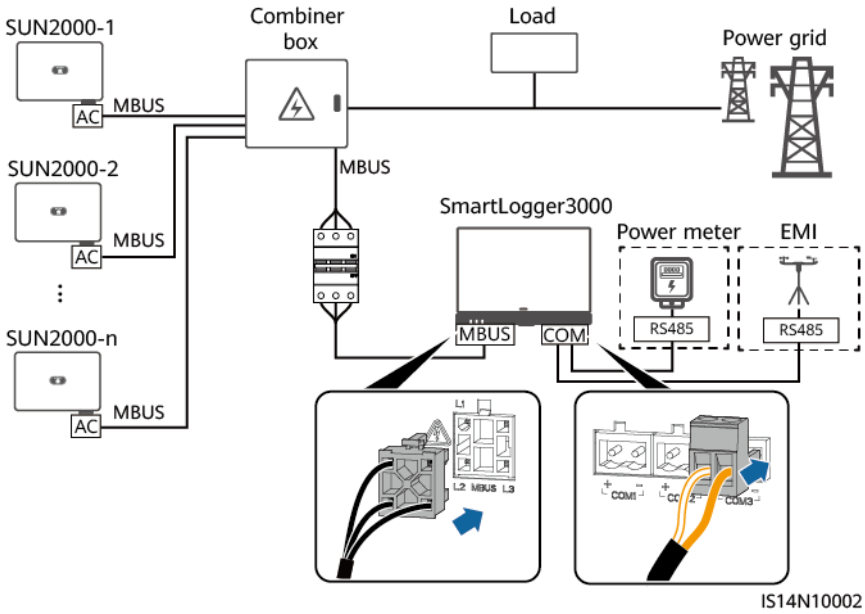

5.7.2 (Optional) Connecting the RS485 Communications Cable to the SUN2000

Procedure

Step 1 Connect the signal cable to the signal cable connector.

Figure 5-25 Connecting the cable

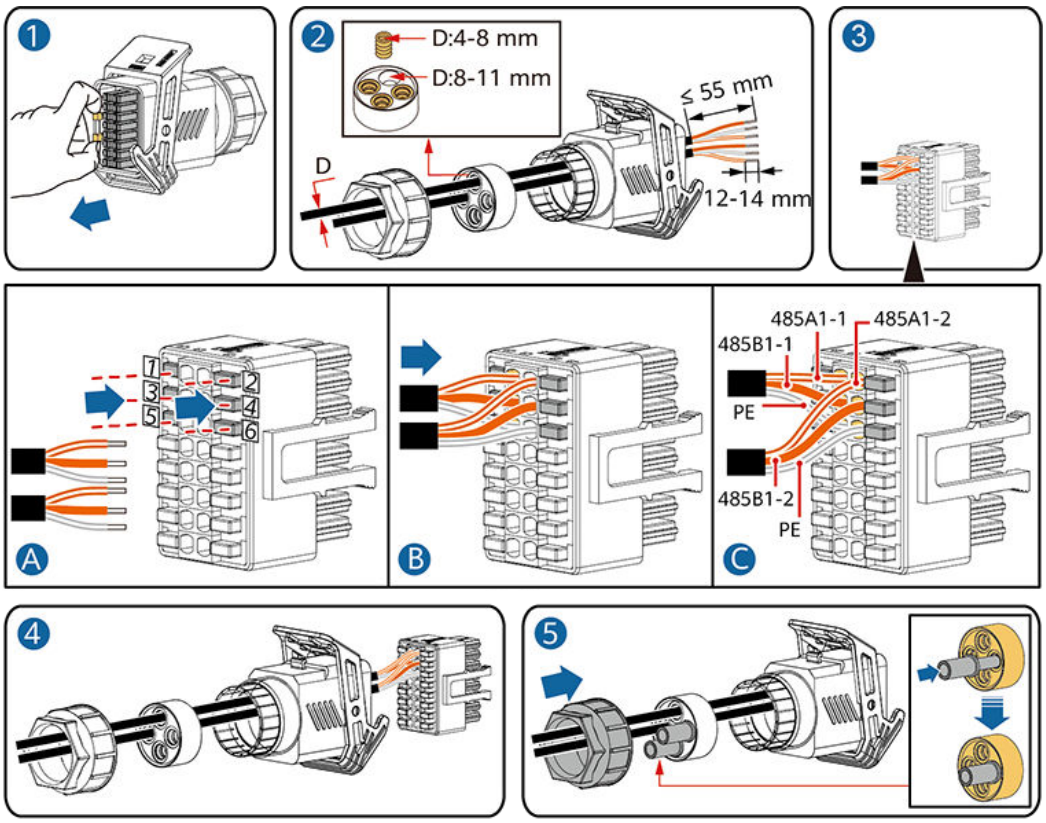

Step 2 Connect the signal cable connector to the COM port.

Figure 5-26 Securing the signal cable connector

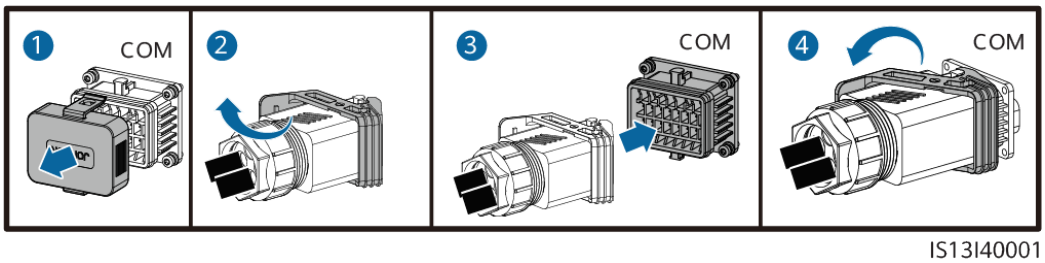

----End

Copyright © Huawei Technologies Co., Ltd.

5.7.3 (Optional) Connecting the RS485 Communications Cable to the Power Meter

Procedure

Step 1 Connect the signal cable to the signal cable connector.

Figure 5-27 Installing the cable

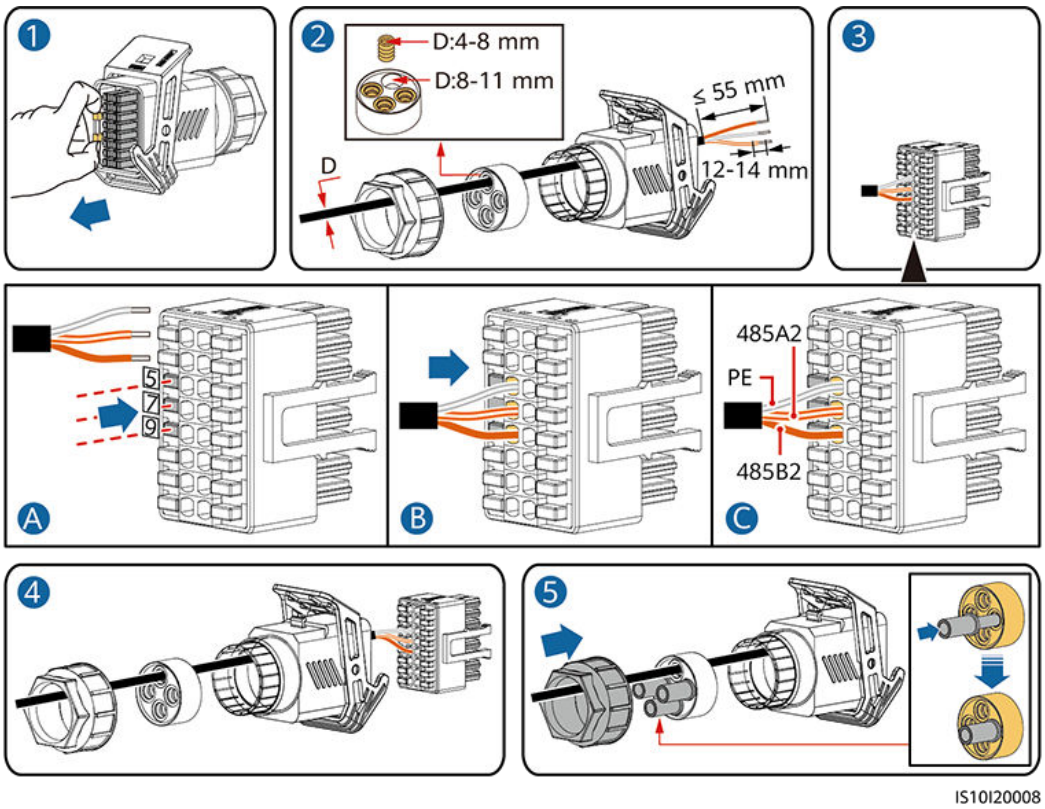

Step 2 Connect the signal cable connector to the COM port.

Figure 5-28 Securing the signal cable connector

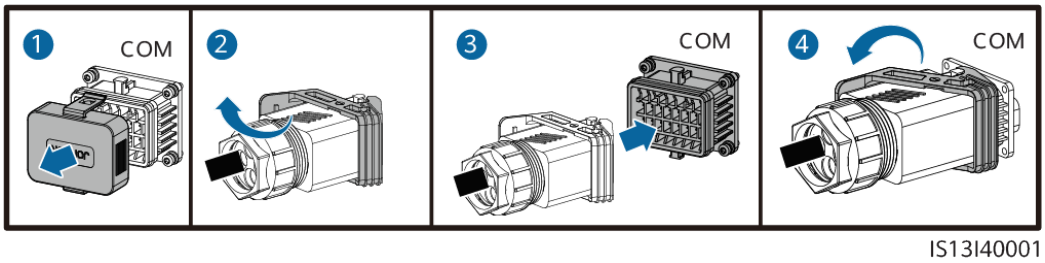

----End

Copyright © Huawei Technologies Co., Ltd.

5.7.4 (Optional) Connecting the Power Grid Scheduling Signal Cable

Procedure

Step 1 Connect the signal cable to the signal cable connector.

Figure 5-29 Connecting the cable

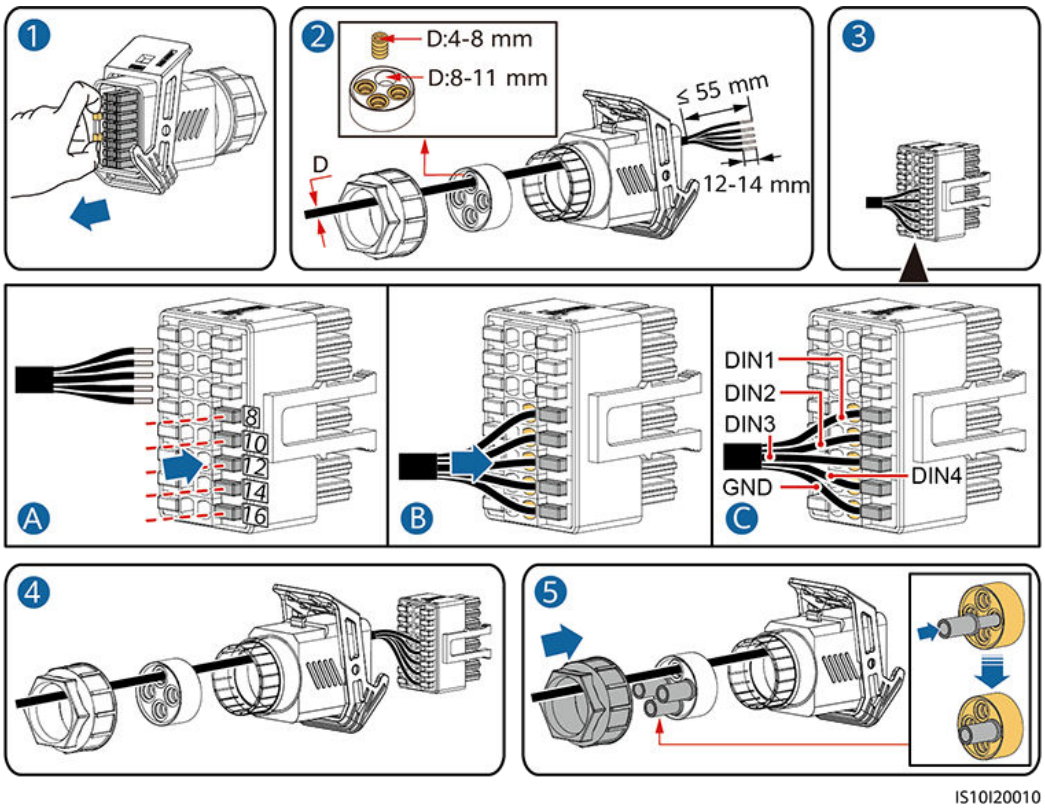

Step 2 Connect the signal cable connector to the COM port.

Figure 5-30 Securing the signal cable connector

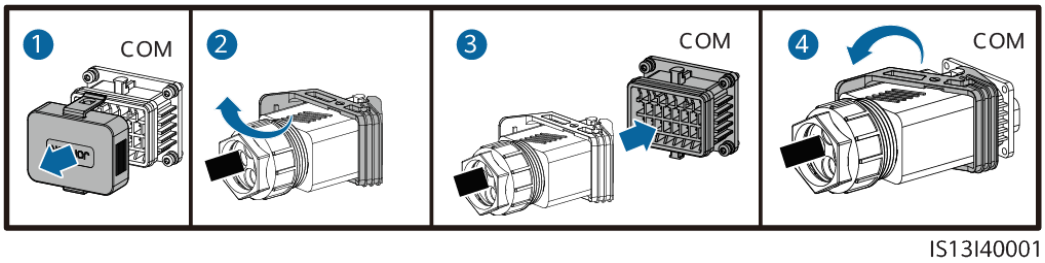

----End

Copyright © Huawei Technologies Co., Ltd.

5.7.5 (Optional) Connecting the Rapid Shutdown Signal Cable

Procedure

Step 1 Connect the signal cable to the signal cable connector.

Figure 5-31 Installing the cable

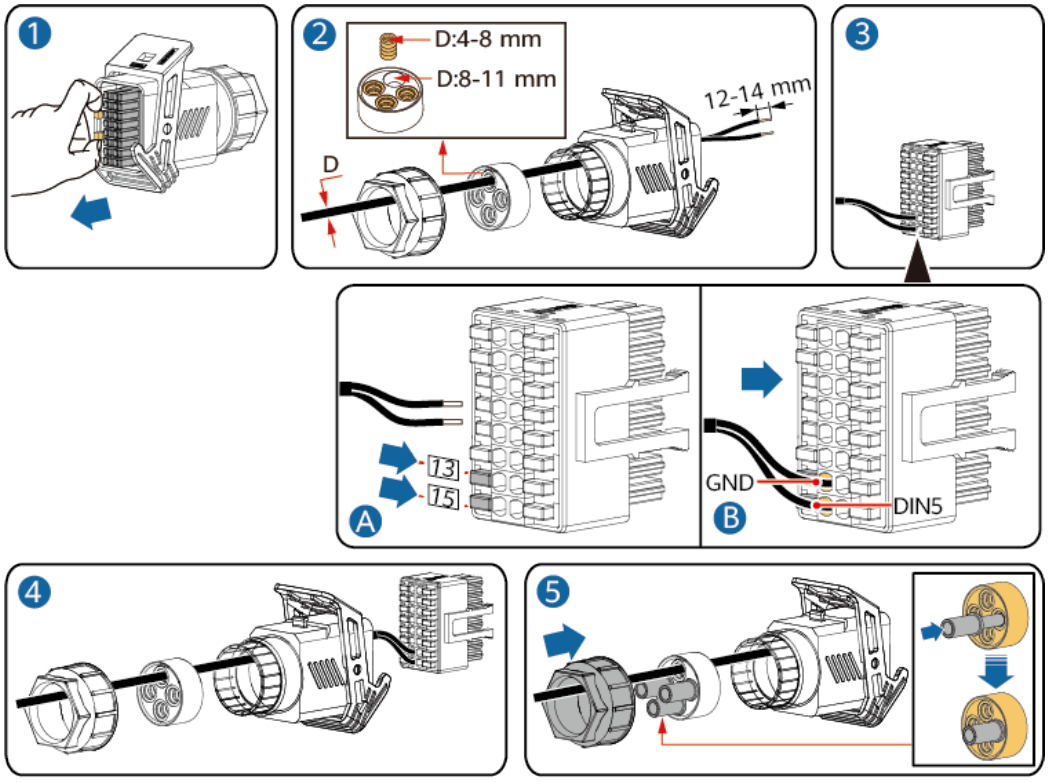

Step 2 Connect the signal cable connector to the COM port.

Figure 5-32 Securing the signal cable connector

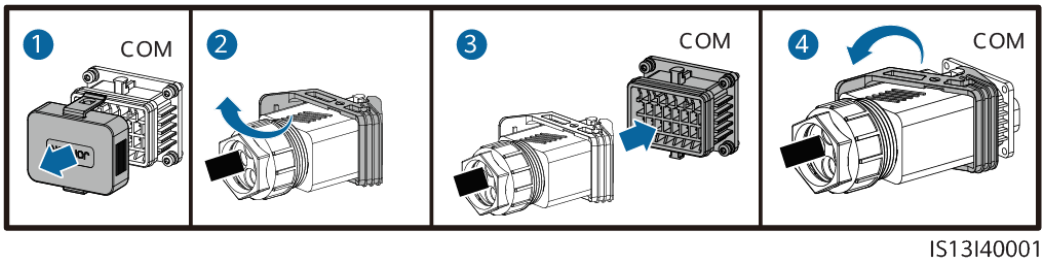

----End

Copyright © Huawei Technologies Co., Ltd.

6 Commissioning

DANGER

- Wear personal protective equipment and use dedicated insulated tools to avoid electric shocks or short circuits.

6.1 Checking Before Power-On

Table 6-1 Checklist

No.	Check Item	Acceptance Criteria
1	SUN2000 installation	The SUN2000 is installed correctly and securely.
2	Smart Dongle	The Smart Dongle is installed correctly and securely.
3	Cable routing	The cables are routed properly as required by the customer.
4	Cable ties	Cable ties are evenly distributed and no burr exists.
5	Reliable grounding	The PE cable is connected correctly and securely.
6	Switch	DC switches and all the switches connecting to the SUN2000 are OFF.
7	Cable connection	The AC output power cable, and DC input power cables are connected correctly and securely.
8	Unused terminals and ports	Unused terminals and ports are locked by watertight caps.

Copyright © Huawei Technologies Co., Ltd.

No.	Check Item	Acceptance Criteria
9	Installation environment	The installation space is proper, and the installation environment is clean and tidy.

6.2 System Power-On

Prerequisites

DANGER

- Wear personal protective equipment and use dedicated insulated tools to avoid electric shocks or short circuits.

NOTICE

- Before turning on the AC switch between the inverter and the power grid, check that the AC voltage is within the specified range using a multimeter.
- If the DC power supply is connected but the AC power supply is disconnected, the inverter will report a **Grid Loss** alarm. The inverter can start properly only after the power grid recovers.

Procedure

Step 1 Turn on the AC switch between the inverter and the power grid.

Step 2 (Optional) Remove the locking screw next to the DC SWITCH.

Figure 6-1 Removing the DC SWITCH locking screw

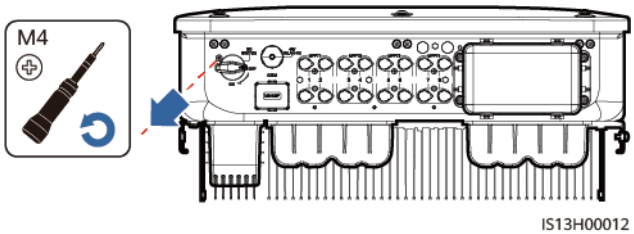

Step 3 Turn on the **DC SWITCH** at the bottom of the inverter.

Step 4 Observe the LED indicators to check the operating status of the inverter.

 Copyright © Huawei Technologies Co., Ltd.

Table 6-2 LED indicator description

Category	Status		Description
Running indicator 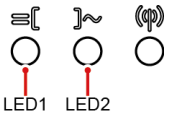	**LED1**	**LED2**	–
	Steady green	Steady green	The inverter is running in on-grid state.
	Blinking green slowly (on for 1s and off for 1s)	Off	The DC is on and the AC is off.
	Blinking green slowly (on for 1s and off for 1s)	Blinking green slowly (on for 1s and off for 1s)	Both the DC and AC are on, and the inverter is off-grid.
	Off	Blinking green slowly	The DC is off and the AC is on.
	Off	Off	Both the DC and AC are off.
	Blinking red fast (on for 0.2s and off for 0.2s)	–	There is a DC environmental alarm.
	–	Blinking red fast (on for 0.2s and off for 0.2s)	There is an AC environmental alarm.
	Steady red	Steady red	A fault exists.
Communication indicator 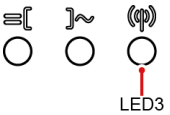	**LED3**		–
	Blinking green fast (on for 0.2s and off for 0.2s)		Communication is in progress.
	Blinking green slowly (on for 1s and off for 1s)		A mobile phone is connected to the inverter.
	Off		There is no communication.
Note: If LED1, LED2, and LED3 are steady red, the inverter is faulty and needs to be replaced.			

----End

 Copyright © Huawei Technologies Co., Ltd.

7 Human-Machine Interaction

NOTE

- The FusionSolar app is recommended if the inverter connects to the FusionSolar Smart PV Management System. In areas where the FusionSolar app is unavailable or a third-party management system is used, only the SUN2000 app can be used for commissioning.
- Access Huawei AppGallery, search for **FusionSolar** or **SUN2000**, and download the app installation package. You can also scan a QR code below to download the app. You are advised to use a browser to scan a QR code.

FusionSolar | SUN2000 (Android) | SUN2000 (iOS)

 Copyright © Huawei Technologies Co., Ltd.

NOTICE

- The screenshots are for reference only.
- The initial password for connecting to the inverter WLAN can be obtained from the label on the side of the inverter.
- Set the password upon the first login. You are advised to change the password periodically. After changing the password, remember the new password to ensure account security. Your password might be stolen or cracked if it is left unchanged for extended periods. If a password is lost, devices cannot be accessed. In these cases, the Company shall not be liable for any loss caused to the plant.
- Set the correct grid code based on the application area and scenario of the inverter.
- The grid-connection voltage and frequency of inverters in China are set before delivery according to NB/T 32004 or the latest Chinese standard. If the inverter fails to connect to the power grid because the power grid voltage is close to or higher than the voltage required by Chinese laws and regulations, you can select another voltage level based on the voltage at the grid connection point after obtaining permission from the local power operator.
- If the power grid voltage exceeds the upper threshold, the service life of loads on the grid side may be affected, or energy yield loss may occur. In this case, the Company shall not be liable for any consequences.

7.1 Scenario in Which SUN2000s Are Connected to the FusionSolar Smart PV Management System

7.1.1 (Optional) Registering an Installer Account

NOTE

- If you have an installer account, skip this step.
- You can register an account only using a mobile phone only in China.
- The mobile number or email address used for registration is the user name for logging in to the FusionSolar app.

Create the first installer account and create a domain named after the company name.

 Copyright © Huawei Technologies Co., Ltd.

Figure 7-1 Creating the first installer account

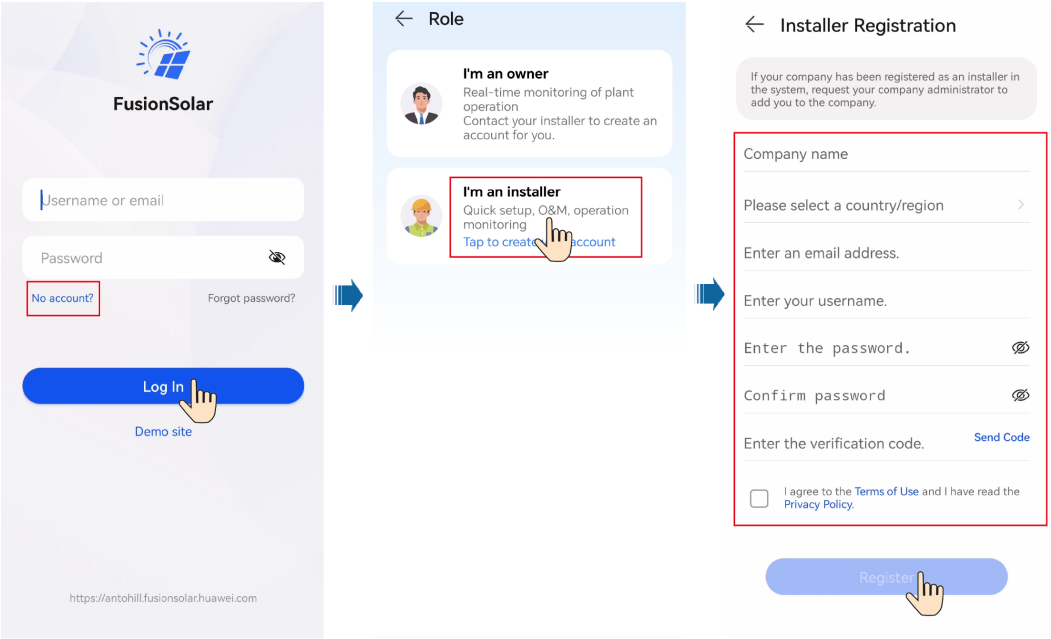

NOTICE

To create multiple installer accounts for a company, log in to the FusionSolar app and tap **Add User** to create an installer account.

Figure 7-2 Creating multiple installer accounts for the same company

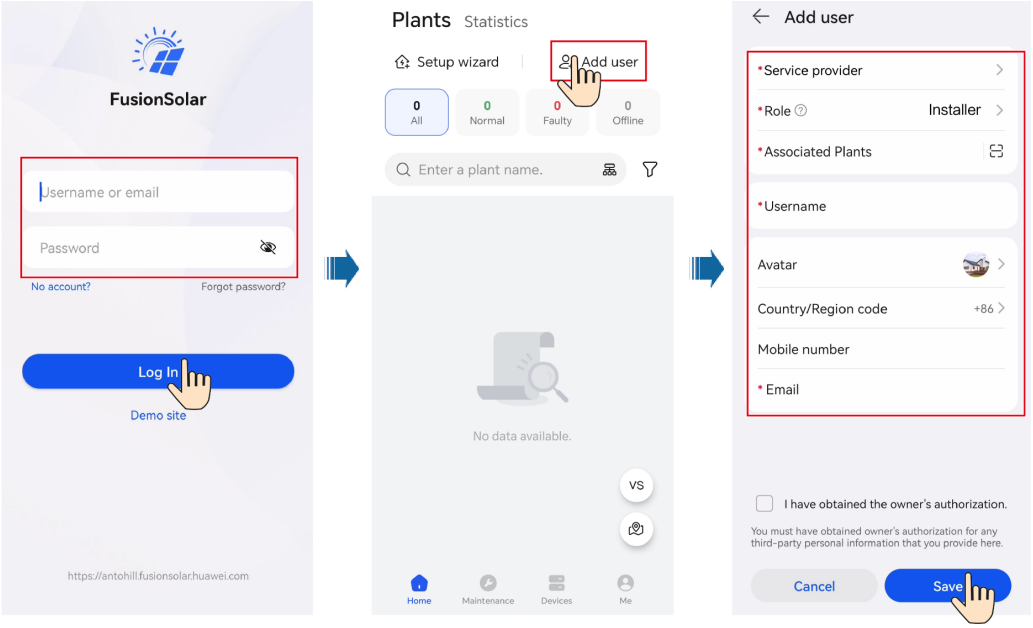

Copyright © Huawei Technologies Co., Ltd.

7.1.2 Creating a PV Plant and a User

Figure 7-3 Creating a PV plant and a user

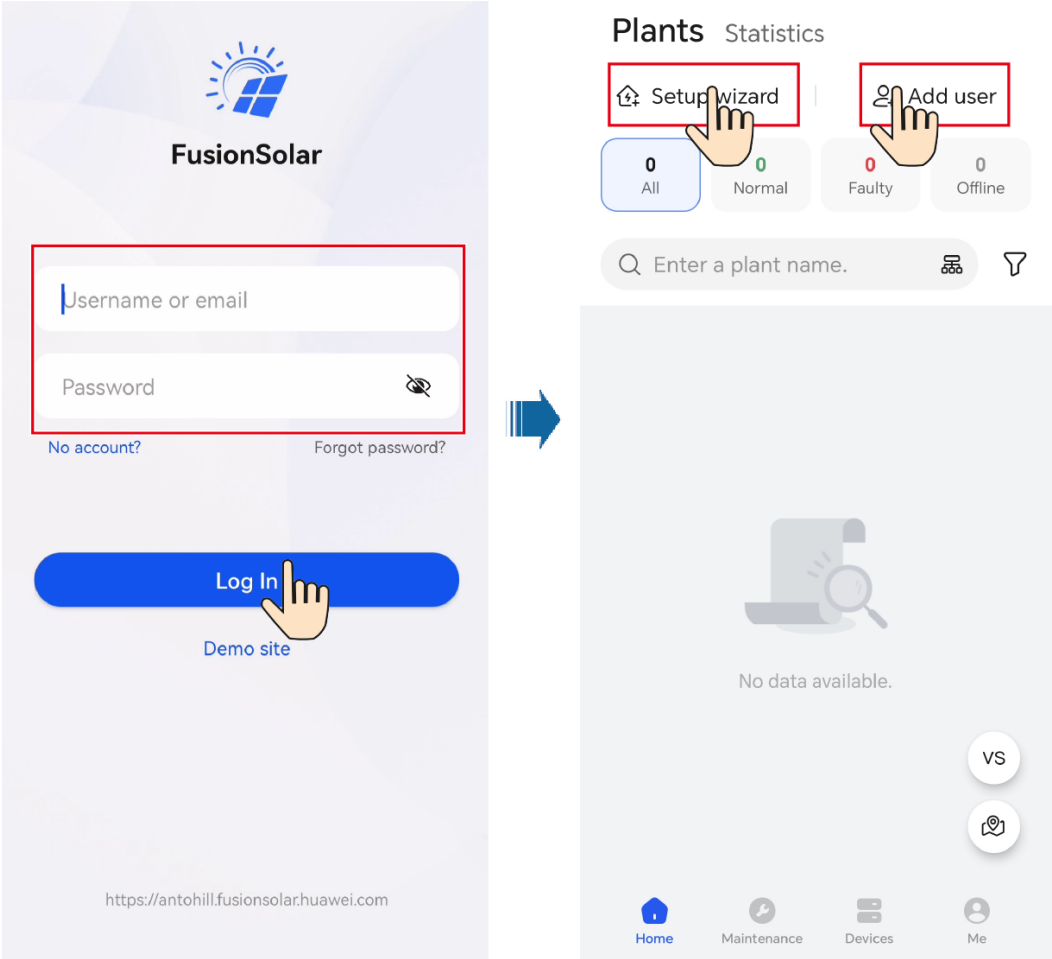

NOTE

- In the quick settings for SUN2000-(29.9KTL/36KTL/40KTL)-M3, the grid code is N/A by default (automatic startup is not supported). Set the grid code based on the area where the PV plant is located.
- Before the equipment is put into operation for the first time, ensure that the parameters are set correctly by professional personnel. Incorrect parameter settings may result in noncompliance with local grid connection requirements and affect the normal operations of the equipment.
- For details about how to use the site deployment wizard, see ***FusionSolar App Quick Guide***.

Copyright © Huawei Technologies Co., Ltd.

7.1.3 SmartLogger Networking

For details, see **PV Plants Connecting to Huawei Hosting Cloud Quick Guide (Inverters + SmartLogger3000)**, **PV Plants Connecting to SmartPVMS Quick Guide (Inverters + SmartLogger3000 + RS485 Networking)**, or **PV Plants Connecting to SmartPVMS Quick Guide (Inverters + SmartLogger3000 + MBUS Networking)**.

NOTE

Inverters manufactured after July 20, 2022 do not support AC MBUS. You can determine whether the MBUS is supported based on the nameplate on the device.

7.2 Scenario in Which Inverters Connect to Other Management Systems

Step 1 Open the SUN2000 app, scan the QR code of the inverter or manually connect to the WLAN hotspot to access the device commissioning screen.

Step 2 Select **Installer** and enter the login password.

Step 3 Tap **Log in** to access the quick settings screen or the inverter home screen.

Figure 7-4 Logging in to the app

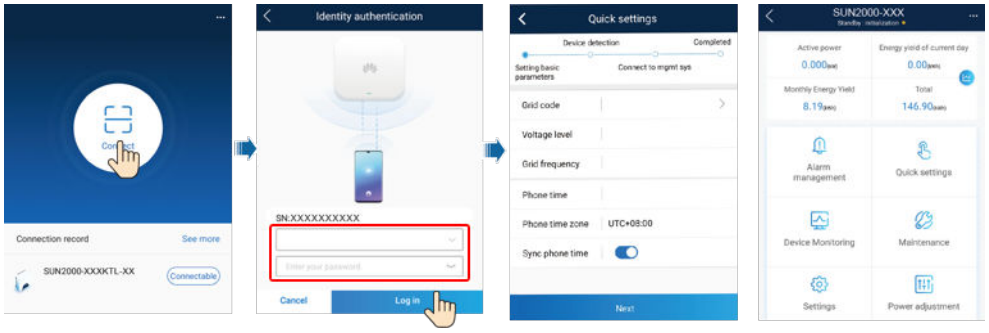

----End

7.3 Energy Control

7.3.1 Grid-tied Point Control

Function

The output power of the PV power system can be limited or reduced to ensure that the output power is within the specified range.

Procedure

Step 1 On the home screen, choose **Power adjustment** > **Grid-tied point control**.

Figure 7-5 Grid-tied point control

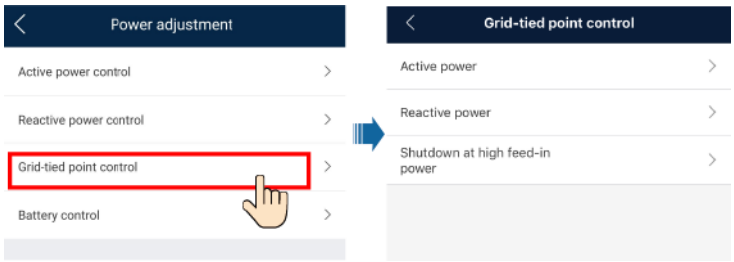

Table 7-1 Grid-tied point control

Parameter			Description
Active power	Unlimited	-	If this parameter is set to **Unlimited**, the output power of the inverter is not limited and the inverter can connect to the power grid at the rated power.
	Grid connection with zero power	Closed-loop controller	• If multiple inverters are cascaded, set this parameter to **SDongle/SmartLogger**. • If there is only one inverter, set this parameter to **Inverter**.
		Limitation mode	• **Total power** indicates export limitation of the total power at the grid-tied point. (When a single-phase power meter is connected, only **Total power** can be selected. When a three-phase meter is connected in three-phase three-wire mode, only **Total power** can be selected.) • **Single-phase power** indicates export limitation of the power in each phase at the grid-tied point. **Single-phase power** can be selected only if a three-phase meter is connected in three-phase four-wire mode.
		Power adjustment period	Specifies the shortest interval for a single export limitation adjustment.
		Power control hysteresis	Specifies the deadband for adjusting the inverter output power. If the power fluctuates within the power control hysteresis, the power is not adjusted.
		Active power output limit for fail-safe	Specifies the derating value of the inverter active power by percentage. If the Smart Dongle does not detect any power meter data or the communication between the Smart Dongle and the inverter is disconnected, the Smart Dongle delivers the derating value of the inverter active power by percentage.

 Copyright © Huawei Technologies Co., Ltd.

Parameter			Description
		Communication disconnection fail-safe	In the inverter export limitation scenario, if this parameter is set to **Enable**, the inverter will derate according to the active power derating percentage when the communication between the inverter and the Smart Dongle is disconnected for a period longer than **Communication disconnection detection time**.
		Communication disconnection detection time	Specifies the fail-safe detection time in case of disconnection between the inverter and the Smart Dongle. This parameter is displayed when **Communication disconnection fail-safe** is set to **Enable**.
	Grid connection with limited power (kW)	Closed-loop controller	• If multiple inverters are cascaded, set this parameter to **SDongle/SmartLogger**. • If there is only one inverter, set this parameter to **Inverter**.
		Limitation mode	• **Total power** indicates export limitation of the total power at the grid-tied point. (When a single-phase power meter is connected, only **Total power** can be selected. When a three-phase meter is connected in three-phase three-wire mode, only **Total power** can be selected.) • **Single-phase power** indicates export limitation of the power in each phase at the grid-tied point. **Single-phase power** can be selected only if a three-phase meter is connected in three-phase four-wire mode.
		Maximum grid feed-in power	Specifies the maximum active power transmitted from the grid-tied point to the power grid.
		Power adjustment period	Specifies the shortest interval for a single export limitation adjustment.
		Power control hysteresis	Specifies the deadband for adjusting the inverter output power. If the power fluctuates within the power control hysteresis, the power is not adjusted.
		Active power output limit for fail-safe	Specifies the derating value of the inverter active power by percentage. If the Smart Dongle does not detect any power meter data or the communication between the Smart Dongle and the inverter is disconnected, the Smart Dongle delivers the derating value of the inverter active power by percentage.

 Copyright © Huawei Technologies Co., Ltd.

Parameter			Description
		Communication disconnection fail-safe	In the inverter export limitation scenario, if this parameter is set to **Enable**, the inverter will derate according to the active power derating percentage when the communication between the inverter and the Smart Dongle is disconnected for a period longer than **Communication disconnection detection time**.
		Communication disconnection detection time	Specifies the fail-safe detection time in case of disconnection between the inverter and the Smart Dongle. This parameter is displayed when **Communication disconnection fail-safe** is set to **Enable**.
	Grid connection with limited power (%)	Closed-loop controller	• If multiple inverters are cascaded, set this parameter to **SDongle/SmartLogger**. • If there is only one inverter, set this parameter to **Inverter**.
		Limitation mode	• **Total power** indicates export limitation of the total power at the grid-tied point. (When a single-phase power meter is connected, only **Total power** can be selected. When a three-phase meter is connected in three-phase three-wire mode, only **Total power** can be selected.) • **Single-phase power** indicates export limitation of the power in each phase at the grid-tied point. **Single-phase power** can be selected only if a three-phase meter is connected in three-phase four-wire mode.
		PV plant capacity	Specifies the total maximum active power in the inverter cascading scenario.
		Maximum grid feed-in power	Specifies the percentage of the maximum active power at the grid-tied point to the PV plant capacity.
		Power adjustment period	Specifies the shortest interval for a single export limitation adjustment.
		Power control hysteresis	Specifies the deadband for adjusting the inverter output power. If the power fluctuates within the power control hysteresis, the power is not adjusted.
		Active power output limit for fail-safe	Specifies the derating value of the inverter active power by percentage. If the Smart Dongle does not detect any power meter data or the communication between the Smart Dongle and the inverter is disconnected, the Smart Dongle delivers the derating value of the inverter active power by percentage.

 Copyright © Huawei Technologies Co., Ltd.

Parameter			Description
		Communication disconnection fail-safe	In the inverter export limitation scenario, if this parameter is set to **Enable**, the inverter will derate according to the active power derating percentage when the communication between the inverter and the Smart Dongle is disconnected for a period longer than **Communication disconnection detection time**.
		Communication disconnection detection time	Specifies the fail-safe detection time in case of disconnection between the inverter and the Smart Dongle. This parameter is displayed when **Communication disconnection fail-safe** is set to **Enable**.
Shutdown at high feed-in power[a]	Shutdown at high feed-in power		● The default value is **Disable**. ● If this parameter is set to **Enable**, the inverter shuts down for protection when the power at the grid-tied point exceeds the threshold and remains in this condition for the specified time threshold.
	Upper feed-in power threshold for inverter shutdown (kW)		The default value is **0**. This parameter specifies the power threshold of the grid-tied point for triggering inverter shutdown.
	High feed-in power duration threshold for triggering inverter shutdown (s)		The default value is **20**. This parameter specifies the duration threshold of high feed-in power for triggering inverter shutdown. ● When **High feed-in power duration threshold for triggering inverter shutdown** is set to **5**, **Shutdown at high feed-in power** takes precedence. ● When **High feed-in power duration threshold for triggering inverter shutdown** is set to **20**, **Grid connection with limited power** takes precedence (when **Active power control** is set to **Grid connection with limited power**).
Note a: This parameter is supported only for the AS4777 or G99-TYPEA-LV grid code.			

----End

7.3.2 Setting Feed-in at Limited Current

Function

The output current of the PV power system can be limited or reduced to ensure that the output current is within the specified range.

This function applies only to the commercial and industrial (C&I) scenarios in the UK where the grid code is G99-TYPEA-LV, G99-TYPEB-LV, G99-TYPEB-HV, G99-TYPEB-HV-MV480, or G99-TYPEA-HV. The SUN2000 app version must be later than 6.24.00.563.

 Copyright © Huawei Technologies Co., Ltd.

7.3.2.1 Connecting the App to the Inverter or Smart Dongle

NOTICE

If a single inverter is connected to the power grid, a Smart Dongle must be used for networking.

Procedure

Step 1 On the home screen, choose **Power adjustment** > **Feed-in at limited current**.

Figure 7-6 Feed-in at limited current

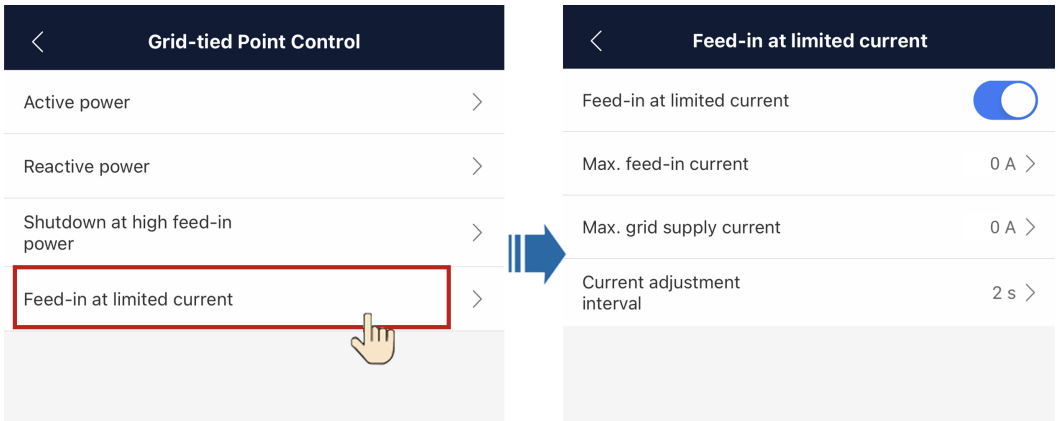

Table 7-2 Feed-in at limited current

Parameter		Description
Feed-in at limited current[a]	Feed-in at limited current	The default value is **Disable**. • If this parameter is set to **Disable**, feed-in at limited current will be unavailable. • If this parameter is set to **Enable**, feed-in at limited current will be available.
	Max. feed-in current[b]	Value range: [0, 30000 A] • Due to external disturbances, the feed-in current may exceed the specified value by 2%. In this case, the inverter will adjust the current to a value within the range limit. • After the user changes the maximum feed-in current, the inverter will adjust the current to a value within the range limit.
	Max. grid supply current	Value range: [0, 30000 A] If the grid supply current exceeds the specified value by 2%, the inverter will adjust the current to a value within the range limit.

 Copyright © Huawei Technologies Co., Ltd.

Parameter		Description
	Current adjustment interval	Value range: [1, 5s] You are advised to keep the default value. A larger value indicates a lower current adjustment speed. If this parameter is set to 2s and the current at the grid connection point exceeds the threshold, the inverter adjusts the current every 2s.
Note a: If the inverter shuts down because the feed-in current adjustment is not complete within the specified time, the user needs to manually start the inverter. By default, the number of manual startups cannot exceed three within 30 days. If this limit is reached, it is not allowed to manually start the inverter again. Note b: If the maximum feed-in current is not adjusted to a value within the range limit within 15s, the inverter will shut down and report a **Power Control Abnormal at Grid Connection Point** alarm.		

----End

7.3.2.2 Scenario Where the App Connects to the SmartLogger

NOTICE

If multiple inverters are cascaded, the SmartLogger must be used.

Procedure

Step 1 On the home screen, choose **Power adjustment > Feed-in at limited current**.

Figure 7-7 Feed-in at limited current

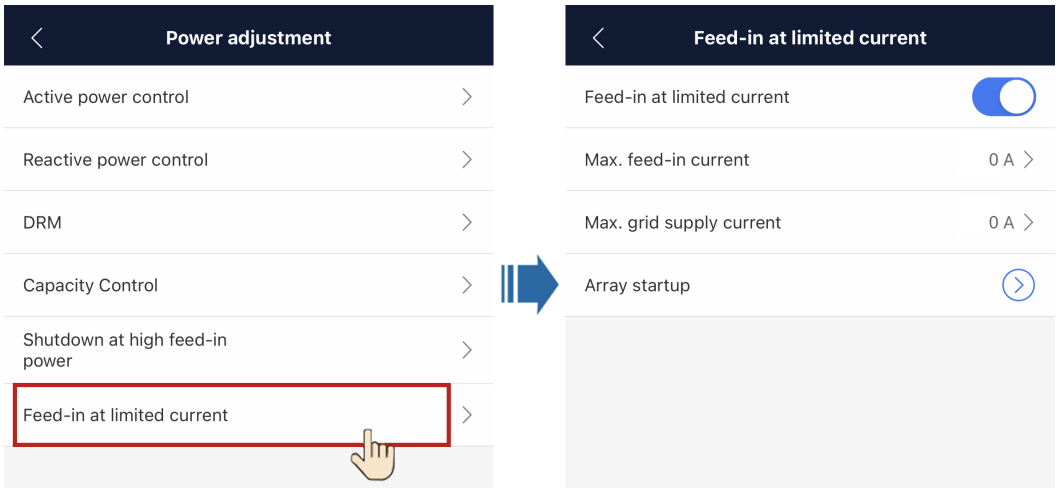

Copyright © Huawei Technologies Co., Ltd.

Table 7-3 Feed-in at limited current

Parameter		Description
Feed-in at limited current[a]	Feed-in at limited current	The default value is **Disable**. ● If this parameter is set to **Disable**, feed-in at limited current will be unavailable. ● If this parameter is set to **Enable**, feed-in at limited current will be available.
	Max. feed-in current[b]	Value range: [0, 30000 A] ● Due to external disturbances, the feed-in current may exceed the specified value by 2%. In this case, the inverter will adjust the current to a value within the range limit. ● After the user changes the maximum feed-in current, the inverter will adjust the current to a value within the range limit.
	Max. grid supply current	Value range: [0, 30000 A] If the grid supply current exceeds the specified value by 2%, the inverter will adjust the current to a value within the range limit.
	Array startup	If devices in the array shut down because the feed-in current at the grid connection point is not complete, you can start all inverters in the array by one click.
Note a: If the inverter shuts down because the feed-in current adjustment is not complete within the specified time, the user needs to manually start the inverter. By default, the user needs to wait for at least 4 hours before starting the inverter. Note b: If the maximum feed-in current is not adjusted to a value within the range limit within 15s, the inverter will shut down and report a **Power Control Abnormal at Grid Connection Point** alarm.		

----End

7.3.3 Apparent Power Control on the Inverter Output Side

On the home screen, tap **Settings** > **Power adjustment** and set inverter parameters.

Figure 7-8 Apparent power control

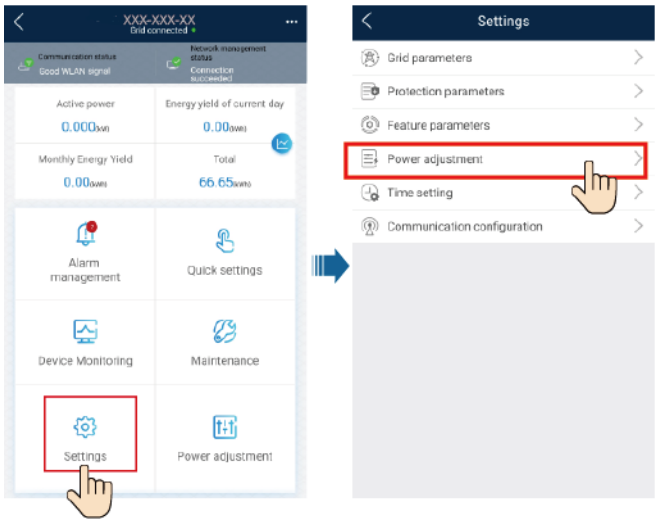

Table 7-4 Apparent power control

Parameter	Description	Value Range
Maximum apparent power (kVA)	Specifies the output upper threshold for the maximum apparent power to adapt to the capacity requirements of standard and customized solar inverters.	[Maximum active power, S_{max}]
Highest active power (kW)	Specifies the output upper threshold for the maximum active power to adapt to different market requirements.	[0.1, P_{max}]

NOTE

The lower threshold for the maximum apparent power is the maximum active power. To lower the maximum apparent power, lower the maximum active power first.

 Copyright © Huawei Technologies Co., Ltd.

8 Maintenance

DANGER

- Wear personal protective equipment and use dedicated insulated tools to avoid electric shocks or short circuits.

WARNING

- Before performing maintenance, power off the equipment, follow the instructions on the delayed discharge label, and wait for a period of time as specified to ensure that the equipment is not energized.

8.1 System Power-Off

Precautions

WARNING

After the system is powered off, the inverter is still energized and hot, which may cause electric shocks or burns. Therefore, wait for at least 5 minutes after system power-off and put on protective gloves before working on the inverter.

Procedure

Step 1 Send a shutdown command on the app.

Step 2 Turn off the AC switch between the inverter and the power grid.

Step 3 Set the **DC SWITCH** at the bottom of the inverter to **OFF**.

Step 4 (Optional) Install the DC switch locking screw.

 Copyright © Huawei Technologies Co., Ltd.

Figure 8-1 Installing the DC switch locking screw

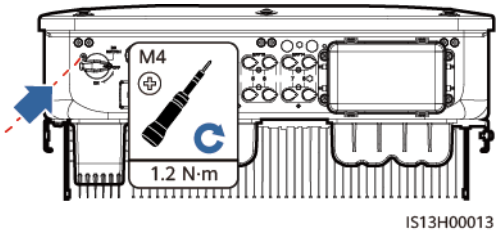

Step 5 Turn off the DC switch (if any) between the inverter and PV strings.

----End

8.2 Routine Maintenance

To ensure that the inverter can operate properly for a long term, you are advised to perform routine maintenance on it as described in this section.

CAUTION

Power off the system before cleaning the system, connecting cables, and checking grounding reliability.

Table 8-1 Maintenance checklist

Check Item	Check Method	Maintenance Interval
System cleanliness	Check whether the heat sinks are blocked or dirty.	Once every 6 to 12 months
System running status	• Check whether the inverter is damaged or deformed. • Check whether the inverter generates abnormal sound during operation. • Check whether all inverter parameters are correctly set during operation.	Once every 6 months
Electrical connections	• Check whether cables are disconnected or loose. • Check whether cables are damaged, especially whether the cable sheath that contacts a metal surface is damaged.	6 months after the first commissioning and once every 6 to 12 months after that

 Copyright © Huawei Technologies Co., Ltd.

Check Item	Check Method	Maintenance Interval
Grounding reliability	Check whether ground cables are securely connected.	6 months after the first commissioning and once every 6 to 12 months after that
Sealing	Check whether all terminals and ports are properly sealed.	Once 12 months
Vegetation around the inverter	• Perform inspection and weeding as required. • Clean the site promptly after weeding.	Based on the local wilting season

8.3 Alarm Reference

For details about alarms, see **Inverter Alarm Reference**.

 Copyright © Huawei Technologies Co., Ltd.

9 Handling the Inverter

9.1 Removing the SUN2000

NOTICE

Before removing the SUN2000, disconnect both AC and DC connections.

Perform the following operations to remove the SUN2000:

1. Disconnect all cables from the SUN2000, including RS485 communications cables, DC input power cables, AC output power cables, and PGND cables.
2. Remove the SUN2000 from the mounting bracket.
3. Remove the mounting bracket.

9.2 Packing the SUN2000

- If the original packing materials are available, put the SUN2000 inside them and then seal them by using adhesive tape.
- If the original packing materials are not available, put the SUN2000 inside a suitable cardboard box and seal it properly.

9.3 Disposing of the SUN2000

If the SUN2000 service life expires, dispose of it according to the local disposal rules for electrical equipment waste.

 Copyright © Huawei Technologies Co., Ltd.

10 Technical Specifications

Efficiency

Item	SUN2000-20KTL-M3	SUN2000-29.9KTL-M3	SUN2000-30KTL-M3	SUN2000-36KTL-M3	SUN2000-40KTL-M3
Maximum efficiency	97.1%	98.65%/400 V 98.75%/480 V	98.65%/400 V 98.75%/480 V	98.65%/400 V 98.75%/480 V	98.65%/400 V 98.75%/480 V
European efficiency	96.7%	98.4%/400 V 98.45%/480 V	98.4%/400 V 98.45%/480 V	98.4%/400 V 98.5%/480 V	98.4%/400 V 98.5%/480 V

Input

Item	SUN2000-20KTL-M3	SUN2000-29.9KTL-M3	SUN2000-30KTL-M3	SUN2000-36KTL-M3	SUN2000-40KTL-M3
Recommended maximum input DC power	30,000 W	44,850 W	45,000 W	54,000 W	60,000 W
Maximum input voltage[a]	800 V	1100 V			
Maximum input current per MPPT circuit	27 A				
Maximum short-circuit current per MPPT circuit	40 A				

 Copyright © Huawei Technologies Co., Ltd.

Item	SUN2000-20KTL-M3	SUN2000-29.9KTL-M3	SUN2000-30KTL-M3	SUN2000-36KTL-M3	SUN2000-40KTL-M3
Minimum startup voltage	200 V				
Operating voltage range[b]	200–750 V	200–1000 V			
Full-load MPPT voltage range[c]	300–550 V	500–800 V/400 V AC 625–850 V/480 V AC	500–800 V/(380 V AC, 400 V AC) 625–850 V/440 V AC 625–850 V/480 V AC	520–800 V/(380 V AC, 400 V AC) 625–850 V/440 V AC 625–850 V/480 V AC	540–800 V/(380 V AC, 400 V AC) 625–850 V/440 V AC 625–850 V/480 V AC
Rated input voltage	350 V	600 V/400 V AC 720 V/480 V AC	600 V/(380 V AC, 400 V AC) 650 V/440 V AC 720 V/480 V AC	600 V/(380 V AC, 400 V AC) 650V/440 V AC 720 V/480 V AC	600 V/(380 V AC, 400 V AC) 650 V/440 V AC 720 V/480 V AC
Maximum number of inputs	8				
Number of MPPT circuits	4				
Note a: The maximum input voltage is the maximum DC input voltage that the inverter can withstand. If the input voltage exceeds this value, the inverter may be damaged. Note b: If the input voltage is beyond the operating voltage range, the inverter cannot work properly. Note c: The PV strings connecting to the same MPPT circuit shall use the same model and quantity of PV modules. It is recommended that the PV string voltage be higher than the lower threshold of the full-load MPPT voltage.					

Output

Item	SUN2000-20KTL-M3	SUN2000-29.9KTL-M3	SUN2000-30KTL-M3	SUN2000-36KTL-M3	SUN2000-40KTL-M3
Rated output power	20,000 W	29,900 W	30,000 W	36,000 W	40,000 W

 Copyright © Huawei Technologies Co., Ltd.

Item	SUN2000-20KTL-M3	SUN2000-29.9KTL-M3	SUN2000-30KTL-M3	SUN2000-36KTL-M3	SUN2000-40KTL-M3
Maximum apparent power	22,000 VA	29,900 VA	33,000 VA[a]	40,000 VA	44,000 VA
Maximum active power (cosϕ = 1)	22,000 W	29,900 W	33,000 W[a]	40,000 W	44,000 W
Rated output voltage[b]	127 V AC/220 V AC, 230 V AC/400 V AC, 3W+(N)[c]+PE	230 V AC/400 V AC, 277 V AC/480 V AC, 3W+(N)[c]+PE	220 V AC/380 V AC, 230 V AC/400 V AC, 254 V AC/440 V AC, 277 V AC/480 V AC, 3W+(N)[c]+PE	220 V AC/380 V AC, 230 V AC/400 V AC, 254 V AC/440 V AC, 277 V AC/480 V AC, 3W+(N)[c]+PE	220 V AC/380 V AC, 230 V AC/400 V AC, 254 V AC/440 V AC, 277 V AC/480 V AC, 3W+(N)[c]+PE
Maximum output voltage at long-term operation	Refer to the local power grid standards.				
Rated output current	52.5 A/220 V AC 28.9 A/400 V AC	43.2 A/400 V AC 36.0 A/480 V AC	45.6 A/380 V AC 43.3 A/400 V AC 39.4 A/440 V AC 36.1 A/480 V AC	54.7 A/380 V AC 52.0 A/400 V AC 47.3 A/440 V AC 43.3 A/480 V AC	60.8 A/380 V AC 57.8 A/400 V AC 52.5 A/440 V AC 48.1 A/480 V AC
Maximum output current	58.0 A/220 V AC 31.9 A/400 V AC	43.2 A/400 V AC 36.0 A/480 V AC	50.4 A/380 V AC 47.9 A/400 V AC 43.5 A/440 V AC 39.9 A/480 V AC	61.1 A/380 V AC 58.0 A/400 V AC 52.8 A/440 V AC (Mexico) 48.4 A/480 V AC	67.2 A/380 V AC 63.8 A/400 V AC 58.0 A/440 V AC (Mexico) 53.2 A/480 V AC
Output voltage frequency	50 Hz/60 Hz				
Power factor	0.8 leading to 0.8 lagging				

 Copyright © Huawei Technologies Co., Ltd.

Item	SUN2000-20KTL-M3	SUN2000-29.9KTL-M3	SUN2000-30KTL-M3	SUN2000-36KTL-M3	SUN2000-40KTL-M3
Output DC component (DCI)	< 0.5% of the rated output				
Maximum total harmonic distortion AC THDi	< 3% under rated conditions. Single harmonic meets the VDE 4105 requirements.				
Note a: Under the German VDE-AR-N-4105, Belgium C10/11, and Austrian TOR grid codes, the SUN2000-30KTL-M3 has a maximum apparent power of 30000 VA and a maximum active power (cosϕ=1) of 30000 W. Note b: The rated output voltage is determined by **Grid Codes**, which can be set on the SUN2000 app, SmartLogger, or management system. Note c: You can determine whether to connect the N wire based on the application scenario. In scenarios without N wires, set **Output mode** to **Three-phase three-wire**. In scenarios with N wires, set **Output Mode** to **Three-phase four-wire**.					

Protection

Item	SUN2000-20KTL-M3	SUN2000-29.9KTL-M3	SUN2000-30KTL-M3	SUN2000-36KTL-M3	SUN2000-40KTL-M3
Overvoltage category	PV II/AC III				
Input DC switch	Supported				
Anti-islanding protection	Supported				
Output overcurrent protection	Supported				
Input reverse connection protection	Supported				
PV string fault detection	Supported				
DC surge protection	Type II				
AC surge protection	Type II				

 Copyright © Huawei Technologies Co., Ltd.

Item	SUN2000-20KTL-M3	SUN2000-29.9KTL-M3	SUN2000-30KTL-M3	SUN2000-36KTL-M3	SUN2000-40KTL-M3
Insulation resistance detection	Supported				
Residual current monitoring unit (RCMU)	Supported				

Display and Communication

Item	SUN2000-20KTL-M3	SUN2000-29.9KTL-M3	SUN2000-30KTL-M3	SUN2000-36KTL-M3	SUN2000-40KTL-M3
Display	LED indicators; WLAN+App				
RS485	Supported				
Built-in WLAN	Supported				
AC MBUS	Not supported. Certain spare part models support this function. For details, contact the dealer.				
DC MBUS	Supported				
AFCI	Supported				
PID recovery	Supported				

General Specifications

Item	SUN2000-20KTL-M3	SUN2000-29.9KTL-M3	SUN2000-30KTL-M3	SUN2000-36KTL-M3	SUN2000-40KTL-M3
Dimensions (W x H x D)	640 mm x 530 mm x 270 mm				
Net weight	43 kg				
Operating temperature	–25°C to +60°C (input derated when the temperature is above +45°C)				
Relative humidity	0%–100%				
Cooling mode	Natural convection				

 Copyright © Huawei Technologies Co., Ltd.

Item	SUN2000-20KTL-M3	SUN2000-29.9KTL-M3	SUN2000-30KTL-M3	SUN2000-36KTL-M3	SUN2000-40KTL-M3
Maximum operating altitude	4000 m				
Storage temperature	–40°C to +70°C				
IP rating	IP66				
Topology	Transformerless				

 Copyright © Huawei Technologies Co., Ltd.

Wireless Communication Specifications

Item	Inverter Built-in WiFi	WLAN-FE Smart Dongle	4G Smart Dongle
Frequency	2400–2483.5 MHz	SDongleA-05: 2400–2483.5 MHz	SDongleA-03-CN: ● Supports LTE FDD: B1/B3/B8. ● Supports LTE TDD: B38/B39/B40/B41. ● Supports DC-HSPA+/HSPA+/HSPA/UMTS: B1/B5/B8/B9. ● Supports TD-SCDMA: B34/B39. ● Supports GSM/GPRS/EDGE: 900 MHz/1800 MHz. SDongleA-03-EU: ● Supports LTE FDD: B1/B3/B7/B8/B20. ● Supports LTE TDD: B38/B40. ● Supports WCDMA/HSDPA/HSUPA/HSPA+: B1/B8. ● Supports GSM/GPRS/EDGE: 900 MHz/1800 MHz. SDongleB-06-CN (WiFi): 2400–2483.5 MHz SDongleB-06-CN (4G): ● Supports LTE FDD: B1/B3/B5/B8. ● Supports LTE TDD: B34/B38/B39/B40/B41. ● Supports GSM/GPRS/EDGE: 900 MHz/1800 MHz. SDongleB-06-EU (WiFi): 2400–2483.5 MHz SDongleB-06-EU (4G): ● Supports LTE FDD: B1/B3/B5/B8. ● Supports LTE TDD: B7/B20/B28/B38/B40/B41. ● Supports GSM/GPRS/EDGE: 900 MHz/1800 MHz. SDongleB-06-AU (WiFi): 2400–2483.5 MHz SDongleB-06-AU (4G): ● LTE-FDD: B1/B2/B3/B4/B5/B7/B8/B28 ● LTE-TDD: B40 ● WCDMA: B1/B2/B5/B8 ● GSM: 850 MHz/900 MHz/1800 MHz/1900 MHz

 Copyright © Huawei Technologies Co., Ltd.

Item	Inverter Built-in WiFi	WLAN-FE Smart Dongle	4G Smart Dongle
Protocol standard	WLAN 802.11b/g/n	SDongleA-05: WLAN 802.11b/g/n	SDongleA-03-CN: ● Supports LTE FDD (with receive diversity): B1/B3/B5/B8. ● Supports LTE TDD (with receive diversity): B34/B38/B39/B40/B41. ● Supports WCDMA: B1/B5/B8. ● Supports GSM: 900 MHz/1800 MHz. Supports digital audio. SDongleA-03-EU: ● Supports LTE FDD (with receive diversity): B1/B3/B7/B8/B20/B28. ● Supports LTE FDD (with receive diversity): B38/B40/B41. ● Supports WCDMA: B1/B8. ● Supports GSM: 900 MHz/1800 MHz. ● Supports digital audio. SDongleB-06-CN (WiFi): WLAN 802.11b/g/n SDongleB-06-CN (4G): ● Supports LTE FDD (with receive diversity): B1/B3/B5/B8. ● Supports LTE TDD (with receive diversity): B34/B38/B39/B40/B41. ● Supports GSM: 900 MHz/1800 MHz. ● Supports digital audio. SDongleB-06-EU (WiFi): WLAN 802.11b/g/n SDongleB-06-EU (4G): ● Supports LTE FDD (with receive diversity): B1/B3/B5/B8. ● Supports LTE TDD (with receive diversity): B7/B20/B28/B38/B40/B41. ● Supports GSM: 900 MHz/1800 MHz. ● Supports digital audio. SDongleB-06-AU (WiFi): WLAN 802.11b/g/n SDongleB-06-AU (4G): ● Supports LTE FDD (with receive diversity): B1/B2/B3/B4/B5/B7/B8/B28/B66.

 Copyright © Huawei Technologies Co., Ltd.

Item	Inverter Built-in WiFi	WLAN-FE Smart Dongle	4G Smart Dongle
			● Supports LTE-TDD (with receive diversity): B40. ● Supports WCDMA: B1/B2/B4/B5/B8. ● Supports GSM: 850/900/1800/1900 MHz. ● Supports digital audio.

 Copyright © Huawei Technologies Co., Ltd.

Item	Inverter Built-in WiFi	WLAN-FE Smart Dongle	4G Smart Dongle
Bandwidth	20 MHz/40 MHz (optional)	20 MHz/40 MHz (optional)	LTE features: ● Supports a maximum of 3GPP R8 non-CA Cat 4 FDD and TDD. ● Supports 1.4 MHz/3 MHz/5 MHz/10 MHz/15 MHz/20 MHz RF bandwidth. ● Supports MIMO in the downlink. ● LTE FDD: maximum downlink rate of 150 Mbit/s and maximum uplink rate of 50 Mbit/s ● LTE TDD: maximum downlink rate of 130 Mbit/s and maximum uplink rate of 30 Mbit/s UMTS features: ● Supports 3GPP R7 HSDPA+, HSDPA, HSUPA, and WCDMA. ● Supports QPSK and 16QAM modulation. ● HSDPA+: maximum downlink rate of 21 Mbit/s ● HSUPA: maximum uplink rate of 5.76 Mbit/s ● WCDMA: maximum downlink rate of 384 kbit/s and maximum uplink rate of 384 kbit/s GSM features: GPRS: ● Supports GPRS multislot class 12. ● Coding schemes: CS-1, CS-2, CS-3, and CS-4 ● Maximum downlink rate: 85.6 kbit/s; maximum uplink rate: 85.6 kbit/s EDGE: ● Supports EDGE multislot class 12. ● Supports GMSK and 8-PSK modulation and coding schemes. ● Downlink coding format: MCS 1–9 ● Uplink coding format: MCS 1–9 ● Maximum downlink rate: 236.8 kbit/s; maximum uplink rate: 236.8 kbit/s

 Copyright © Huawei Technologies Co., Ltd.

Item	Inverter Built-in WiFi	WLAN-FE Smart Dongle	4G Smart Dongle
Maximum transmit power	≤ 20 dBm EIRP	≤ 20 dBm EIRP	• Class 4 (33 dBm±2 dB), EGSM900 frequency band • Class 1 (30 dBm±2 dB), DCS1800 frequency band • Class E2 (27 dBm±3 dB), EGSM900 8-PSK • Class E2 (26 dBm±3 dB), DCS1800 8-PSK • Class 3 (24 dBm+1/–3 dB), WCDMA frequency band • Class 3 (23 dBm±2 dB), LTE FDD frequency band • Class 3 (23 dBm±2 dB), LTE TDD frequency band

 Copyright © Huawei Technologies Co., Ltd.

A Grid Codes

NOTE

The grid codes are subject to change. The listed codes are for reference only.

No.	Grid Code	Description	SUN2000-20KTL-M3	SUN2000-29.9KTL-M3	SUN2000-30KTL-M3	SUN2000-36KTL-M3	SUN2000-40KTL-M3
1	VDE-AR-N-4105	Germany low-voltage power grid	-	-	Supported	Supported	Supported
2	NB/T 32004	China low-voltage power grid	-	-	Supported	Supported	Supported
3	UTE C 15-712-1(A)	France mainland power grid	-	-	Supported	Supported	Supported
4	UTE C 15-712-1(B)	France island power grid	-	-	Supported	Supported	Supported
5	UTE C 15-712-1(C)	France island power grid	-	-	Supported	Supported	Supported
6	VDE 0126-1-1-BU	Bulgaria power grid	-	-	Supported	Supported	Supported
7	VDE 0126-1-1-GR(A)	Greece mainland power grid	-	-	Supported	Supported	Supported
8	VDE 0126-1-1-GR(B)	Greece island power grid	-	-	Supported	Supported	Supported

 Copyright © Huawei Technologies Co., Ltd.

No.	Grid Code	Description	SUN2000-20KTL-M3	SUN2000-29.9KTL-M3	SUN2000-30KTL-M3	SUN2000-36KTL-M3	SUN2000-40KTL-M3
9	BDEW-MV	Germany medium-voltage power grid	-	-	Supported	Supported	Supported
10	G59-England	England 230 V power grid (I > 16 A)	-	-	Supported	Supported	Supported
11	G59-Scotland	Scotland 240 V power grid (I > 16 A)	-	-	Supported	Supported	Supported
12	G83-England	England 230 V power grid (I < 16 A)	-	-	Supported	Supported	Supported
13	G83-Scotland	Scotland 240 V power grid (I < 16 A)	-	-	Supported	Supported	Supported
14	CEI0-21	Italy power grid	-	-	Supported	Supported	Supported
15	EN50438-CZ	Czech Republic power grid	-	-	Supported	Supported	Supported
16	RD1699/661	Spain low-voltage power grid	-	-	Supported	Supported	Supported
17	RD1699/661-MV480	Spain medium-voltage power grid	-	-	Supported	Supported	Supported
18	EN50438-NL	Netherlands power grid	-	-	Supported	Supported	Supported
19	C10/11	Belgium power grid	-	-	Supported	Supported	Supported
20	AS4777	Australia power grid	-	Supported	Supported	Supported	Supported
21	AS4777-MV480	Australia medium-voltage power grid	-	Supported	Supported	Supported	Supported

 Copyright © Huawei Technologies Co., Ltd.

No.	Grid Code	Description	SUN2000-20KTL-M3	SUN2000-29.9KTL-M3	SUN2000-30KTL-M3	SUN2000-36KTL-M3	SUN2000-40KTL-M3
22	AUSTRALIA-NER	Australia NER standard power grid	-	Supported	Supported	Supported	Supported
23	AUSTRALIA-NER-MV480	Australia NER standard power grid	-	Supported	Supported	Supported	Supported
24	AS4777-WP	Australia power grid	-	Supported	Supported	Supported	Supported
25	AS4777_ACT	Australia power grid	-	Supported	-	Supported	Supported
26	AS4777_NSW_ESS	Australia power grid	-	Supported	-	Supported	Supported
27	AS4777_NSW_AG	Australia power grid	-	Supported	-	Supported	Supported
28	AS4777_QLD	Australia power grid	-	Supported	-	Supported	Supported
29	AS4777_SA	Australia power grid	-	Supported	-	Supported	Supported
30	AS4777_VIC	Australia power grid	-	Supported	-	Supported	Supported
31	AUSTRALIA-AS4777_A-LV230	Australia power grid	-	Supported	-	Supported	Supported
32	AUSTRALIA-AS4777_B-LV230	Australia power grid	-	Supported	-	Supported	Supported
33	AUSTRALIA-AS4777_C-LV230	Australia power grid	-	Supported	-	Supported	Supported
34	AUSTRALIA-AS4777_NZ-LV230	Australia power grid	-	Supported	-	Supported	Supported
35	IEC61727	IEC 61727 low-voltage grid-connection (50 Hz)	Supported	-	Supported	Supported	Supported

 Copyright © Huawei Technologies Co., Ltd.

No.	Grid Code	Description	SUN2000-20KTL-M3	SUN2000-29.9KTL-M3	SUN2000-30KTL-M3	SUN2000-36KTL-M3	SUN2000-40KTL-M3
36	Custom (50 Hz)	Reserved	-	-	Supported	Supported	Supported
37	Custom (60 Hz)	Reserved	-	-	Supported	Supported	Supported
38	CEI0-16	Italy power grid	-	-	Supported	Supported	Supported
39	CHINA-MV480	China medium-voltage standard power grid	-	-	Supported	Supported	Supported
40	CHINA-MV	China medium-voltage standard power grid	-	-	Supported	Supported	Supported
41	TAI-PEA	Thailand grid-connection standard	-	-	Supported	Supported	Supported
42	TAI-MEA	Thailand grid-connection standard	-	-	Supported	Supported	Supported
43	BDEW-MV480	Germany medium-voltage standard power grid	-	-	Supported	Supported	Supported
44	Custom MV480 (50 Hz)	Reserved	-	-	Supported	Supported	Supported
45	Custom MV480 (60 Hz)	Reserved	-	-	Supported	Supported	Supported
46	G59-England-MV480	UK 480 V medium-voltage grid connection (I > 16 A)	-	-	Supported	Supported	Supported

 Copyright © Huawei Technologies Co., Ltd.

No.	Grid Code	Description	SUN2000-20KTL-M3	SUN2000-29.9KTL-M3	SUN2000-30KTL-M3	SUN2000-36KTL-M3	SUN2000-40KTL-M3
47	IEC61727-MV480	IEC 61727 medium-voltage grid-connection (50 Hz)	-	-	Supported	Supported	Supported
48	UTE C 15-712-1-MV480	France island power grid	-	-	Supported	Supported	Supported
49	TAI-PEA-MV480	Thailand medium-voltage grid-connection (PEA)	-	-	Supported	Supported	Supported
50	TAI-MEA-MV480	Thailand medium-voltage grid-connection (MEA)	-	-	Supported	Supported	Supported
51	EN50438-DK-MV480	Denmark medium-voltage grid-connection	-	-	Supported	Supported	Supported
52	EN50438-TR-MV480	Türkiye medium-voltage power grid	-	-	Supported	Supported	Supported
53	EN50438-TR	Türkiye low-voltage power grid	-	-	Supported	Supported	Supported
54	C11/C10-MV480	Belgium medium-voltage power grid	-	-	Supported	Supported	Supported
55	Philippines	Philippines low-voltage power grid	-	-	Supported	Supported	Supported
56	Philippines-MV480	Philippines medium-voltage power grid	-	-	Supported	Supported	Supported

 Copyright © Huawei Technologies Co., Ltd.

No.	Grid Code	Description	SUN2000-20KTL-M3	SUN2000-29.9KTL-M3	SUN2000-30KTL-M3	SUN2000-36KTL-M3	SUN2000-40KTL-M3
57	NRS-097-2-1	South Africa standard power grid	-	-	Supported	Supported	Supported
58	NRS-097-2-1-MV480	South Africa medium-voltage standard power grid	-	-	Supported	Supported	Supported
59	KOREA	South Korea power grid	-	-	Supported	Supported	Supported
60	IEEE 1547-MV480	IEEE 1547-MV480	-	-	Supported	Supported	Supported
61	IEC61727-60Hz	IEC 61727 low-voltage grid-connection (60 Hz)	-	-	Supported	Supported	Supported
62	IEC61727-60Hz-MV480	IEC 61727 medium-voltage grid-connection (60 Hz)	-	-	Supported	Supported	Supported
63	CHINA_MV500	China medium-voltage standard power grid	-	-	Supported	Supported	Supported
64	ANRE	Romania low-voltage power grid (Type A)	-	-	Supported	Supported	Supported
65	PO12.3-MV480	Spain medium-voltage power grid	-	-	Supported	Supported	Supported
66	EN50438_IE-MV480	Ireland medium-voltage power grid	-	-	Supported	Supported	Supported

 Copyright © Huawei Technologies Co., Ltd.

No.	Grid Code	Description	SUN2000-20KTL-M3	SUN2000-29.9KTL-M3	SUN2000-30KTL-M3	SUN2000-36KTL-M3	SUN2000-40KTL-M3
67	EN50438_IE	Ireland low-voltage power grid	-	-	Supported	Supported	Supported
68	IEC61727-50Hz-MV500	India 500 V medium-voltage power grid	-	-	Supported	Supported	Supported
69	CEI0-16-MV480	Italy medium-voltage power grid	-	-	Supported	Supported	Supported
70	PO12.3	Spain low-voltage power grid	-	-	Supported	Supported	Supported
71	CEI0-21-MV480	Italy medium-voltage power grid	-	-	Supported	Supported	Supported
72	KOREA-MV480	South Korea medium-voltage power grid	-	-	Supported	Supported	Supported
73	Egypt ETEC	Egypt low-voltage power grid	-	-	Supported	Supported	Supported
74	Egypt ETEC-MV480	Egypt medium-voltage power grid	-	-	Supported	Supported	Supported
75	EN50549-LV	Ireland power grid	-	-	Supported	Supported	Supported
76	EN50549-MV480	Ireland medium-voltage power grid	-	-	Supported	Supported	Supported
77	Jordan-Transmission	Jordan low-voltage power grid	-	-	Supported	Supported	Supported

 Copyright © Huawei Technologies Co., Ltd.

No.	Grid Code	Description	SUN2000-20KTL-M3	SUN2000-29.9KTL-M3	SUN2000-30KTL-M3	SUN2000-36KTL-M3	SUN2000-40KTL-M3
78	Jordan-Transmission-MV480	Jordan medium-voltage power grid	-	-	Supported	Supported	Supported
79	NAMIBIA	Namibia power grid	-	-	Supported	Supported	Supported
80	ABNT NBR 16149	Brazil power grid	-	-	Supported	Supported	Supported
81	ABNT NBR 16149-MV480	Brazil medium-voltage power grid	-	-	Supported	Supported	Supported
82	SA_RPPs	South Africa low-voltage power grid	-	-	Supported	Supported	Supported
83	SA_RPPs-MV480	South Africa medium-voltage power grid	-	-	Supported	Supported	Supported
84	INDIA	India low-voltage power grid	-	-	Supported	Supported	Supported
85	INDIA-MV500	India medium-voltage power grid	-	-	Supported	Supported	Supported
86	ZAMBIA	Zambia low-voltage power grid	-	-	Supported	Supported	Supported
87	ZAMBIA-MV480	Zambia medium-voltage power grid	-	-	Supported	Supported	Supported
88	Chile	Chile low-voltage power grid	-	-	Supported	Supported	Supported
89	Chile-MV480	Chile medium-voltage power grid	-	-	Supported	Supported	Supported

 Copyright © Huawei Technologies Co., Ltd.

No.	Grid Code	Description	SUN2000-20KTL-M3	SUN2000-29.9KTL-M3	SUN2000-30KTL-M3	SUN2000-36KTL-M3	SUN2000-40KTL-M3
90	Mexico-MV480	Mexico medium-voltage power grid	-	-	Supported	Supported	Supported
91	Malaysian	Malaysia low-voltage power grid	-	-	Supported	Supported	Supported
92	Malaysian-MV480	Malaysia medium-voltage power grid	-	-	Supported	Supported	Supported
93	KENYA_ETHIOPIA	Kenya low-voltage power grid and Ethiopia power grid	-	-	Supported	Supported	Supported
94	KENYA_ETHIOPIA-MV480	Kenya low-voltage power grid and Ethiopia medium-voltage power grid	-	-	Supported	Supported	Supported
95	NIGERIA	Nigeria low-voltage power grid	-	-	Supported	Supported	Supported
96	NIGERIA-MV480	Nigeria medium-voltage power grid	-	-	Supported	Supported	Supported
97	DUBAI	Dubai low-voltage power grid	-	-	Supported	Supported	Supported
98	DUBAI-MV480	Dubai medium-voltage power grid	-	-	Supported	Supported	Supported
99	Northern Ireland	Northern Ireland low-voltage power grid	-	-	Supported	Supported	Supported

 Copyright © Huawei Technologies Co., Ltd.

No.	Grid Code	Description	SUN2000-20KTL-M3	SUN2000-29.9KTL-M3	SUN2000-30KTL-M3	SUN2000-36KTL-M3	SUN2000-40KTL-M3
100	Northern Ireland-MV480	Northern Ireland medium-voltage power grid	-	-	Supported	Supported	Supported
101	Cameroon	Cameroon low-voltage power grid	-	-	Supported	Supported	Supported
102	Cameroon-MV480	Cameroon medium-voltage power grid	-	-	Supported	Supported	Supported
103	Jordan-Distribution	Jordan power distribution network low-voltage power grid	-	-	Supported	Supported	Supported
104	Jordan-Distribution-MV480	Jordan power distribution network medium-voltage power grid	-	-	Supported	Supported	Supported
105	NAMIBIA_MV480	Namibia power grid	-	-	Supported	Supported	Supported
106	LEBANON	Lebanon low-voltage power grid	-	-	Supported	Supported	Supported
107	LEBANON-MV480	Lebanon medium-voltage power grid	-	-	Supported	Supported	Supported
108	ARGENTINA-MV500	Argentina medium-voltage power grid	-	-	Supported	Supported	Supported
109	Jordan-Transmission-HV	Jordan high-voltage power grid	-	-	Supported	Supported	Supported

 Copyright © Huawei Technologies Co., Ltd.

No.	Grid Code	Description	SUN2000-20KTL-M3	SUN2000-29.9KTL-M3	SUN2000-30KTL-M3	SUN2000-36KTL-M3	SUN2000-40KTL-M3
110	Jordan-Transmission-HV480	Jordan high-voltage power grid	-	-	Supported	Supported	Supported
111	TUNISIA	Tunisia power grid	-	-	Supported	Supported	Supported
112	TUNISIA-MV480	Tunisia medium-voltage power grid	-	-	Supported	Supported	Supported
113	SAUDI	Saudi Arabia power grid	-	-	Supported	Supported	Supported
114	SAUDI-MV480	Saudi Arabia power grid	-	-	Supported	Supported	Supported
115	Ghana-MV480	Ghana medium-voltage power grid	-	-	Supported	Supported	Supported
116	Israel	Israel power grid	-	-	Supported	Supported	Supported
117	Israel-MV400	Israel power grid	-	-	Supported	Supported	Supported
118	Israel-MV480	Israel power grid	-	-	Supported	Supported	Supported
119	Chile-PMGD	Chile PMGD power grid	-	-	Supported	Supported	Supported
120	Chile-PMGD-MV480	Chile PMGD power grid	-	-	Supported	Supported	Supported
121	VDE-AR-N4120-HV	VDE 4120 standard power grid	-	-	Supported	Supported	Supported
122	VDE-AR-N4120-HV480	VDE 4120 standard power grid	-	-	Supported	Supported	Supported
123	CHINA-LV220/380	China low-voltage power grid	-	-	Supported	Supported	Supported
124	Vietnam	Vietnam power grid	-	-	Supported	Supported	Supported

 Copyright © Huawei Technologies Co., Ltd.

No.	Grid Code	Description	SUN2000-20KTL-M3	SUN2000-29.9KTL-M3	SUN2000-30KTL-M3	SUN2000-36KTL-M3	SUN2000-40KTL-M3
125	Vietnam-MV480	Vietnam power grid	-	-	Supported	Supported	Supported
126	TAIPOWER	Taiwan Power low-voltage power grid	-	-	Supported	Supported	Supported
127	TAIPOWER-MV480	Taiwan Power medium-voltage power grid (480 V)	-	-	Supported	Supported	Supported
128	ARGENTINA-MV480	Argentina medium-voltage power grid	-	-	Supported	Supported	Supported
129	OMAN	Oman low-voltage power grid	-	-	Supported	Supported	Supported
130	OMAN-MV480	Oman medium-voltage power grid	-	-	Supported	Supported	Supported
131	KUWAIT	Kuwait low-voltage power grid	-	-	Supported	Supported	Supported
132	KUWAIT-MV480	Kuwait medium-voltage power grid	-	-	Supported	Supported	Supported
133	BANGLADESH	Bangladesh low-voltage power grid	-	-	Supported	Supported	Supported
134	BANGLADESH-MV480	Bangladesh medium-voltage power grid	-	-	Supported	Supported	Supported
135	Chile-Net_Billing	Chile Net Billing power grid	-	-	Supported	Supported	Supported

 Copyright © Huawei Technologies Co., Ltd.

No.	Grid Code	Description	SUN2000-20KTL-M3	SUN2000-29.9KTL-M3	SUN2000-30KTL-M3	SUN2000-36KTL-M3	SUN2000-40KTL-M3
136	EN50438-NL-MV480	Netherlands medium-voltage power grid	-	-	Supported	Supported	Supported
137	BAHRAIN	Bahrain low-voltage power grid	-	-	Supported	Supported	Supported
138	BAHRAIN-MV480	Bahrain medium-voltage power grid	-	-	Supported	Supported	Supported
139	Fuel_Engine_Grid	Genset hybrid power grid	-	-	Supported	Supported	Supported
140	Fuel-Engine-Grid-60Hz	Genset hybrid power grid	-	-	Supported	Supported	Supported
141	ARGENTINA	Argentina power grid	-	-	Supported	Supported	Supported
142	Mauritius	Mauritius power grid	-	-	Supported	Supported	Supported
143	Mauritius-MV480	Mauritius medium-voltage power grid	-	-	Supported	Supported	Supported
144	EN50438-SE	Sweden low-voltage power grid	-	-	Supported	Supported	Supported
145	Pakistan	Pakistan power grid	-	-	Supported	Supported	Supported
146	Austria	Austria power grid	-	-	Supported	Supported	Supported
147	Austria-MV480	Austria medium-voltage power grid	-	-	Supported	Supported	Supported
148	G99-TYPEA-LV	UK G99-TYPEA-LV	-	-	Supported	Supported	Supported

 Copyright © Huawei Technologies Co., Ltd.

No.	Grid Code	Description	SUN2000-20KTL-M3	SUN2000-29.9KTL-M3	SUN2000-30KTL-M3	SUN2000-36KTL-M3	SUN2000-40KTL-M3
149	G99-TYPEB-LV	UK G99-TYPEB-LV	-	-	Supported	Supported	Supported
150	G99-TYPEB-HV	UK G99-TYPEB-HV	-	-	Supported	Supported	Supported
151	G99-TYPEB-HV-MV480	UK G99-TYPEB-HV medium-voltage	-	-	Supported	Supported	Supported
152	G99-TYPEA-HV	UK G99-TYPEA-HV	-	-	Supported	Supported	Supported
153	EN50549-MV400	Ireland new standard power grid	-	-	Supported	Supported	Supported
154	VDE-AR-N4110	Germany medium-voltage power grid (230 V)	-	-	Supported	Supported	Supported
155	VDE-AR-N4110-MV480	Germany medium-voltage standard power grid	-	-	Supported	Supported	Supported
156	NTS	Spain power grid	-	-	Supported	Supported	Supported
157	NTS-MV480	Spain medium-voltage power grid	-	-	Supported	Supported	Supported
158	CEA	India CEA low-voltage power grid	-	-	Supported	Supported	Supported
159	CEA-MV480	India CEA medium-voltage power grid	-	-	Supported	Supported	Supported
160	SINGAPORE	Singapore low-voltage power grid	-	-	Supported	Supported	Supported

 Copyright © Huawei Technologies Co., Ltd.

No.	Grid Code	Description	SUN2000-20KTL-M3	SUN2000-29.9KTL-M3	SUN2000-30KTL-M3	SUN2000-36KTL-M3	SUN2000-40KTL-M3
161	SINGAPORE-MV480	Singapore medium-voltage power grid	-	-	Supported	Supported	Supported
162	HONGKONG	Hong Kong low-voltage power grid	-	-	Supported	Supported	Supported
163	HONGKONG-MV480	Hong Kong medium-voltage power grid	-	-	Supported	Supported	Supported
164	C10/11-MV400	Belgium medium-voltage power grid	-	-	Supported	Supported	Supported
165	EN50549-SE	Sweden low-voltage power grid	-	-	Supported	Supported	Supported
166	EN50549-PL	Poland power grid	-	-	Supported	Supported	Supported
167	DANMARK-EN50549-DK1-LV230	Denmark power grid	-	-	Supported	Supported	Supported
168	DANMARK-EN50549-DK2-LV230	Denmark power grid	-	-	Supported	Supported	Supported
169	SWITZERLAND-LV230	Switzerland power grid	-	-	Supported	Supported	Supported
170	ABNT NBR 16149-LV127	Brazil low-voltage power grid	Supported	-	-	-	-
171	Mexico-LV220	Mexico low-voltage power grid	Supported	-	-	-	-
172	Philippines-LV220-50Hz	Philippines low-voltage power grid (50 Hz)	Supported	-	-	-	-

 Copyright © Huawei Technologies Co., Ltd.

No.	Grid Code	Description	SUN2000-20KTL-M3	SUN2000-29.9KTL-M3	SUN2000-30KTL-M3	SUN2000-36KTL-M3	SUN2000-40KTL-M3
173	Philippines-LV220-60Hz	Philippines low-voltage power grid (60 Hz)	Supported	-	-	-	-
174	TAIPOWER-LV220	Taiwan Power low-voltage power grid	Supported	-	-	-	-
175	NC2022	New Caledonia power grid	-	-	Supported	Supported	Supported
176	AUSTRIA-TYPEB-LV400	Austria power grid	-	-	Supported	Supported	Supported
177	AUSTRIA-TYPEB-LV480	Austria power grid	-	-	Supported	Supported	Supported
178	AUSTRIA-TYPEB-MV400	Austria power grid	-	-	Supported	Supported	Supported
179	AUSTRIA-TYPEB-MV480	Austria power grid	-	-	Supported	Supported	Supported

 Copyright © Huawei Technologies Co., Ltd.

B Device Commissioning

Step 1 Access **Device commissioning** screen.

Figure B-1 Method 1: before login (not connected to the Internet)

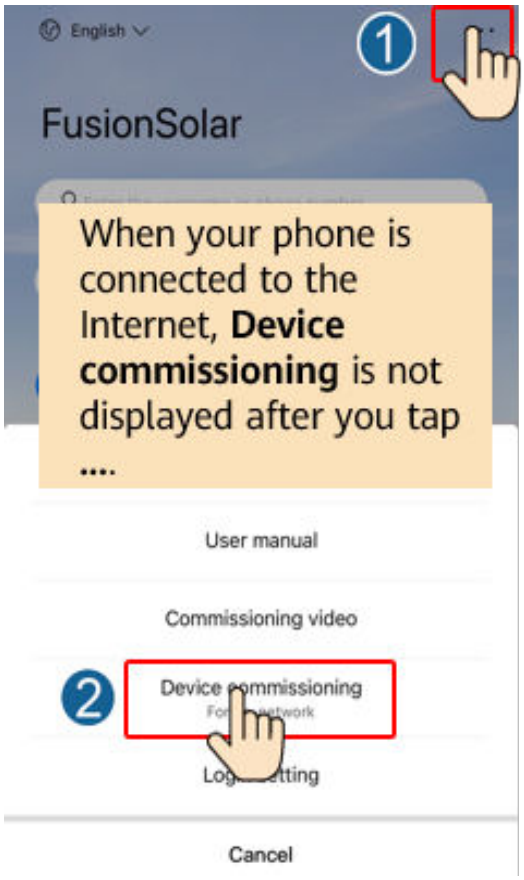

Figure B-2 Method 2: after login (connected to the Internet)

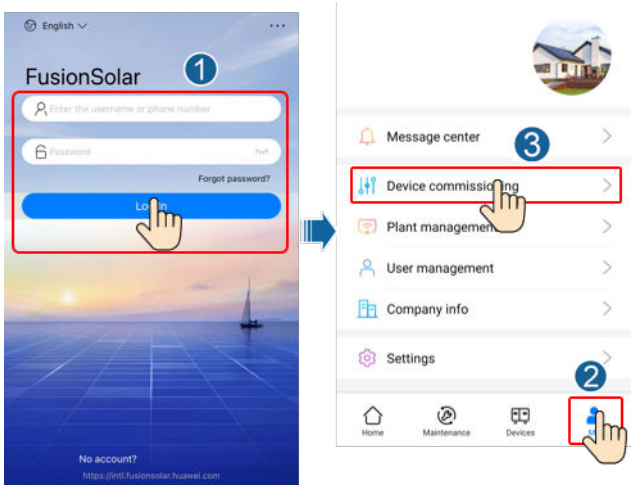

Step 2 Connect to the solar inverter WLAN and log in to the device commissioning screen as the **installer** user.

NOTICE

- When connecting to the SUN2000 directly from the mobile phone, keep the mobile phone visible within 3 meters of the SUN2000 to ensure the communication quality between the app and SUN2000. The distances are for reference only and may vary with mobile phones and shielding conditions.
- When connecting the SUN2000 to the WLAN over a router, ensure that the mobile phone and SUN2000 are in the WLAN coverage of the router and the SUN2000 is connected to the router.
- The router supports WLAN (IEEE 802.11 b/g/n, 2.4 GHz) and the WLAN signal reaches the SUN2000.
- The WPA, WPA2, or WPA/WPA2 encryption mode is recommended for routers. Enterprise-level encryption is not supported (for example, public hotspots requiring authentication such as airport WLAN). WEP and WPA TKIP are not recommended because these two encryption modes have serious security defects. If the access fails in WEP mode, log in to the router and change the encryption mode of the router to WPA2 or WPA/WPA2.

 Copyright © Huawei Technologies Co., Ltd.

NOTE

- Obtain the initial password for connecting to the solar inverter WLAN from the label on the side of the solar inverter.
- Use the initial password upon first power-on and change it immediately after login. To ensure account security, change the password periodically and keep the new password in mind. Not changing the initial password may cause password disclosure. A password left unchanged for a long period of time may be stolen or cracked. If a password is lost, devices cannot be accessed. In these cases, the user is liable for any loss caused to the PV plant.
- When you access the **Device commissioning** screen of the SUN2000 for the first time, you need to manually set the login password because the SUN2000 does not have an initial login password.

----End

 Copyright © Huawei Technologies Co., Ltd.

C Built-in PID Recovery

NOTICE

Ensure that the inverter PE cable is securely connected. Otherwise, the built-in PID recovery function may be unavailable and electric shocks may occur.

Procedure

Step 1 On the home screen, choose **Settings** > **Feature parameters** and set related parameters.

Figure C-1 Setting PID suppression parameters

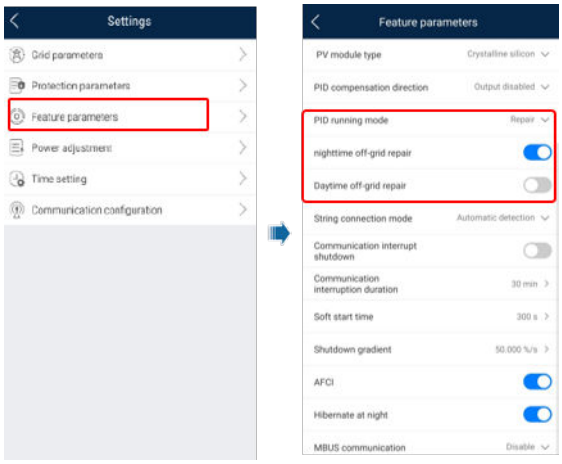

NOTE

- Set **Built-in PID running mode** to **Repair** (**Disable** by default).
- Set **Nighttime off-grid repair** to . (This parameter is displayed when **Built-in PID running mode** is set to **Repair**.)

----End

 Copyright © Huawei Technologies Co., Ltd.

D Rapid Shutdown

If optimizers are configured for all PV modules, the PV system can perform a rapid shutdown to decrease the output voltage to below 30 V within 30s. The rapid shutdown function is supported only if optimizers are configured for all PV modules.

Perform the following steps to trigger a rapid shutdown:

- Method 1 (recommended): Turn off the AC switch between the inverter and the power grid.
- Method 2: Turn off the DC switch at the bottom of the inverter.
- Method 3: If the DIN5 port (pin 15) of the inverter communications terminal is connected to a rapid shutdown switch, press the switch to trigger a rapid shutdown.

  NOTE

  Log in to the FusionSolar app as an installer, choose **Me** > **Device commissioning**, and connect to the WLAN hotspot of the inverter. Log in to the local commissioning system as an installer, choose **Settings** > **Feature parameters** > **Dry contact function**, and set **Dry contact function** to **DI rapid shutdown**.
- Method 4: If **AFCI** is enabled, the inverter automatically performs arc fault detection and triggers a rapid shutdown when AFCI lock protection is implemented.

 Copyright © Huawei Technologies Co., Ltd.

E NS Protection

Connecting the Inverter to the NS Protection Signal Cable

NOTE

- The NS protection function applies to areas in compliance with the VDE4105 standard, and the grid code needs to be set to **VDE-AR-N-4105**.
- The NS protection switch is connected to GND (pin 13) at one end and to DIN5 (pin 15) at the other end. The switch is turned off by default. When the switch is turned on, NS protection is triggered.
- Rapid shutdown and NS protection use the same pins, which are GND (pin 13) and DIN5 (pin 15). Therefore, you can use only one of the functions.
- The NS protection switch connection is the same for a single inverter and for cascaded inverters.
- Log in to the FusionSolar App as an installer, choose **Me** > **Device Commissioning**, and connect to the WLAN hotspot of the SUN2000. Log in to the local commissioning system as an installer user, choose **Settings** > **Feature parameters** > **Dry contact function**, and set **Dry contact function** to **NS protection**.

Figure E-1 Connecting cascaded inverters to the NS protection switch

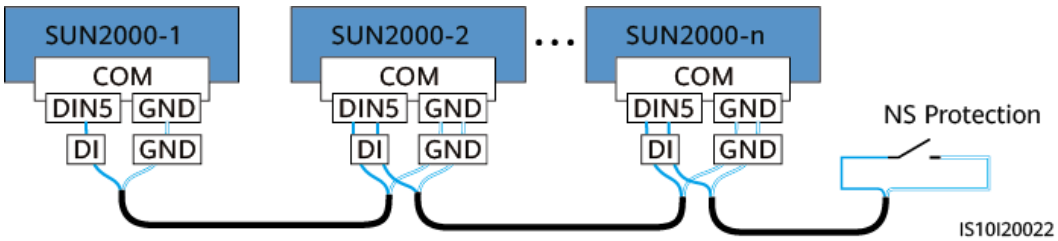

Copyright © Huawei Technologies Co., Ltd.

F Resetting a Password

Step 1 Check that the AC and DC sides of the inverter are both powered on, and indicators and are steady green or blinking slowly for more than 3 minutes.

Step 2 Turn off the AC switch, set the DC SWITCH at the bottom of the inverter to OFF, and wait until all LED indicators on the inverter panel turn off.

Step 3 Complete the following operations within 3 minutes:

1. Turn on the AC switch and wait until the inverter indicator blinks.
2. Turn off the AC switch and wait until all LED indicators on the inverter panel turn off.
3. Turn on the AC switch and wait until all LED indicators on the inverter panel blink and then turn off after about 30s.

Step 4 Wait until the three green LEDs on the inverter panel blink fast and then the three red LEDs blink fast, which indicates that the password is restored.

Step 5 Reset the password within 10 minutes. (If no operation is performed within 10 minutes, all parameters of the inverter remain unchanged.)

1. Wait until the indicator blinks.
2. Connect to the app using the initial WLAN hotspot name (SSID) and initial password (PSW), which can be obtained from the label on the side of the inverter.
3. On the login screen, set a new password and log in to the app.

Step 6 Set router and management system parameters to implement remote management.

----End

NOTICE

You are advised to reset the password in the morning or at night when the solar irradiance is low.

 Copyright © Huawei Technologies Co., Ltd.

G Setting Dry Contact Scheduling Parameters

Procedure

Step 1 On the home screen, choose **Settings** > **Power adjustment** and set **Dry contact scheduling** to .

Figure G-1 Setting dry contact scheduling parameters

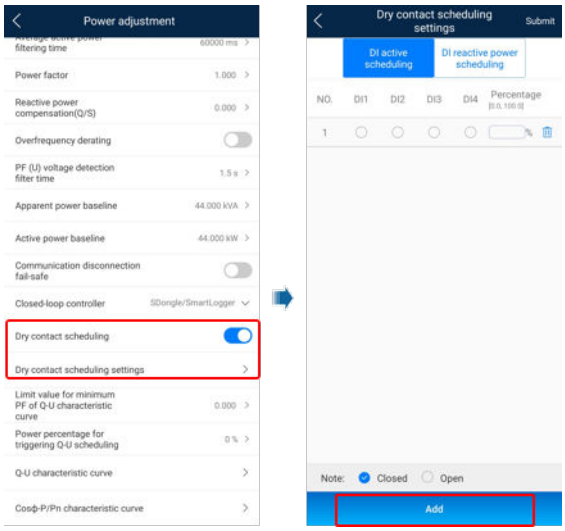

----End

 Copyright © Huawei Technologies Co., Ltd.

H AFCI

Function

If PV modules or cables are not properly connected or damaged, electric arcs may occur, which may cause fire. Huawei inverters provide unique arc detection in compliance with UL 1699B-2018 to ensure the safety of users' lives and property.

This function is enabled by default. The inverter automatically detects arc faults. To disable this function, log in to the FusionSolar App, enter the **Device Commissioning** screen, choose **Settings** > **Feature parameters**, and disable **AFCI**.

NOTE

The AFCI function works only with Huawei optimizers or ordinary PV modules, but does not support third-party optimizers or intelligent PV modules.

Clearing Alarms

The AFCI function involves the **DC arc fault** alarm.

The inverter has the AFCI alarm automatic clearance mechanism. If an alarm is triggered for less than five times within 24 hours, the inverter automatically clears the alarm. If the alarm is triggered for five times or more within 24 hours, the inverter locks for protection. You need to manually clear the alarm on the inverter so that it can work properly.

You can manually clear the alarm as follows:

- **Method 1**: FusionSolar App

  Log in to the FusionSolar App and choose **Me** > **Device commissioning**. On the **Device commissioning** screen, connect and log in to the inverter that generates the AFCI alarm, tap **Alarm management**, and tap **Clear** on the right of the **DC arc fault** alarm to clear the alarm.

 Copyright © Huawei Technologies Co., Ltd.

Figure H-1 Alarm management

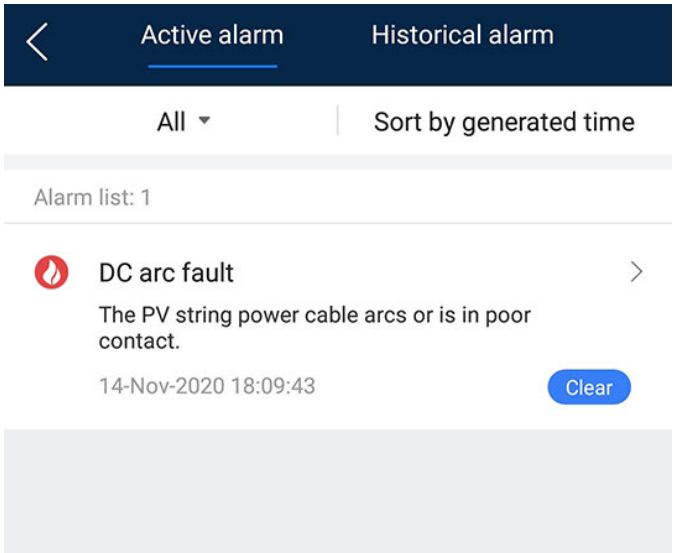

- **Method 2**: FusionSolar Smart PV Management System

  Log in to the FusionSolar Smart PV Management System using a non-owner account, choose **Maintenance** > **Alarm Management**, select the **DC arc fault** alarm, and click **Clear** to clear the alarm.

Figure H-2 Clearing alarms

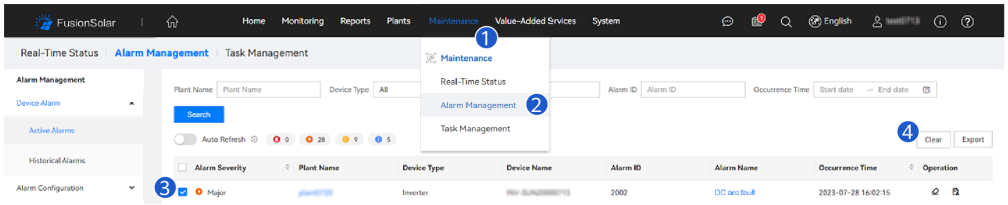

Switch to the owner account with PV plant management rights. On the home page, click the PV plant name to go to the PV plant page, and click **OK** as prompted to clear the alarm.

 Copyright © Huawei Technologies Co., Ltd.

I PV String Access Detection

Function

- PV string access detection applies to large-scale commercial and utility-scale PV plants with PV strings facing the same direction.
- In AC or DC power limiting scenarios:
  - If the PV access type is not identified, the **PV status** will be displayed as **Not connected**. The PV string access type can be identified only when the inverter restores to the non-power limiting state and the current of all connected PV strings reaches **Startup current**.
  - After setting parameters, you can view the string access status on the **Running Info** screen.

Procedure

Step 1 Log in to the FusionSolar app and choose **Me** > **Device commissioning**. The **Device commissioning** screen is displayed.

Step 2 Choose **Maintenance** > **PV string access detection**. The parameter setting screen is displayed.

 Copyright © Huawei Technologies Co., Ltd.

Figure I-1 PV string access detection

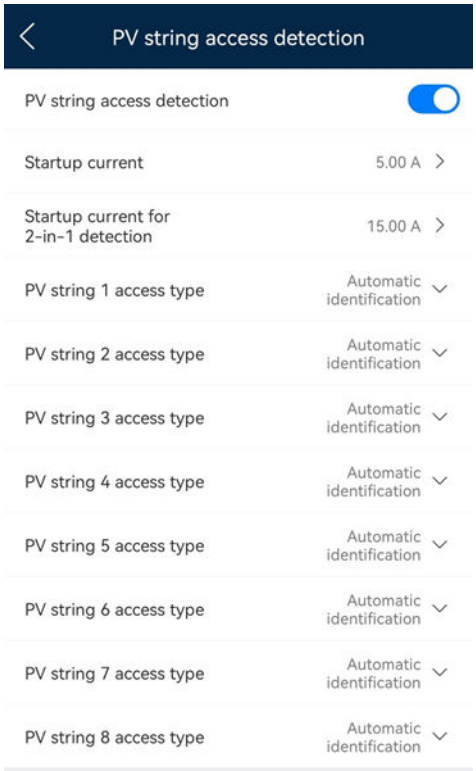

No.	Parameter	Description	Remarks
1	PV string access detection	**PV string access detection** is set to **Disable** by default. After the inverter connects to the power grid properly, set this parameter to **Enable**.	-
2	Startup current	When the current of all connected PV strings reaches the preset value, the PV string access detection function is enabled. **NOTE** Startup current setting rules: • Startup current = I_{sc} (S_{tc}) x 0.6 (rounded up). For details about I_{sc} (S_{tc}), see the PV module nameplate. • Default startup current (5 A): applicable to the scenarios where the short-circuit current I_{sc} (S_{tc}) is greater than 8 A for the monocrystalline and polycrystalline PV modules.	This parameter is displayed when **PV string access detection** is set to **Enable**.
3	Startup current for 2-in-1 detection	When the current of a PV string reaches **Startup current for 2-in-1 detection**, the PV string is automatically identified as 2-in-1. The default value is recommended.	

Copyright © Huawei Technologies Co., Ltd.

No.	Parameter	Description	Remarks
4	PV string *N* access type **NOTE** *N* is the DC input terminal number of the inverter.	Set this parameter based on the type of the PV string connected to DC input terminal *N* of the inverter. Currently, the options are as follows: **Automatic identification** (default value), **Disconnection**, **Single PV string**, and **2-in-1**. The default value is recommended. If the value is incorrectly set, the PV string access type may be incorrectly identified and false alarms may be generated for the PV string access status.	

----End

 Copyright © Huawei Technologies Co., Ltd.

J Smart I-V Curve Diagnosis

For details, see **iMaster NetEco V600R023C00 Smart I-V Curve Diagnosis User Manual**.

 Copyright © Huawei Technologies Co., Ltd.

K Locating Insulation Resistance Faults

If the ground impedance of a PV string connected to the inverter is too low, the inverter generates a **Low insulation resistance** alarm.

The possible causes are as follows:

- A short circuit has occurred between the PV array and the ground.
- The ambient air of the PV array is damp and the insulation between the PV array and the ground is poor.

After the **Low insulation resistance** alarm is reported by the inverter, insulation resistance fault location is automatically triggered. If the fault location is successful, the location information is displayed on the **Alarm details** screen of the **Low insulation resistance** alarm on the FusionSolar app.

Log in to the FusionSolar app, choose **Alarm** > **Active alarm**, select **Low insulation resistance** to enter the **Alarm details** screen.

Figure K-1 Alarm details

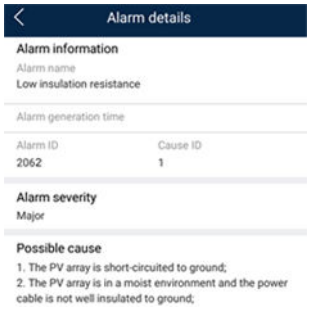

 Copyright © Huawei Technologies Co., Ltd.

NOTE

- The positive and negative terminals of a PV string are respectively connected to the PV+ and PV– terminals of the inverter. The PV– terminal represents a possibility of 0% for the short-circuit position and the PV+ terminal represents a possibility of 100% for the short-circuit position. Other percentages indicate that the fault occurs on a PV module or cable in the PV string.
- Possible fault position = Total number of PV modules in a PV string x Percentage of possible short-circuit positions. For example, if a PV string consists of 14 PV modules and the percentage of the possible short-circuit position is 34%, the possible fault position is 4.76 (14 x 34%), indicating that the fault is located near PV module 4, including the previous and the next PV modules and the cables. The inverter has a detection precision of ±1 PV module.
- The possible faulty PV string MPPT1 corresponds to PV1 and PV2, and the possible faulty PV string MPPT2 corresponds to PV3 and PV4. The fault can be located only to the MPPT level. Perform the following steps to connect the PV strings corresponding to the faulty MPPT to the inverter one by one to further locate and rectify the fault.
- When a non-short-circuit fault occurs, the possible short-circuit percentage is not displayed. If the insulation resistance is greater than 0.001 MΩ, the fault is not related to short circuit. Check all PV modules in the faulty PV string one by one to locate and rectify the fault.

Figure K-2 Percentage of short-circuit positions

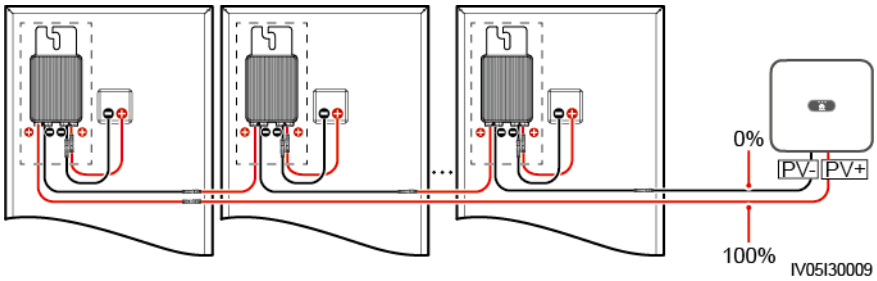

Procedure

NOTICE

If the irradiance or the PV string voltage is too high, the insulation resistance fault location may fail. In this case, the fault location status on the **Alarm details** screen is **Conditions not met**. Perform the following steps to connect PV strings to the inverter one by one to locate the fault. If the system is not configured with any optimizer, skip the corresponding optimizer operations.

Step 1 Ensure that the AC connections are normal. Log in to the FusionSolar app, choose **Maintenance** > **Inverter ON/OFF** on the home screen, and send a shutdown command. Set **DC SWITCH** to **OFF**.

Step 2 Connect one PV string to the inverter, and set **DC SWITCH** to **ON**. If the inverter status is **Shutdown: Command**, log in to the app, choose **Maintenance** > **Inverter ON/OFF** on the home screen, and send a startup command.

Step 3 Choose **Alarm** on the home screen, enter the **Active alarm** screen, and check whether a **Low insulation resistance** alarm is reported.

 Copyright © Huawei Technologies Co., Ltd.

- If no **Low insulation resistance** alarm is reported 1 minute after the DC side is powered on, choose **Maintenance** > **Inverter ON/OFF** on the home screen, and send a shutdown command. Set **DC SWITCH** to **OFF**. Go to **Step 2** and check rest of the PV strings one by one.
- If a **Low insulation resistance** alarm is reported 1 minute after the DC side is powered on, check the percentage of possible short-circuit positions on the **Alarm details** screen and calculate the location of the possible faulty PV module based on the percentage. Then go to **Step 4**.

Step 4 Log in to the app, choose **Maintenance** > **Inverter ON/OFF** on the home screen, and send a shutdown command. Set **DC SWITCH** to **OFF**. Check whether the connectors or DC power cables between the optimizer and PV module, between adjacent PV modules, or between adjacent optimizers on the possible fault position are damaged.

- If yes, replace the damaged connectors or DC power cables, and then set **DC SWITCH** to **ON**. If the inverter status is **Shutdown: Command**, choose **Maintenance** > **Inverter ON/OFF**, and send a startup command. View alarm information.
  - If no **Low insulation resistance** alarm is reported 1 minute after the DC side is powered on, troubleshoot the insulation resistance fault of the PV string. Log in to the app, choose **Maintenance** > **Inverter ON/OFF** on the home screen, and send a shutdown command. Set **DC SWITCH** to **OFF**. Go to **Step 2** and check rest of the PV strings one by one. Then, go to **Step 8**.
  - If the DC side is powered on 1 minute later, the **Low insulation resistance** alarm is still reported. Log in to the app, choose **Maintenance** > **Inverter ON/OFF** on the home screen, and send a shutdown command. Set **DC SWITCH** to **OFF** and go to **Step 5**.
- If no, go to **Step 5**.

Step 5 Disconnect the possible faulty PV module and the paired optimizer from the PV string, and use a DC extension cable with an MC4 connector to connect the PV module or optimizer adjacent to the possible faulty PV module. Set **DC SWITCH** to **ON**. If the inverter status is **Shutdown: Command**, choose **Maintenance** > **Inverter ON/OFF** on the home screen, and send a startup command. View alarm information.

- If no **Low insulation resistance** alarm is reported 1 minute after the DC side is powered on, the fault occurred on the disconnected PV module and optimizer. Choose **Maintenance** > **Inverter ON/OFF**, send a shutdown command, and set **DC SWITCH** to **OFF**. Go to **Step 7**.
- If the **Low insulation resistance** alarm is reported 1 minute after the DC side is powered on, the fault did not occur on the disconnected PV module and optimizer. Go to **Step 6**.

Step 6 Log in to the app, choose **Maintenance** > **Inverter ON/OFF** on the home screen, and send a shutdown command. Set **DC SWITCH** to **OFF**, reconnect the disconnected PV module and optimizer, and repeat **Step 5** to check the PV modules and optimizers adjacent to the possible fault location.

Step 7 Determine the position of the ground insulation fault:

- Disconnect the possible faulty PV module from the optimizer.

 Copyright © Huawei Technologies Co., Ltd.

- Connect the possible faulty optimizer to the PV string.
- Set **DC SWITCH** to **ON**. If the inverter status is **Shutdown: Command**, choose **Maintenance** > **Inverter ON/OFF**, and send a startup command. View alarm information.
  - If no **Low insulation resistance** alarm is reported 1 minute after the DC side is powered on, the fault is on the possible faulty PV module.
  - If the **Low insulation resistance** alarm is reported 1 minute after the DC side is powered on, the fault is on the possible faulty optimizer.
- Log in to the app, choose **Maintenance** > **Inverter ON/OFF** on the home screen, and send a shutdown command. Set **DC SWITCH** to **OFF**, replace the faulty component, and complete troubleshooting the insulation resistance fault. Go to **Step 2** and check rest of the PV strings one by one. Then, go to **Step 8**.

Step 8 Set **DC SWITCH** to **ON**. If the inverter status is **Shutdown: Command**, choose **Maintenance** > **Inverter ON/OFF**, and send a startup command.

----End

 Copyright © Huawei Technologies Co., Ltd.

L Contact Information

If you have any questions about this product, please contact us.

https://digitalpower.huawei.com

Path: **About Us** > **Contact Us** > **Service Hotlines**

To ensure faster and better services, we kindly request your assistance in providing the following information:

- Model
- Serial number (SN)
- Software version
- Alarm ID or name
- Brief description of the fault symptom

Copyright © Huawei Technologies Co., Ltd.

NOTE

EU Representative Information: Huawei Technologies Hungary Kft.
Add.: HU-1133 Budapest, Váci út 116-118., 1. Building, 6. floor.
Email: hungary.reception@huawei.com

 Copyright © Huawei Technologies Co., Ltd.

M Digital Power Customer Service

https://digitalpower.huawei.com/robotchat/

N Acronyms and Abbreviations

A	
AFCI	arc-fault circuit interrupter
L	
LED	light emitting diode
M	
MBUS	monitoring bus
MPP	maximum power point
MPPT	maximum power point tracking
P	
PE	protective earthing
PID	potential induced degradation
PV	photovoltaic
R	
RCD	residual current device

 Copyright © Huawei Technologies Co., Ltd.