SUN2000-(50KTL, 60KTL, 65KTL)-M0

Quick Guide

Issue: 08
Part Number: 31509437
Date: 2021-04-20

HUAWEI TECHNOLOGIES CO., LTD.

NOTICE

- The information in this document is subject to change without notice. Every effort has been made in the preparation of this document to ensure accuracy of the contents, but all statements, information, and recommendations in this document do not constitute a warranty of any kind, express or implied.
- Before installing the device, carefully read the user manual to get familiar with product information and precautions.
- Only qualified and trained electrical technicians are allowed to operate the device. Operators should understand the components and functioning of a grid-tied PV power system, and they should be familiar with relevant local standards.
- Before installing the device, check that package contents are intact and complete against the packing list. If any damage is found or any component is missing, contact the dealer.
- Use insulated tools when installing the device. For personal safety, wear proper personal protective equipment (PPE).
- Huawei shall not be liable for any consequence caused by violation of the storage, moving, installation, and operation regulations specified in this document and the user manual.

1 Product Overview

Front View

(1) PV connection indicator

(2) Grid-tied indicator

(3) Communication indicator

(4) Alarm/Maintenance indicator

(5) Maintenance compartment door

(6) Host panel cover

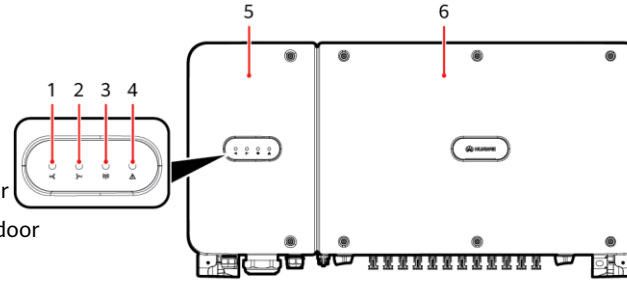

IS06W00008

Indicator Description

Indicator	Status	Description
PV connection indicator	Steady green	At least one PV string is properly connected, and the DC input voltage of the corresponding MPPT circuit is higher than or equal to 200 V.
	Off	The SUN2000 disconnects from all PV strings, or the DC input voltage of each MPPT circuit is less than 200 V.
Grid-tied indicator	Steady green	The SUN2000 has connected to the power grid.
	Off	The SUN2000 does not connect to the power grid.
Communication indicator	Blinking green (on for 0.2s and then off for 0.2s)	The SUN2000 receives communications data normally.
	Off	The SUN2000 receives no communications data for 10s.

Copyright © Huawei Technologies Co., Ltd.
2021. All rights reserved.

Indicator	Status		Description
Alarm/Maintenance indicator	Alarm status	Blinking red at long intervals (on for 1s and then off for 4s)	A warning alarm is generated.
		Blinking red at short intervals (on for 0.5s and then off for 0.5s)	A minor alarm is generated.
		Steady red	A major alarm is generated.
	Local maintenance status	Blinking green at long intervals (on for 1s and then off for 1s)	Local maintenance is in progress.
		Blinking green at short intervals (on for 0.125s and then off for 0.125s)	Local maintenance fails.
		Steady green	Local maintenance succeeds.

Ports

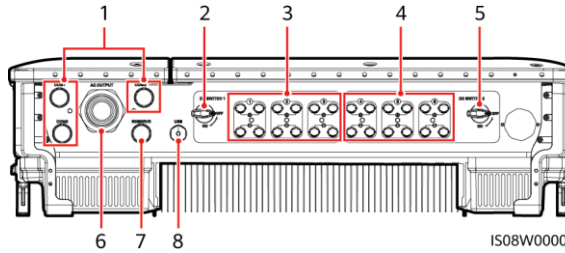

(1) Cable gland (COM1, COM2, and COM3)

(2) DC switch 1 (DC SWITCH 1)

(3) DC input terminals (controlled by DC SWITCH 1)

(4) DC input terminals (controlled by DC SWITCH 2)

(5) DC switch 2 (DC SWITCH 2)

(6) Cable gland (AC OUTPUT)

(7) Cable gland (RESERVE)

(8) USB port (USB)

SUN2000 Dimensions

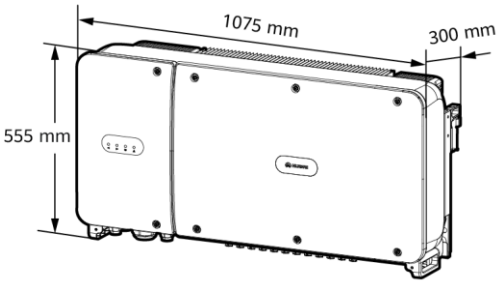

Mounting Bracket Dimensions

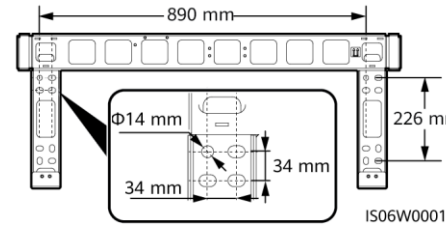

2 Installation Requirements

2.1 Installation Angle

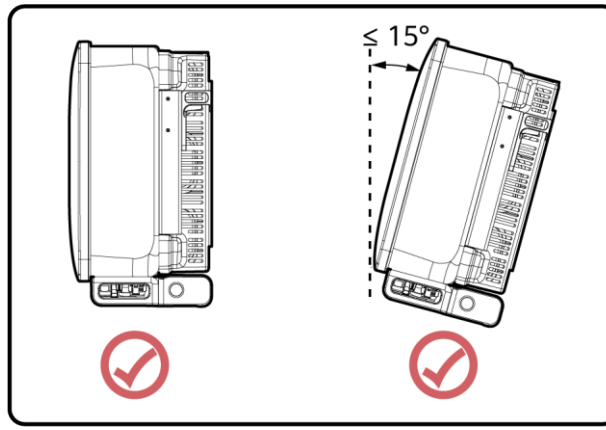

IS06W00011

2.2 Installation Space

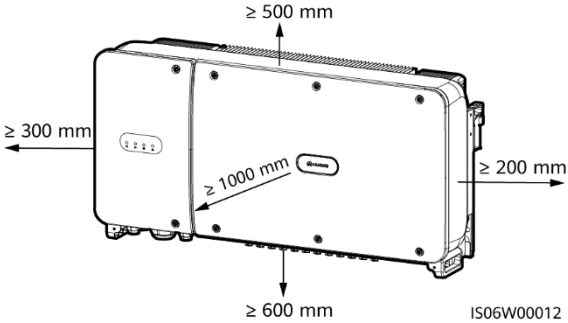

IS06W00012

NOTE

For ease of installing the SUN2000 on the mounting bracket, connecting cables to the bottom of the SUN2000, and maintaining the SUN2000 in future, it is recommended that the bottom clearance be between 600 mm and 730 mm.

3 Installing the SUN2000

NOTE

- The SUN2000 mounting bracket has four groups of tapped holes, each group containing four tapped holes. Mark any hole in each group based on site requirements and mark four holes in total. Two round holes are preferred.
- M12x40 bolt assemblies are supplied with the SUN2000. If the bolt length does not meet the installation requirements, prepare M12 bolt assemblies by yourself and use them together with the supplied M12 nuts.
- The following describes how to install the SUN2000 by using support installation as an example. For details about wall-mounted installation, see the user manual.
- Save the security torx wrench for later use after removing it from the mounting bracket.

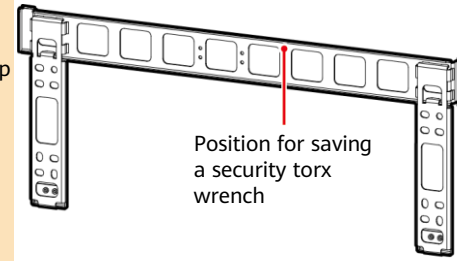

IS06H00045

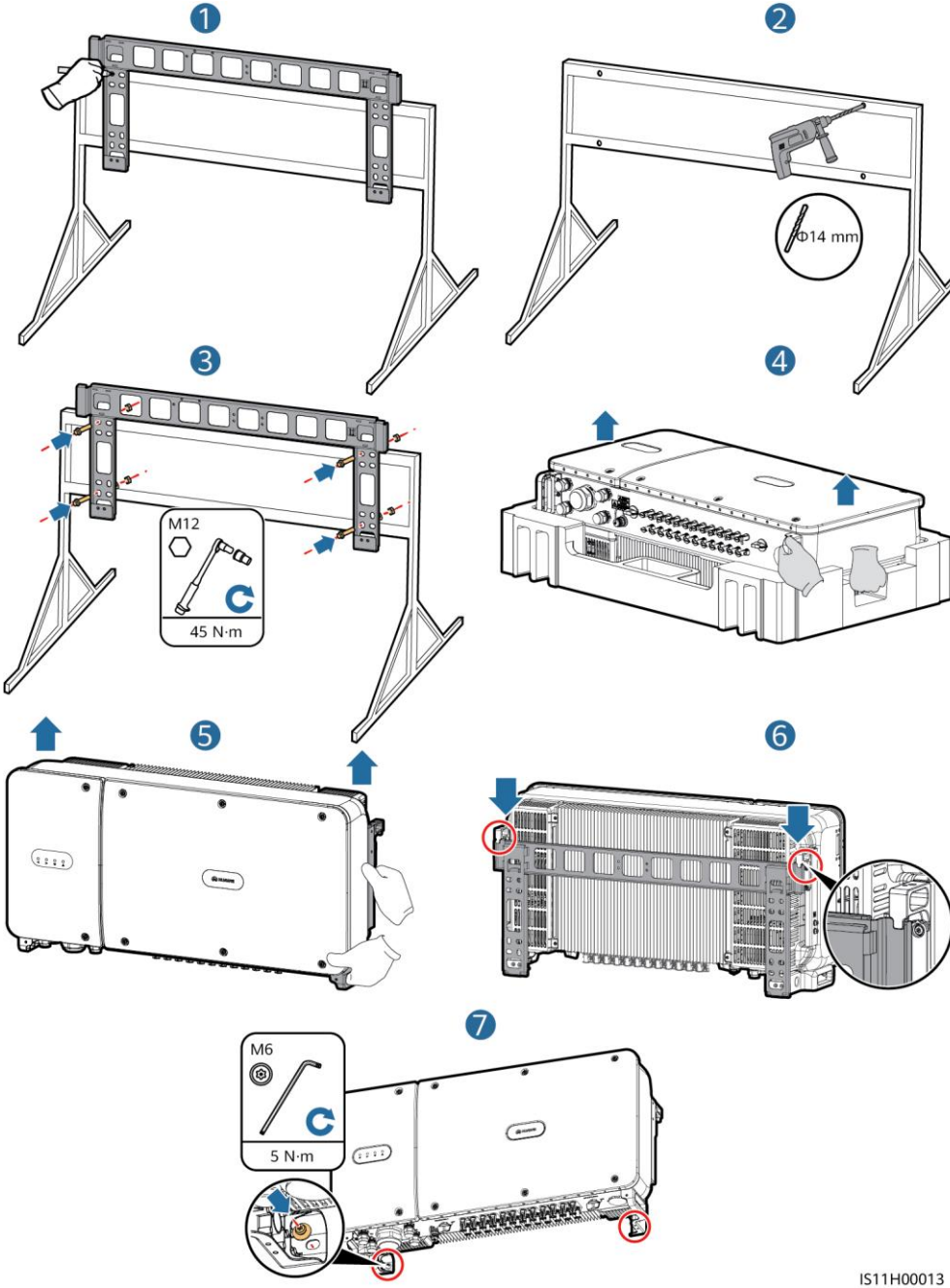

NOTE

You are advised to apply anti-rust paint on the hole positions for protection.

4 Installing Cables

4.1 Installation Preparations

NOTE

- Before installing cables, ensure that all required OT terminals and cables are prepared.
- The following table lists only recommended cable specifications. For more cable specifications, see the user manual.

No.	Name	Model/ Specifications	Description
1	Ground cable	16 mm^2 outdoor copper cable	• If you choose the ground point on the enclosure for connecting a ground cable, prepare the ground cable. • If you choose the ground point in the maintenance compartment for connecting a ground cable, use an AC output cable that includes a ground cable instead of preparing an extra ground cable.
2	AC output power cable	35 mm^2 outdoor copper cable	N/A
3	OT terminal	M8	When using outdoor copper cables for AC connection, select copper wiring terminals. For requirements on the cables and terminals of other materials, see the user manual.
		M10	
4	DC input power cable	PV cable that meets the 1100 V standard	N/A
5	RS485 communications cable (terminal block)	Communications cable with a conductor cross-sectional area of 1 mm^2 and outer diameter of 14–18 mm	• If RS485 communication is used, prepare the RS485 communications cable. • A terminal block is recommended for connecting the RS485 communications cable.
	RS485 communications cable (RJ45 network port)	CAT 5E outdoor shielded network cable with an outer diameter less than 9 mm and internal resistance not greater than 1.5 ohms/10 m, as well as shielded RJ45 connectors	
6	Solar tracker power cable (optional)	Dual-layer three-core outdoor copper cable with a conductor cross-sectional area of 10 mm^2	N/A
7	Cable tie	N/A	N/A

4.2 Installing the Ground Cable

NOTE

- The ground point on the enclosure is preferred to connect to the PE cable for the SUN2000.
- The ground point in the maintenance compartment is mainly used for connecting to the ground cable included in the multi-core AC power cable. For details, see section " 4.4 Installing AC Output Power Cables."
- The ground cable must be secured.
- It is recommended that the ground cable of the SUN2000 be connected to the nearest ground point. For a system with multiple SUN2000s connected in parallel, connect the ground points of all SUN2000s to ensure equipotential connections to ground cables.
- To enhance the corrosion resistance of the PE terminal, apply silica gel or paint on it after connecting the ground cable.

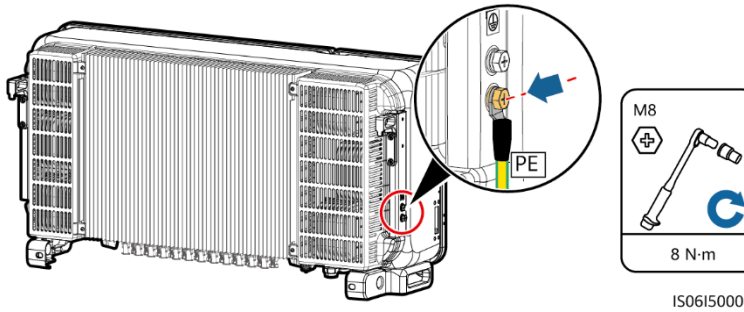

4.3 Opening the Maintenance Compartment Door

WARNING

- Never open the host panel of the SUN2000.
- Before opening the maintenance compartment door, turn off the downstream AC output switch and the two DC switches at the bottom.
- Do not open the maintenance compartment door in rainy or snowy days. If unavoidable, take protective measures to prevent rain or snow from entering the maintenance compartment.
- Do not leave unused screws in the maintenance compartment.

1. Loosen the two screws on the maintenance compartment door using a security torx wrench.

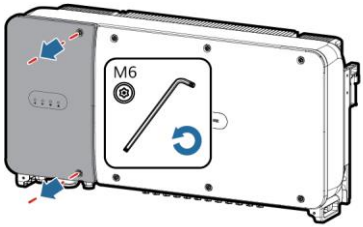

2. Open the maintenance compartment door and install the support bar.

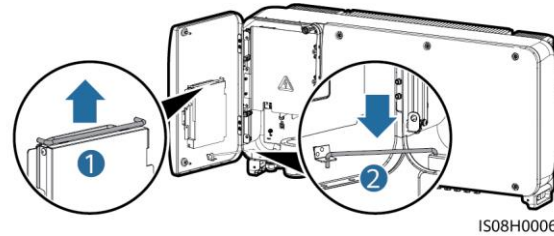

NOTE

If the screws on the enclosure door are lost, obtain spare screws from the fitting bag bound to the inductor cover at the bottom of the enclosure.

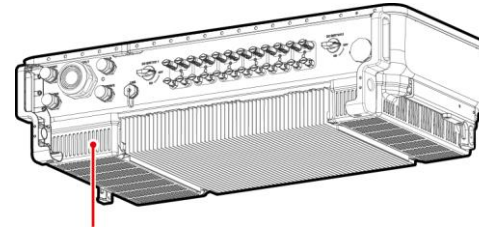

3. Remove the cover and hang it on the hook of the enclosure door.

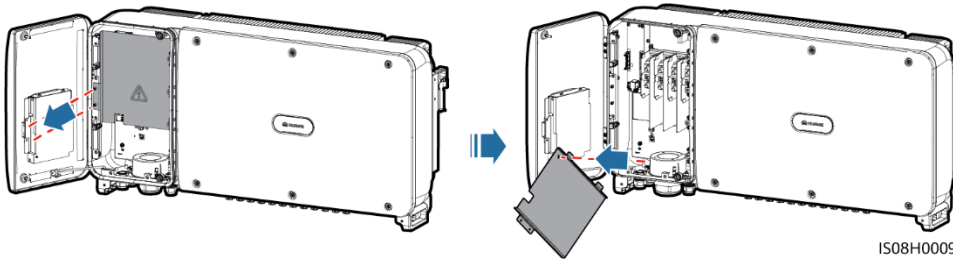

4.4 Installing AC Output Power Cables

NOTE

- For the SUN2000-50KTL/60KTL-M0:
  - If you connect a ground cable to the ground point on the enclosure in a scenario with no neutral wire, you are advised to use a three-core (L1, L2, and L3) outdoor cable.
  - If you connect a ground cable to the ground point in the maintenance compartment in a scenario with no neutral wire, you are advised to use a four-core (L1, L2, L3, and PE) outdoor cable.
  - If you connect a ground cable to the ground point on the enclosure in a scenario with a neutral wire, you are advised to use a four-core (L1, L2, L3, and N) outdoor cable.
  - If you connect a ground cable to the ground point in the maintenance compartment in a scenario with a neutral wire, you are advised to use a five-core (L1, L2, L3, N, and PE) outdoor cable.
- For the SUN2000-65KTL-M0:
  - If you connect a ground cable to the ground point on the enclosure, you are advised to use a three-core (L1, L2, and L3) outdoor cable.
  - If you connect a ground cable to the ground point in the maintenance compartment, you are advised to use a four-core (L1, L2, L3, and PE) outdoor cable.

1. Remove the locking cap from the AC OUTPUT cable gland and then remove the plug.
2. Route the cable through the cable gland.

NOTICE

1. Select an appropriate rubber fitting based on the outer diameter of the AC power cable to ensure proper sealing.
2. To avoid damaging the rubber fitting, do not route a cable with a crimped OT terminal through the rubber fitting.
3. Do not adjust the cable when the thread-lock sealing nut is tightened. Otherwise, the rubber fitting will shift, which affects the Ingress Protection Rating of the device.

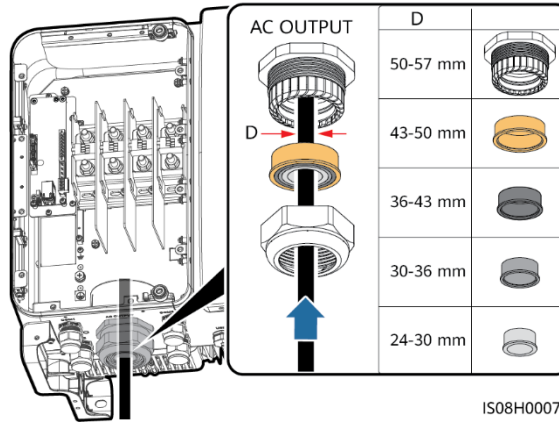

3. Remove an appropriate length of the jacket and insulation layer from the AC output power cable using a wire stripper. (Ensure that the jacket is in the maintenance compartment.)

a. Three-core cable (excluding the ground cable and neutral wire)

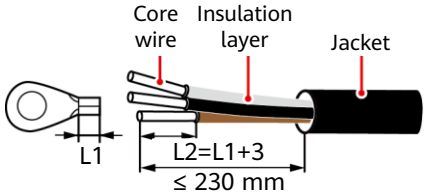

b. Four-core cable (including the ground cable but excluding the neutral wire)

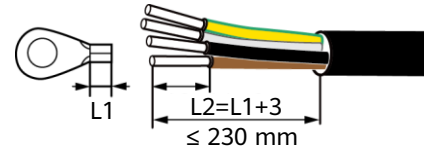

c. Four-core cable (excluding the ground cable but including the neutral wire)

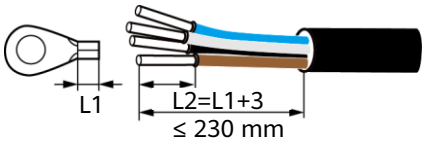

d. Five-core cable (including the ground cable and neutral wire)

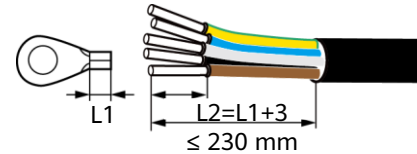

4. Crimp an OT terminal.

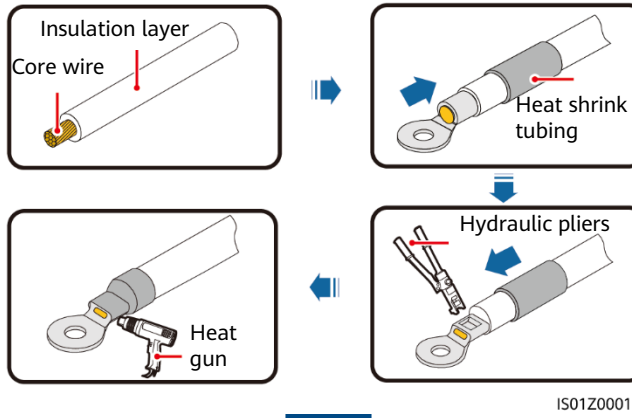

5. Connect the AC output power cable to the terminal block, and then tighten the nut using a torque wrench that has an extension rod.

NOTICE

- Ensure that AC terminations provide firm and solid electrical connections. Failing to do so may cause SUN2000 malfunction and damage to its terminal block, even starting thermal events.
- When connecting a PE cable, secure the screws using a socket wrench with an extension wrench longer than 200 mm.
- If the AC output power cables are subject to a pulling force because the inverter is not installed stably, ensure that the last cable that bears the stress is the PE cable.

SUN2000-50KTL/60KTL-M0

a. Three-core cable (excluding the ground cable and neutral wire)

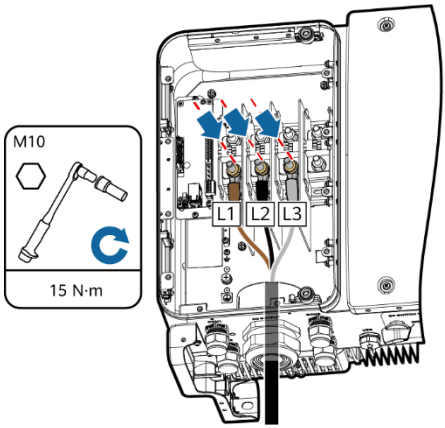

b. Four-core cable (including the ground cable but excluding the neutral wire)

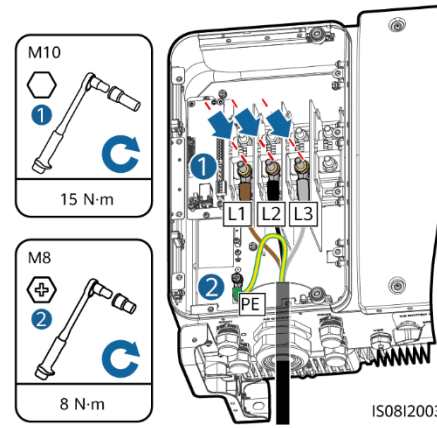

c. Four-core cable (excluding the ground cable but including the neutral wire)

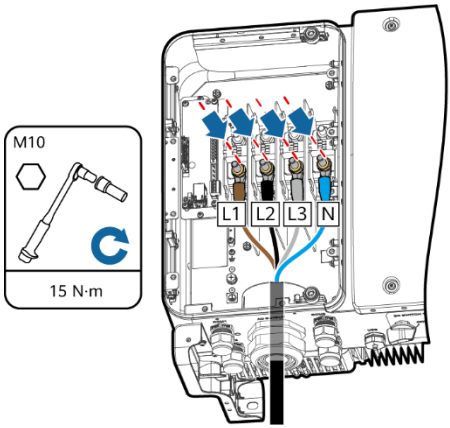

d. Five-core cable (including the ground cable and neutral wire)

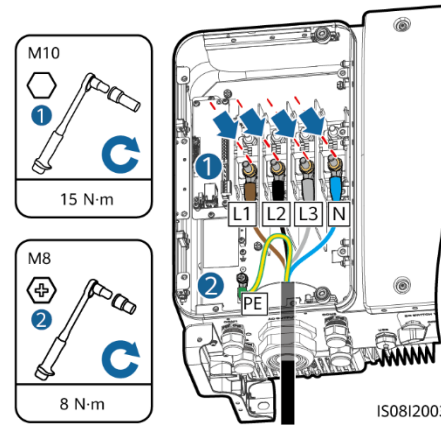

SUN2000-65KTL-M0

a. Three-core cable (excluding the ground cable)

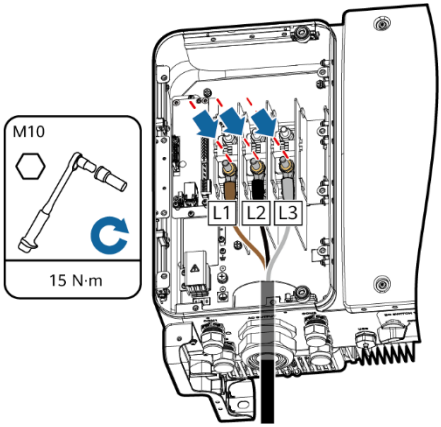

b. Four-core cable (including the ground cable)

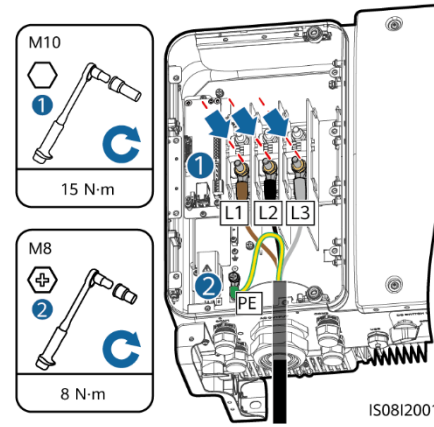

6. Tighten the thread-lock sealing nut.
7. Clear debris from the maintenance compartment.

4.5 Installing DC Input Power Cables

Selecting DC Input Terminals

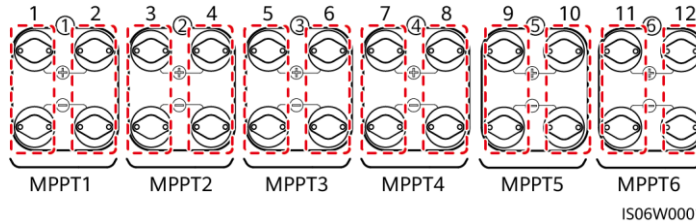

NOTE

The SUN2000 provides two DC switches, named as DC SWITCH 1 and DC SWITCH 2. DC SWITCH 1 controls the 1st to 6th sets of DC input terminals, whereas DC SWITCH 2 controls the 7th to 12th sets of DC input terminals.

Select DC input terminals according to the following rules:

1. Evenly distribute DC input power cables on the DC input terminals controlled by the two DC switches.
2. Maximize the number of connected MPPT circuits.

WARNING

Ensure that the PV module output is well insulated to ground.

NOTICE

1. Use the Amphenol Helios H4 PV connectors provided with the SUN2000. If the terminals are lost or damaged, purchase the PV connectors of the same model. The device damaged caused by incompatible PV connectors is not covered under any warranty or service agreement.
2. The metal contacts supplied with the DC connectors are either cold forming contacts or stamping forming contacts. Crimp the metal cold forming contacts using crimping tool UTXTC0005 (Amphenol, recommended) or H4TC0001 (Amphenol). Crimp the metal stamping forming contacts using crimping tool H4TC0003 (Amphenol, recommended) or H4TC0002 (Amphenol). Choose the crimping tools that fit the metal contacts.
3. Before connecting DC input power cables, label the cable polarities to ensure correct cable connections. If the cables are connected incorrectly, the SUN2000 may be damaged.
4. Insert the crimped metal terminals of the positive and negative power cables into the appropriate positive and negative connectors. Then pull the DC input power cables to ensure that they are connected securely.
5. Connect the positive and negative connectors to the appropriate positive and negative DC input terminals. Then pull the DC input power cables to ensure that they are connected securely.
6. If polarity of the DC input power cable is reversed and the DC switch is ON, do not turn off the DC switch immediately or unplug positive and negative connectors. The device may be damaged if you do not follow the instruction. The caused equipment damage is beyond the warranty scope. Wait until the solar irradiance declines and the PV string current reduces to below 0.5 A, and then turn off the two DC switches and remove the positive and negative connectors. Correct the string polarity before reconnecting the string to the SUN2000.

Installing a DC Input Power Cable (Using Metal Cold Forming Contacts)

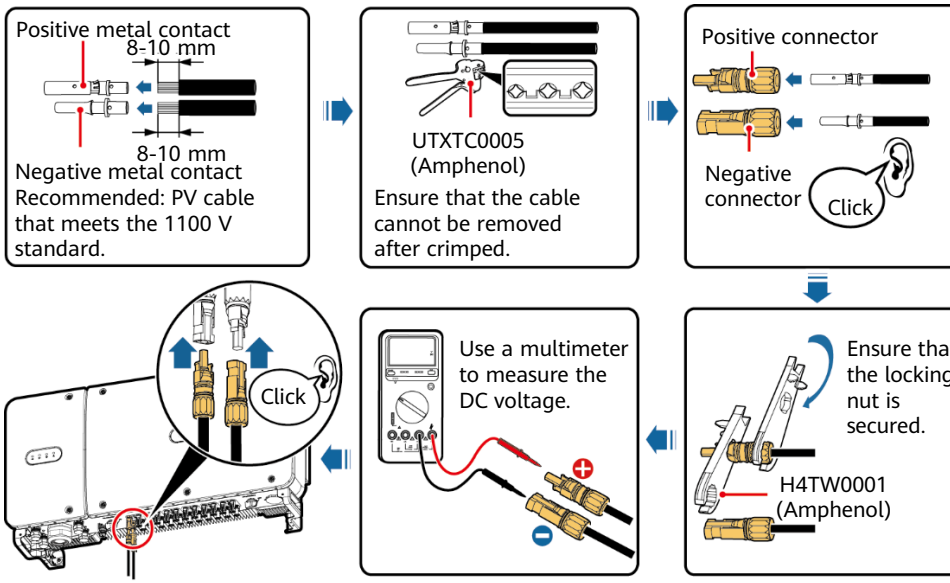

Installing a DC Input Power Cable (Using Metal Stamping Forming Contacts)

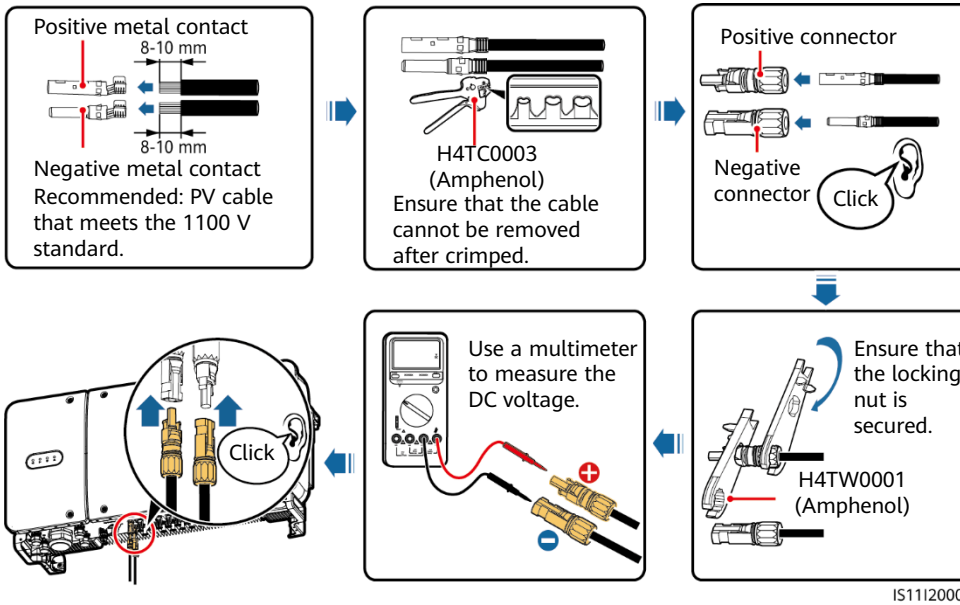

NOTICE

- If the voltage is a negative value, the DC input polarity is incorrect. Correct the polarity.
- If the voltage is greater than 1100 V DC, too many PV modules are configured to the same string. Remove some PV modules.

4.6 Installing the RS485 Communications Cable

NOTICE

- When routing communications cables, separate communications cables from power cables to prevent communication from being affected.
- An RS485 cable can connect to either a terminal block or an RJ45 network port. It is recommended that the RS485 cable connect to a terminal block.

Terminal Block Connection (Recommended)

1. Remove an appropriate length of the jacket and core wire insulation layer from the communications cable using a wire stripper.

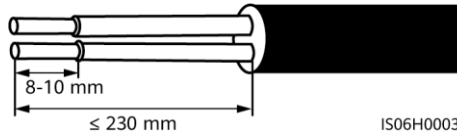

2. Route the cable through the cable gland.

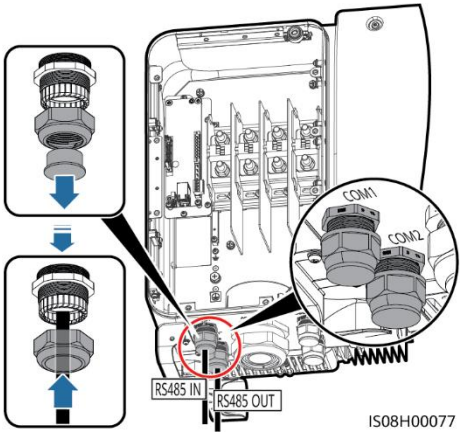

3. Remove the cable terminal base from the terminal block. Connect the communications cable to the terminal base.

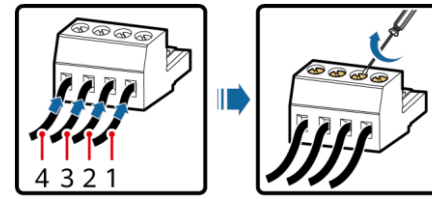

No.	Port Definition	Description
1	RS485A IN	RS485A, RS485 differential signal+
2	RS485A OUT	RS485A, RS485 differential signal+
3	RS485B IN	RS485B, RS485 differential signal–
4	RS485B OUT	RS485B, RS485 differential signal–

4. Install the terminal base on the terminal block, and connect the shield layer to the ground point.

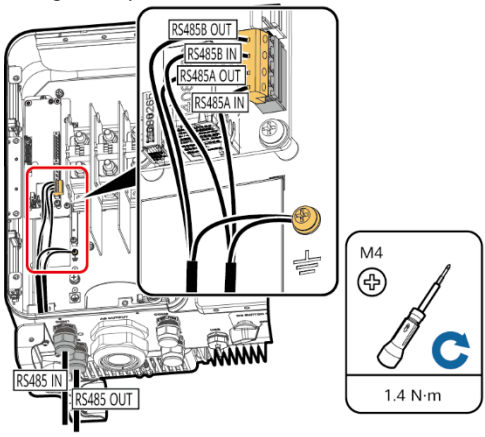

5. Bind the communications cable.

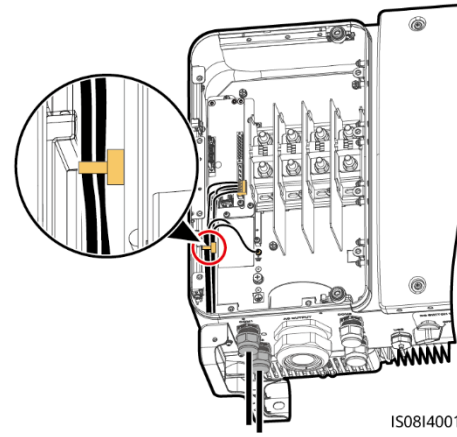

NOTE

- When connecting the shielded cable, choose whether to crimp the OT terminal based on site requirements.
- Tie the communication cables with the cables on internal side of the maintenance compartment.

6. Tighten the thread-lock sealing nut and seal the cable gland.

RJ45 Network Port Connection

1. Prepare an RJ45 connector.

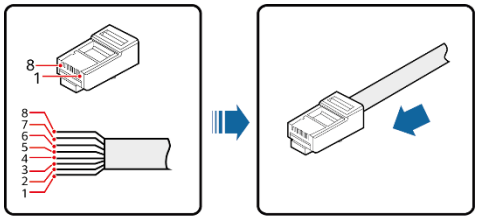

IS01ZC0021

No.	Color	Pin Definition
1	White-and-orange	RS485A, RS485 differential signal+
2	Orange	RS485B, RS485 differential signal–
3	White-and-green	N/A
4	Blue	RS485A, RS485 differential signal+
5	White-and-blue	RS485B, RS485 differential signal–
6	Green	N/A
7	White-and-brown	N/A
8	Brown	N/A

2. Route the cable through the cable gland.

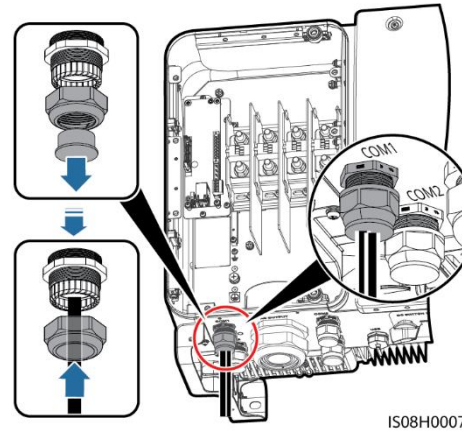

IS08H00078

3. Insert the RJ45 connector into the RJ45 network port in the SUN2000 maintenance compartment.

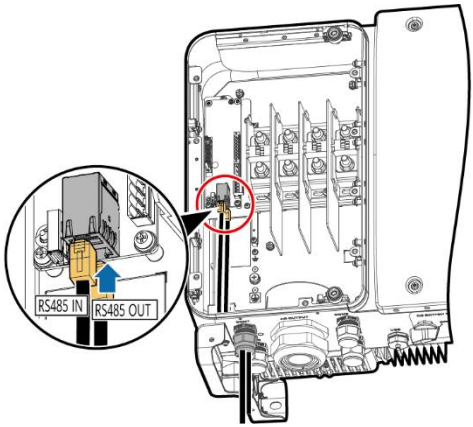

4. Bind the communications cable.

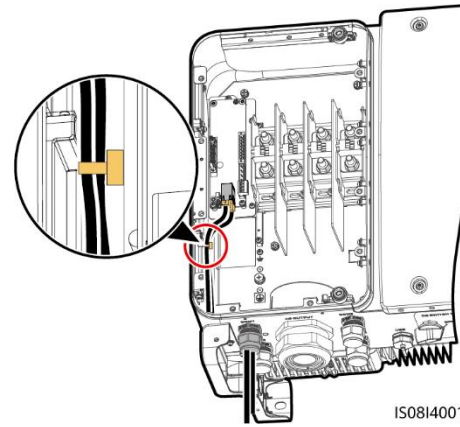

IS08I40013

NOTE

Tie the communication cables with the cables on internal side of the maintenance compartment.

5. Tighten the thread-lock sealing nut and seal the cable gland.

4.7 (Optional) Installing the Solar Tracker Power Cable

The solar tracker power cable can be installed on the SUN2000-65KTL-M0 only.

NOTICE

1. A switch-disconnector-fuse or fuse-switch-disconnector with a voltage of no less than 500 V, current of 16 A, and protection type of gM needs to be installed between the SUN2000 and the tracker controller for protection.
2. The cable between the wiring terminal on the power cable and the switch-disconnector-fuse or fuse-switch-disconnector should be less than or equal to 2.5 meters.

WARNING

Do not place flammable materials around the cable.

1. Remove an appropriate length of the jacket and insulation layer from the solar tracker power cable using a wire stripper. (Ensure that the jacket is in the maintenance compartment.)

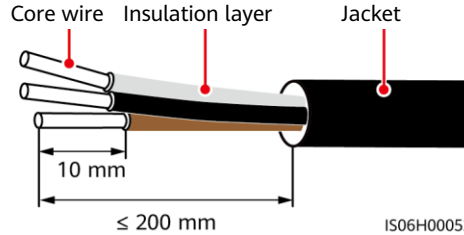

2. Remove the shielding cover from wiring terminals.

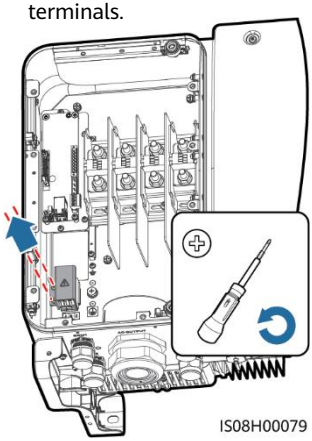

3. Route the cable through the cable gland.

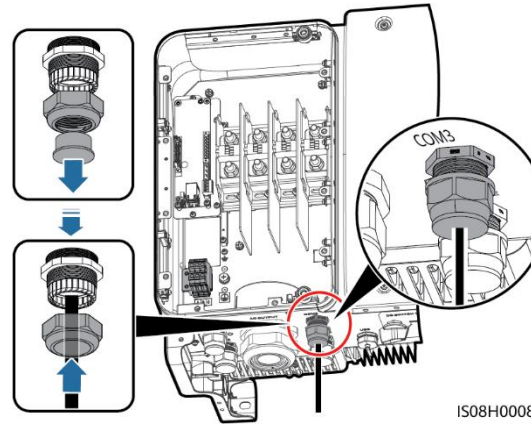

4. Connect the solar tracker power cable.

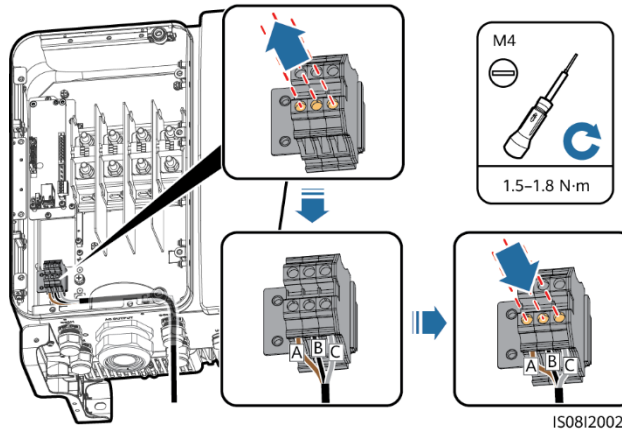

5. Install the shielding cover on wiring terminals.

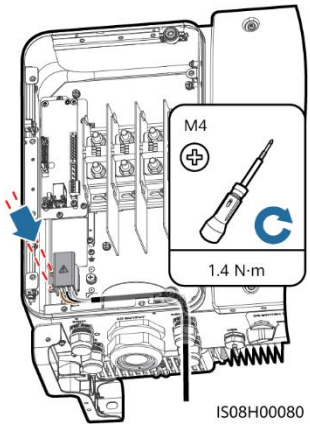

6. Bind the solar tracker power cable.

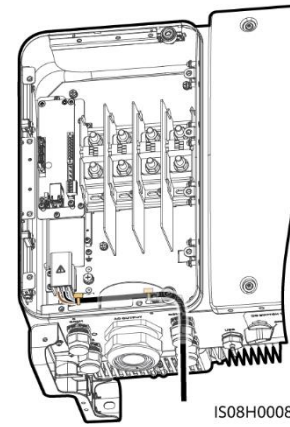

7. Tighten the thread-lock sealing nut and seal the cable gland.

5 Verifying the Installation

1. The SUN2000 is installed correctly and securely.	Yes □ No □ N/A □
2. The DC switches and downstream AC switch are OFF.	Yes □ No □ N/A □
3. All ground cables are connected securely, without open circuits or short circuits.	Yes □ No □ N/A □
4. AC output power cables are connected correctly and securely, without open circuits or short circuits.	Yes □ No □ N/A □
5. DC input power cables are connected correctly and securely, without open circuits or short circuits.	Yes □ No □ N/A □
6. The RS485 communications cable is connected correctly and securely.	Yes □ No □ N/A □
7. Check that all used cable glands at the bottom of the enclosure are sealed, and that the thread-lock sealing nut is tightened.	Yes □ No □ N/A □
8. The AC terminal cover is reinstalled.	Yes □ No □ N/A □
9. The maintenance compartment door is closed and the door screws are tightened.	Yes □ No □ N/A □
10. Unused DC input terminals are sealed.	Yes □ No □ N/A □
11. Unused USB ports are plugged with watertight caps.	Yes □ No □ N/A □
12. Unused cable glands are plugged and the thread-lock sealing nuts are tightened.	Yes □ No □ N/A □

6 Powering On the System

NOTICE

Before turning on the AC switch between the SUN2000 and the power grid, use a multimeter to check that the AC voltage is within the specified range.

1. Turn on the AC switch between the SUN2000 and the power grid.
2. Turn on the DC switches at the SUN2000 bottom.

7 SUN2000 App

NOTE

1. The SUN2000 app is mobile phone app that communicates with the SUN2000 monitoring system over a USB data cable, Bluetooth module, or WLAN module. As a convenient local monitoring and maintenance platform, it supports alarm query, parameter configuration, and routine maintenance. The app name is SUN2000.
2. Log in to Huawei AppGallery (https://appstore.huawei.com), search for SUN2000, and download the app installation package. You can also scan the QR code (https://appgallery.cloud.huawei.com/appdl/C10279542) to download the installation package.
3. Connect a USB data cable, a Bluetooth module, or a WLAN module to the USB port of the SUN2000 to implement the communication between the SUN2000 and the app.

WLAN or Bluetooth Connection

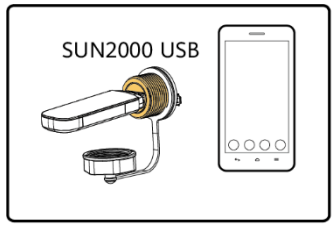

USB Data Cable Connection

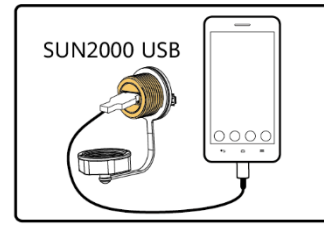

IS07H00020

Login Page

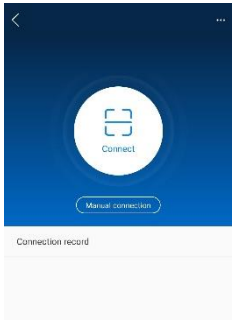

Select Connection Mode

Select User

Quick Settings

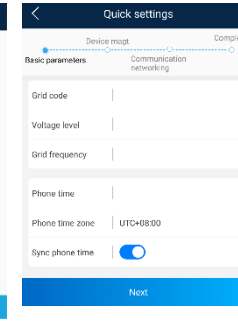

Function Menu

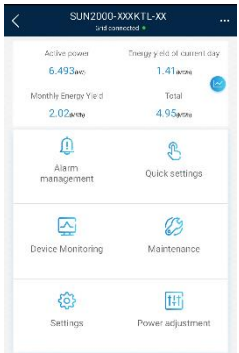

NOTICE

- The screenshots in this document correspond to app version 3.2.00.013 (Android).
- When the WLAN connection is used, the initial name of the WLAN hotspot is ***Adapter-WLAN module SN***, and the initial password is **Changeme**.
- The initial password for **Common User**, **Advanced User**, and **Special User** is **00000a**.
- Use the initial password upon first power-on and change it immediately after login. To ensure account security, change the password periodically and keep the new password in mind. Not changing the initial password may cause password disclosure. A password left unchanged for a long period of time may be stolen or cracked. If a password is lost, devices cannot be accessed. In these cases, the user is liable for any loss caused to the PV plant.
- Set the correct grid code based on the application area and scenario of the solar inverter.

Huawei Technologies Co., Ltd.
Huawei Industrial Base, Bantian, Longgang
Shenzhen 518129 People's Republic of China
www.huawei.com