Manualslib.com - The Global Manuals Library

HUAWEI JUPITER-3000K-H1 USER MANUAL

Quick Links

Storage and Installation Environment Requirements
Electrical Safety
Commissioning
Products Description
Transformer Room
MV Room
Configuration Scenario
Electrical Connections

Table of Contents

About This Document
Table of Contents
Safety Information
General Safety
Personnel Requirements
Transportation Requirements
Storage and Installation Environment Requirements
Electrical Safety
Mechanical Safety
Commissioning
Maintenance and Replacement
Products Description
Overview
Appearance
Label Description
Components
STS
Room
Transformer Room
MV Room
DQS-12/24 (CVC)
DQS-12/24 (DVC)
DQS-36 and DQS-40.5 (CVC)
DQS-40.5 (DVC)
CGM.3 (CVC)
CGM.3 (DVC)
8DJH12/24 (CCV)
8DJH36 (CCV)
8DJH12/24 (DCV)
8DJH36 (DCV)
8DJH38 (DCV)
Configuration Scenario

Electrical Connections

Other ManualsLib Projects

JUPITER-(3000K, 6000K, 9000K)-H1 Smart Transformer Station

User Manual

Issue	Draft A
Date	2022-09-07

HUAWEI TECHNOLOGIES CO., LTD.

Copyright © Huawei Technologies Co., Ltd. 2022. All rights reserved.

No part of this document may be reproduced or transmitted in any form or by any means without prior written consent of Huawei Technologies Co., Ltd.

Trademarks and Permissions

HUAWEI and other Huawei trademarks are trademarks of Huawei Technologies Co., Ltd.
All other trademarks and trade names mentioned in this document are the property of their respective holders.

Notice

The purchased products, services and features are stipulated by the contract made between Huawei and the customer. All or part of the products, services and features described in this document may not be within the purchase scope or the usage scope. Unless otherwise specified in the contract, all statements, information, and recommendations in this document are provided "AS IS" without warranties, guarantees or representations of any kind, either express or implied.

The information in this document is subject to change without notice. Every effort has been made in the preparation of this document to ensure accuracy of the contents, but all statements, information, and recommendations in this document do not constitute a warranty of any kind, express or implied.

Huawei Technologies Co., Ltd.

Address: Huawei Industrial Base
Bantian, Longgang
Shenzhen 518129
People's Republic of China

Website: https://e.huawei.com

About This Document

Purpose

This document describes the appearance, transportation, storage, human-machine interaction, and maintenance of the JUPITER-3000K-H1, JUPITER-6000K-H1, JUPITER-9000K-H1 Smart Transformer Station (also referred to as the STS). Before installing and operating the STS, read through this document to understand the safety precautions and get familiar with the functions and features of the STS.

Figures used in this document are for reference only.

Intended Audience

This document is intended for photovoltaic (PV) plant operating personnel and qualified electricians.

Symbol Conventions

The symbols that may be found in this document are defined as follows.

Symbol	Description
DANGER	Indicates a hazard with a high level of risk which, if not avoided, will result in death or serious injury.
WARNING	Indicates a hazard with a medium level of risk which, if not avoided, could result in death or serious injury.
CAUTION	Indicates a hazard with a low level of risk which, if not avoided, could result in minor or moderate injury.

Copyright © Huawei Technologies Co., Ltd.

Symbol	Description
NOTICE	Indicates a potentially hazardous situation which, if not avoided, could result in equipment damage, data loss, performance deterioration, or unanticipated results. NOTICE is used to address practices not related to personal injury.
NOTE	Supplements the important information in the main text. NOTE is used to address information not related to personal injury, equipment damage, and environment deterioration.

Change History

Changes between document issues are cumulative. The latest document issue contains all the changes made in earlier issues.

Issue 01 (2022-09-07)

This issue is used for first office application (FOA).

Copyright © Huawei Technologies Co., Ltd.

Contents

About This Document ii

1 Safety Information 1

1.1 General Safety 1
1.2 Personnel Requirements 4
1.3 Transportation Requirements 5
1.4 Storage and Installation Environment Requirements 5
1.5 Electrical Safety 7
1.6 Mechanical Safety 8
1.7 Commissioning 11
1.8 Maintenance and Replacement 11

2 Products Description 13

2.1 Overview 13
2.2 Appearance 14
2.3 Label Description 16
2.4 Components 16
2.4.1 STS 17
2.4.2 LV Room 18
2.4.3 Transformer Room 19
2.4.4 MV Room 21
2.4.4.1 DQS-12/24 (CVC) 21
2.4.4.2 DQS-12/24 (DVC) 22
2.4.4.3 DQS-36 and DQS-40.5 (CVC) 23
2.4.4.4 DQS-40.5 (DVC) 24
2.4.4.5 CGM.3 (CVC) 25
2.4.4.6 CGM.3 (DVC) 26
2.4.4.7 8DJH12/24 (CCV) 27
2.4.4.8 8DJH36 (CCV) 28
2.4.4.9 8DJH12/24 (DCV) 29
2.4.4.10 8DJH36 (DCV) 30
2.4.4.11 8DJH38 (DCV) 31
2.5 Configuration Scenario 33

3 Electrical Connections 35

Copyright © Huawei Technologies Co., Ltd.

4 Disposing of the STS.....37

5 Technical Specifications.....38

1 Safety Information

1.1 General Safety

Statement

Before installing, working on, and maintaining the equipment, carefully read this document and observe all safety instructions provided herein and written on the equipment itself.

The information provided under the **NOTICE**, **CAUTION**, **WARNING**, and **DANGER** headings within this manual is not intended to cover all applicable safety policies, but instead acts as a supplement to the comprehensive safety information provided. The Company will not be liable for any consequences that may arise due to violations of general safety requirements or safety standards concerning the design, production, and usage of the equipment.

Ensure that the equipment is used in environments that meet its design specifications. Otherwise, the equipment may become faulty, and any resulting malfunction, component damage, personal injury, or property damage will not be covered under the warranty.

Follow local laws and regulations when installing, working on, or maintaining the equipment. The safety instructions in this document are considered extra information in addition to local laws and regulations.

The Company will not be liable for any consequences in any of the following circumstances:

- Installation or use in environments which are not specified in relevant international, national, or local standards
- Operation beyond the conditions specified in this document
- Unauthorized modifications to the product or software code or removal of the product
- Failure to follow the operation instructions or safety precautions on the product or in this document
- Equipment damage due to force majeure, such as earthquakes, fires, storms, floods, and debris flows

 Copyright © Huawei Technologies Co., Ltd.

- Damage during transportation by the customer due to failure to comply with transportation requirements
- Storage conditions that do not meet the requirements specified in this document

General Requirements

DANGER

Improper operations on high-voltage equipment may cause an electric shock, which could result in death, serious injury, or serious property damage. Comply with the following precautions:

- Observe the operation procedures and safety precautions provided in this manual and other related documents.
- Observe the safety precautions specified in the warning signs and labels on the equipment.
- Use correct tools properly as required in this manual.
- Observe the safety regulations of the plant, such as the work ticket mechanism.
- Only personnel who need to work on the equipment are allowed to access the equipment. Install temporary warning signs or fences before working on the equipment.
- The warning signs and protection labels on the equipment must be clear and prominent. Do not alter, damage, or block them. Replace the signs and labels promptly if damaged.
- Do not perform installation, cable connection, maintenance, or replacement when the equipment is energized.
- Do not use water to clean electrical components in the equipment.
- When the system is running, do not open the cabinet doors or sealing plates in the energized area.
- Check the equipment for any damage, such as holes, dents, or other signs of internal damage.
- Check that the preinstalled cables are securely connected.
- Ensure that the components in the equipment are not displaced. Do not alter the equipment structure or installation procedures without permission.
- Do not power on the equipment before it is installed or confirmed by professionals.
- Before touching a conductor surface or terminal, measure the voltage at the contact point. Ensure that the equipment or components to be repaired are properly grounded to avoid electric shocks.
- If any liquid is found inside the equipment, immediately press the emergency stop button and contact the onsite management personnel.
- When you power on the system for the first time or perform operations on the main loop with power on, wear arc protection clothes.

Copyright © Huawei Technologies Co., Ltd.

WARNING

- During transportation, turnover, installation, cable connection, and maintenance, comply with the national and local laws, regulations, and applicable standards.
- Ensure that the materials and tools prepared by the customer comply with the national and local laws, regulations, and applicable standards.
- Obtain approval from the national or local electric utility company before connecting the equipment to the grid.

CAUTION

- Do not install other devices on the top of the equipment without the permission of the Company.
- Do not perform operations such as arc welding, drilling, or cutting on the equipment. Such operations may damage the container airtightness, equipment electromagnetic containment, internal components, and cables. Metal scraps generated during such operations may enter the equipment, which will cause short circuits on circuit boards, affect equipment functions, or damage the equipment.
- Do not touch any area where a burn warning sign is attached to prevent burn hazard.
- Repaint any scratched surfaces caused during equipment transportation or installation in a timely manner. Scratched equipment surface should not be exposed to an outdoor environment for extended periods.
- The keys to the door locks of the medium-voltage room, low-voltage room, and transformer room must be properly kept. Unauthorized personnel are not allowed to work on the equipment.
- After installing the equipment, clear away packing materials such as cartons, foam, plastics, and cable ties from the equipment area.
- When performing operations (such as hoisting) over the top of the equipment, take measures to protect the equipment against damage. After the operations are complete, check whether the protective paint is damaged. If yes, repair the paint in a timely manner.
- If there is a likelihood of personal injury or equipment damage during operations, immediately stop the operation, report the case to the supervisor, and take feasible protective measures.
- The equipment has an arc discharge channel for the medium-voltage room. Install the equipment according to the equipment foundation diagram and ensure that the gap between the medium-voltage room and the foundation is filled with materials such as mortar.
- During the operation and maintenance of the equipment, if you need to leave temporarily, close and lock the cabinet doors.

Copyright © Huawei Technologies Co., Ltd.

NOTICE

Before opening container doors during the installation, operation, and maintenance of the equipment, clean up any water, ice, snow, or other foreign objects on the top of the container to prevent foreign objects from falling into the container.

NOTE

Do not perform reverse engineering, decompilation, disassembling, disassembly, adaptation, implantation, or other derivative operations on the equipment software. Do not study the internal implementation of the equipment, obtain the source code of the equipment software, steal intellectual property rights, or disclose any of the performance test results of the equipment software.

1.2 Personnel Requirements

- Only qualified personnel or companies are allowed to work on the equipment. When working on the equipment, wear personal protective equipment (PPE) that meet local safety protection requirements.

Figure 1-1 Wearing protective equipment

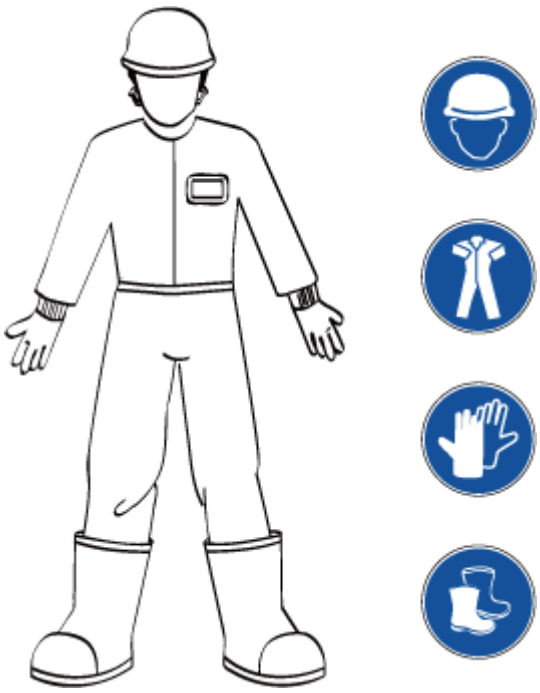

- During transportation, turnover, installation, cable connection, and maintenance, comply with the national and local laws, regulations, and applicable standards.
- Maintenance personnel must be familiar with the structure and working principles of the entire system, and perform operations according to the manual.

Copyright © Huawei Technologies Co., Ltd.

1.3 Transportation Requirements

- Select proper transportation tools according to the dimensions and weight of the product.
- When stacking containers, determine the maximum number of stacking layers based on the specifications on the containers. Place the containers neatly to prevent personal injury or device damage caused by toppling.
- Place the product horizontally during transportation.
- Prevent the product from colliding or scratching.
- Requirements for road transportation: Before transporting, conduct road survey to identify any obstacles in the transportation route to ensure that the vehicle can pass through the route safely. Survey information: road condition, height limit, actual height, width limit, actual width, weight limit, traffic restrictions, and obstacles.
- Requirements for waterway transportation: The waterway must meet the requirements of full-load voyage.

1.4 Storage and Installation Environment Requirements

Storage Requirements

- The container doors are closed tightly.
- The temperature and humidity of the storage environment are proper. Otherwise, the equipment may be damaged.

Figure 1-2 Storage temperature and humidity

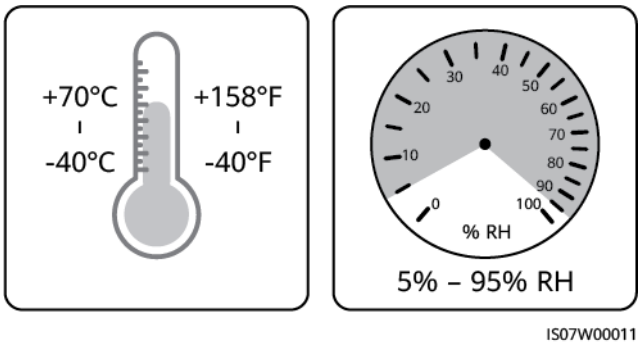

- The storage environment must be clean and dry.
- For extended periods of storage, place silica gel moisture absorbent packs in the medium-voltage room and low-voltage room based on the site environment, and check and replace the silica gel moisture absorbent packs on a regular basis.
- After extended periods of storage, test the equipment in accordance with local laws and regulations and applicable standards before use.

Copyright © Huawei Technologies Co., Ltd.

Installation Environment Requirements

The equipment is installed outdoors. The site selection requirements are as follows:

- The equipment is heavy. Ensure that the installation surface is solid enough to bear the weight of the equipment.
- The site is not located in a low-lying land. The horizontal level of the site is above the highest water level of that area in history.
- The ground is solid without spongy or soft soil, and is not prone to water accumulation or subsidence.
- The site is located in a well-ventilated area.
- The site is far away from sources of strong variation, loud noises, and strong electromagnetic interference.
- The site is not above any underground facilities.
- The site must be a class C or higher environment but not a class D or E environment.
- The site is far away from dust, cooking fume, harmful gases, and corrosive, flammable, or explosive objects.
- The site is in an open area and at least 10 m away from any obstacles in all directions.
- The site is at least 50 m away from residential areas.
- The site temperature is within the range of –25°C to +60°C. If the temperature exceeds 55°C, the equipment must be installed in a shaded area.
- If the equipment is installed in a place with dense vegetation, in addition to routine weeding, harden the ground under the equipment to prevent weeds from growing.

NOTE

- Class C environment: Outdoor areas more than 500 m away from the sea. If a site is near a pollution source, it must be 1500–3000 m away from heavy pollution sources, such as smelteries, coal mines, and thermal power plants; 1000–2000 m away from medium pollution sources such as chemicals, rubber, and galvanization; or 500–1000 m away from light pollution sources, such as packing houses, tanneries, boiler rooms, slaughterhouses, landfill sites, and sewage treatment plants.
- Class D environment: Sea environments or outdoor areas within 500 m away from the sea. If a site is near a pollution source, it is within 1500 m away from heavy pollution sources such as smelteries, coal mines, and thermal power plants, within 1000 m away from medium pollution sources such as chemical, rubber, and galvanization industries, or within 500 m away from light pollution sources such as packing houses, tanneries, boiler rooms, slaughterhouses, landfill sites, and sewage treatment plants.
- Class E environment: Special environments, such as underground or underwater environments.

Copyright © Huawei Technologies Co., Ltd.

1.5 Electrical Safety

Cabling

- Do not perform any improper operations, for example, dropping cables directly from a vehicle.
- Do not route cables through air intake or exhaust vents of the equipment.
- Bind cables of the same type together. When routing cables of different types, ensure that they are at least 30 mm away from each other.
- When routing cables, reserve at least 30 mm clearance between the cables and heat-generating components or areas. This prevents deterioration or damage to the cable insulation layer.
- Select cables that comply with local laws and regulations.
- The positions where cables are routed through pipes or holes must be protected to prevent the cables from being cut by sharp edges.
- Ensure that the cables are properly connected and insulated, and meet specifications.
- After connecting medium-voltage and low-voltage cables, secure them using cable supports and cable clips. Ensure that the cables in the backfill area are in close contact with the ground to prevent cable deformation or damage during backfilling.
- When the temperature is low, violent impact or vibration may damage the plastic cable sheathing. To ensure safety, comply with the following requirements:
  - Cables can be laid or installed only when the temperature is higher than 0°C. Handle cables with caution, especially at a low temperature.
  - Cables stored at subzero temperatures must be stored at room temperature for at least 24 hours before they are laid out.

Grounding

- Do not damage the ground conductor.
- Do not work on the equipment in the absence of a properly installed ground conductor.
- For the equipment that needs to be grounded, install the ground cable first when installing the equipment and remove the ground cable last when removing the equipment.
- The main grounding body of the equipment must be permanently connected to the grounding grid. Before working on the equipment, check its electrical connections to ensure that it is reliably grounded.

Safety Requirements in Maintenance and Repair

1. Before connecting or removing cables, turn off the protection switch of the corresponding loop.
2. Place a warning sign indicating that the switch must not be turned on at the position where the switch resides.

Copyright © Huawei Technologies Co., Ltd.

3. Use an electroscope of a proper voltage level to check whether the equipment is energized and ensure that the equipment is completely powered off.
4. If charged bodies are found nearby, block or wrap them with insulation plates or insulation tapes.
5. Before performing maintenance and repair, securely connect the loop to be repaired to the main ground loop using a ground cable.

NOTICE

- Before connecting a cable, check that the labels on it are correct.
- If the equipment has multiple inputs, disconnect all the inputs before working on the equipment.

6. After the maintenance or repair is complete, remove the ground cable between the loop that has been maintained and the main ground loop.

1.6 Mechanical Safety

Hoisting

- Before hoisting, check the hoisting tools. Do not use damaged or unqualified hoisting tools.
- Before hoisting objects, ensure that hoisting tools are firmly secured onto a fixed object or wall that meets the load-bearing requirements.
- Do not drag steel ropes or hoisting tools and prevent them from bumping into the equipment.
- During hoisting, do not stand or walk under the crane or the hoisted objects.
- Install temporary warning signs or fences to isolate the hoisting area.
- Ensure that the angle between two hoisting ropes is no more than 90 degrees.

Copyright © Huawei Technologies Co., Ltd.

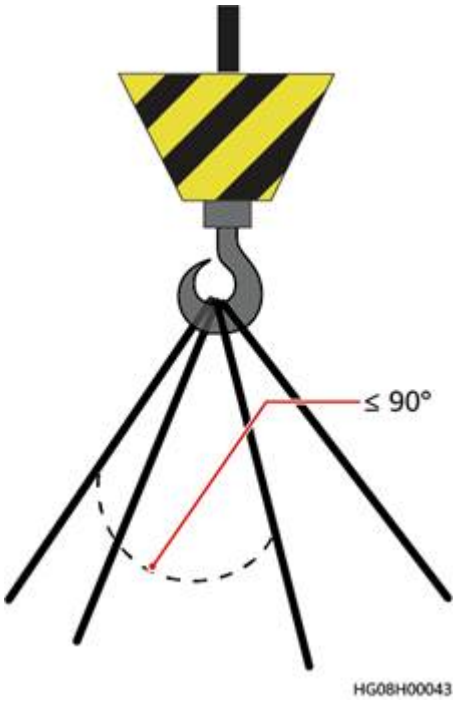

Using Ladders

- Before using a ladder, ensure that it is intact and its load bearing capacity is adequate. Do not load a ladder with a weight in excess of its duty rating.
- Use wooden or fiberglass ladders when you need to perform live-line working at heights.
- Platform ladders with protective rails are preferred. The ladder must be secured at the four feet and held by a person.
- When a step ladder is used, ensure that the pull ropes are secured and the ladder is held firm by a person.
- If a straight ladder is used, the ladder must be placed in a secure place. The recommended angle for a ladder against the floor is 75 degrees, as shown in the following figure. An angle ruler can be used to measure the angle. Ensure that the wider end of the ladder is at the bottom, or protective measures have been taken at the bottom to prevent the ladder from sliding. The ladder must be held by another person during the operation.

 Copyright © Huawei Technologies Co., Ltd.

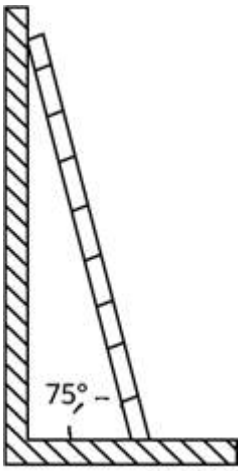

- When climbing a ladder, take the following precautions to reduce risks and ensure safety:
  - Keep your body steady.
  - Do not climb higher than the fourth rung of the ladder from the top.
  - Keep your center of gravity between the side rails, and do not overreach to the sides.

Safety When Drilling Nearby the Equipment

- Drill holes at proper positions to ensure that no short circuit is caused.
- Wear protective equipment such as safety goggles and protective gloves when drilling holes.
- When drilling holes, protect the equipment from shavings. After drilling, clean up any shavings.

Moving Heavy Objects

- When moving heavy objects, ensure that the number of operators must meet the requirements in the following figure and make proper preparations.

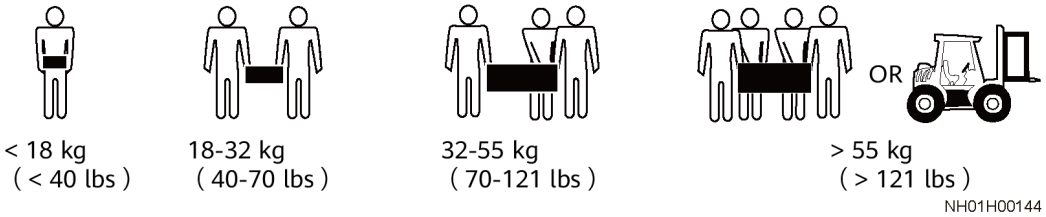

- Wear protective gloves and anti-smashing shoes when manually moving the equipment.
- Do not scratch the equipment surface or damage components or cables when moving the equipment.
- When transporting the equipment using a forklift truck, ensure that the forks are properly positioned so that the equipment does not topple. Before moving the equipment, secure it to the forklift truck using ropes. When moving the equipment, assign dedicated personnel to take care of it.
- Move the equipment with caution to prevent collision or fall.

Copyright © Huawei Technologies Co., Ltd.

1.7 Commissioning

After the equipment is powered on for the first time, ensure that the parameters are set correctly by professional personnel. Incorrect parameter settings may result in noncompliance with local grid connection requirements and affect the normal operations of the equipment.

1.8 Maintenance and Replacement

CAUTION

Before removing a component from the cabinet, ensure that other components on the cabinet are secure.

NOTICE

- After the equipment stops running, wait for at least 10 minutes to ensure that the voltage is in the safe range. Before maintenance or repair, ensure that the transfer switch is turned to the ground position, the potential indicator is off, the grounding switch of cabinet V in the ring main unit is turned on, and the low-voltage cabinet is grounded.
- During maintenance, turn off the air circuit breaker on the low-voltage side and the switch on the high-voltage side of the equipment, and place warning signs indicating that the switches must not be turned on. If the equipment supports the automatic mode, disable the automatic mode to ensure that the equipment will not be powered on unexpectedly.

- Do not open container doors in adverse weather conditions such as rain, snow, lightning, or dust storms.
- When the transformer is running with power on, do not operate the no-load voltage regulating switch, do not remove the high/low-voltage tubes, and do not connect cables or copper bars.
- Before a fan is powered off and stops rotating, do not touch spinning fan blades with any objects, such as your fingers, components, screws, and tools.
- In the case of a fire, immediately leave the building or the equipment area and activate the fire alarm or call emergency services. Do not enter a building or equipment area that is on fire.
- Wear high-voltage insulation gloves, a safety helmet, insulation shoes, and insulation clothes when working on or maintaining the equipment. Stand on an insulation stool or ladder when commissioning or operating the control panel of the ring main unit.
- Ensure that the lighting device (when needed) provides adequate lighting to illuminate the area you are checking.
- Do not power on the equipment before a fault is rectified.

Copyright © Huawei Technologies Co., Ltd.

- Before maintaining the equipment, ensure that the switches on the low-voltage and high-voltage sides of the equipment are turned off, and the grounding switch of the circuit breaker cabinet on the medium-voltage side is turned on.
- If a switch needs to be turned off for maintenance, place a warning sign indicating that the switch must not be turned on.

Copyright © Huawei Technologies Co., Ltd.

2 Products Description

2.1 Overview

Functions

An STS converts low-voltage (LV) AC power generated by solar inverters into medium-voltage (MV) AC power and feeds it into a power grid.

It is a steel-structure container that houses devices include the LV cabinet, transformer, ring main unit, and auxiliary power supply to provide a highly integrated power transformation and distribution solution for utility-scale PV plants in MV grid-connection scenarios.

Networking

The STS applies to grid-connected large PV plants. A typical grid-connected PV system consists of PV strings, SUN2000 solar inverters, switch boxes, and an STS.

Figure 2-1 PV-only

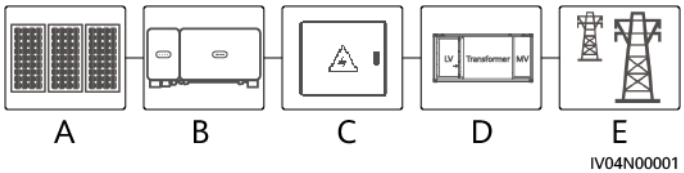

(A) PV string	(B) SUN2000 solar inverter	(C) Switch box (optional)
(D) STS	(E) Power grid	-

Copyright © Huawei Technologies Co., Ltd.

2.2 Appearance

Figure 2-2 Appearance

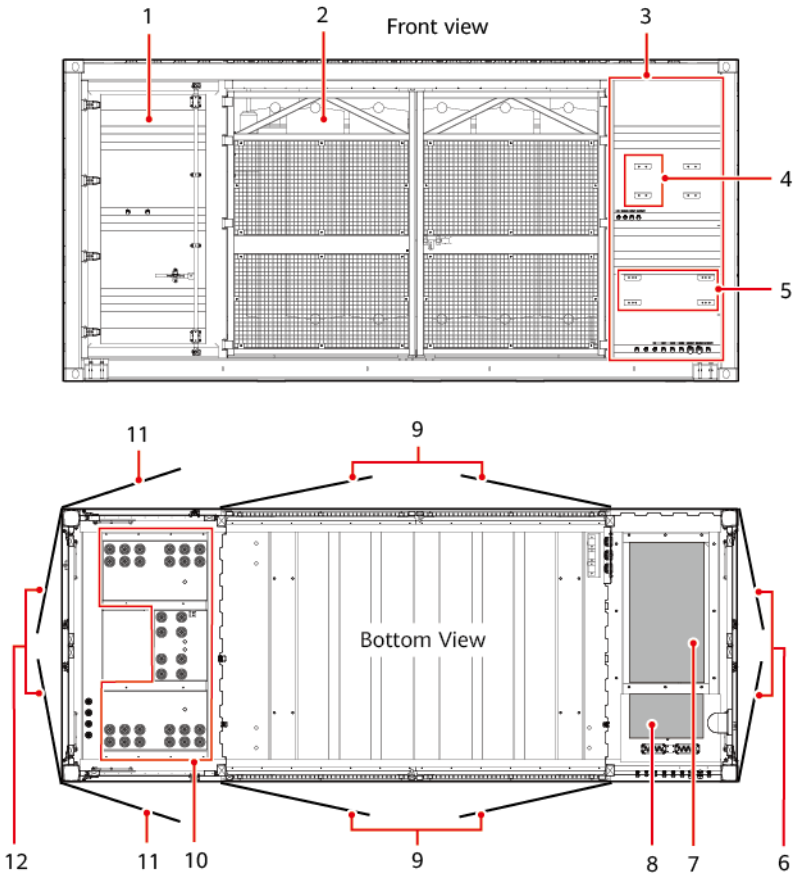

(1) Low-voltage room (LV)	(2) Transformer room (TR)	(3) MV room (MV)
(4) Installation position for the UPS	(5) Installation position for the Smart Array Controller (SACU)	(6) Double-swing door for the MV room
(7) Ring main unit	(8) Auxiliary transformer	(9) Double-swing screen door for the TR room
(10) Holes for AC output power cables	(11) Single-swing door for the LV room	(12) Double-swing door for the LV room

Copyright © Huawei Technologies Co., Ltd.

Figure 2-3 Container dimensions

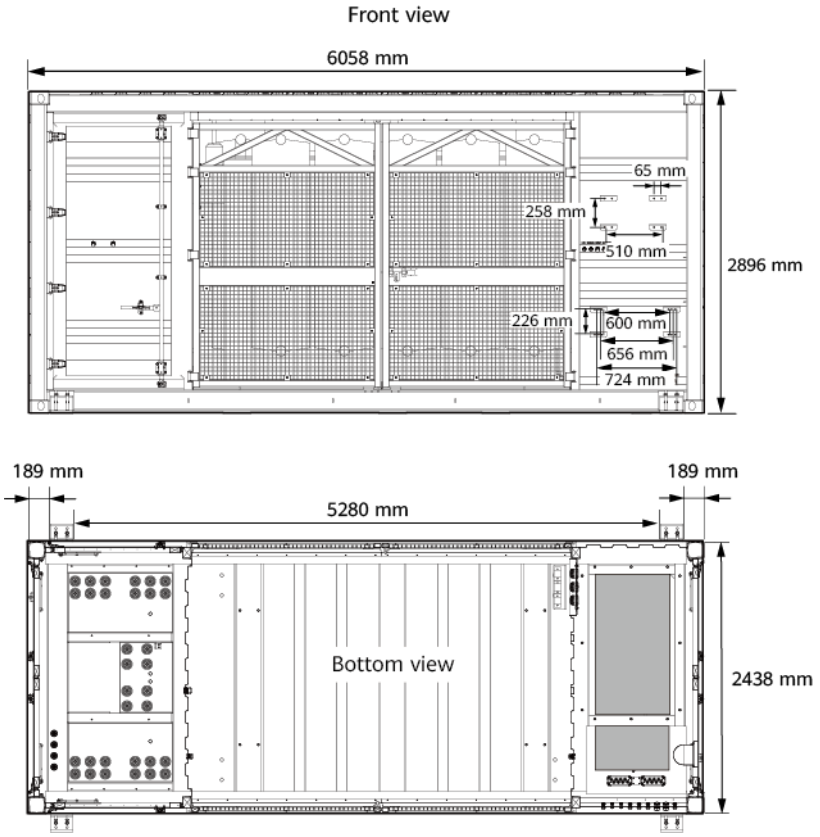

Figure 2-4 Dimensions of an anchor pad

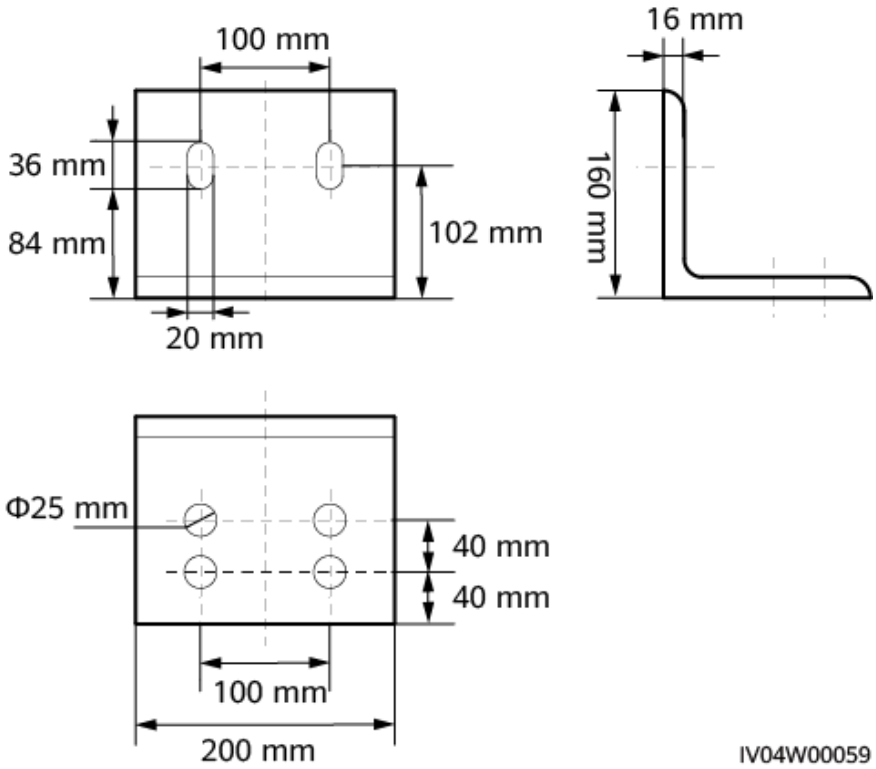

Copyright © Huawei Technologies Co., Ltd.

2.3 Label Description

Symbol	Name	Meaning
	Electric shock warning	The equipment operates at high voltage. Only qualified and trained electrical technicians are allowed to install and operate the equipment.
	Grounding	Indicates the position for connecting the protective earthing (PE) cable.
	Height label	The equipment is high. You may need tools such as an insulation stool or a step ladder to facilitate operation.
HW*U 000000 0	Box No. label	Displays the equipment box No.

2.4 Components

Copyright © Huawei Technologies Co., Ltd.

2.4.1 STS

Figure 2-5 STS components

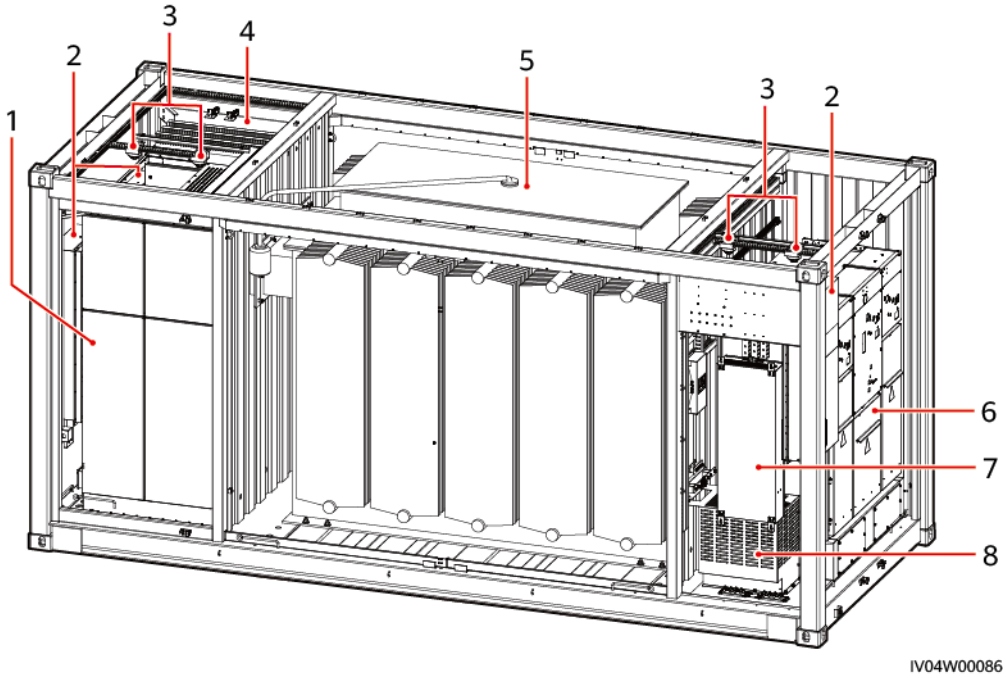

(1) LV PANEL A	(2) Heat exchangers	(3) Smoke sensors
(4) LV PANEL B	(5) Transformer	(6) Ring main unit
(7) Power distribution box	(8) Auxiliary transformer	-

Copyright © Huawei Technologies Co., Ltd.

2.4.2 LV Room

Figure 2-6 LV PANEL front view

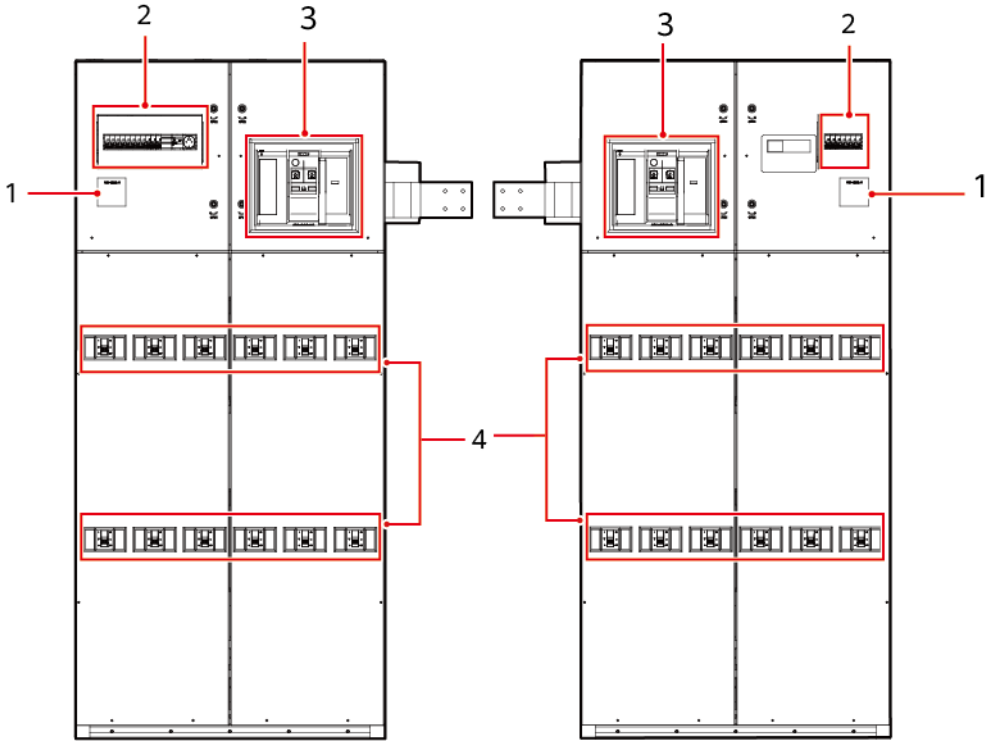

(1) Multimeters (MULTIFUNCTION METER, optional)	(2) Miniature circuit breakers	(3) Air circuit breakers
(4) AC input switches	-	-

Copyright © Huawei Technologies Co., Ltd.

Figure 2-7 LV room interior

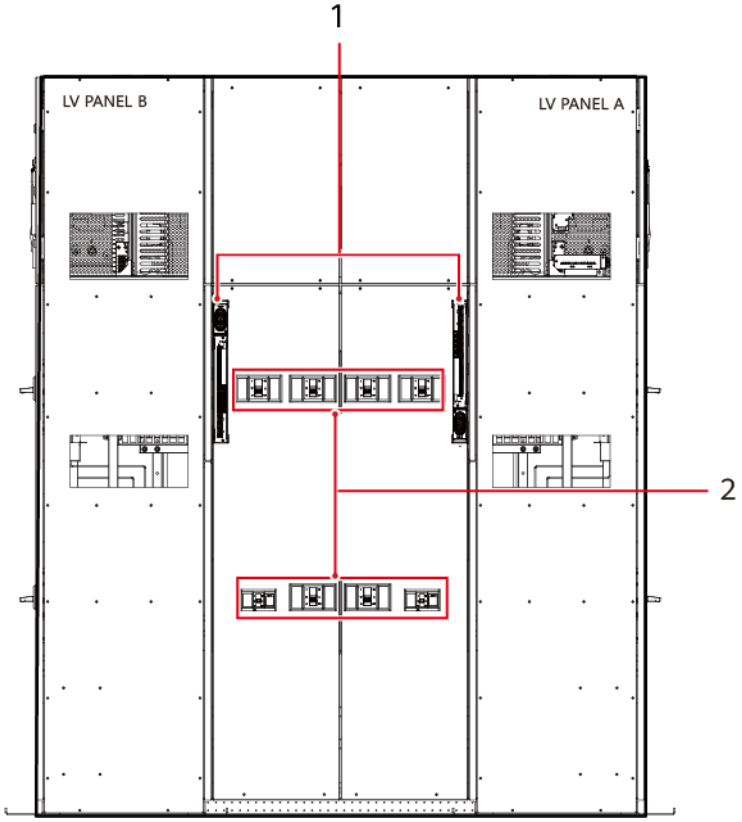

(1) Measurement and Control Modules (2) AC input switches

2.4.3 Transformer Room

The transformer room converts the LV AC power into the MV AC power. The main equipment is a transformer configured with gas, oil temperature, pressure, and oil level protection devices. At the same time, a comprehensive protection device is configured in the MV room for the transformer.

This document uses one type of transformer as an example. The appearance of transformers of different models may vary.

Copyright © Huawei Technologies Co., Ltd.

Figure 2-8 Transformer

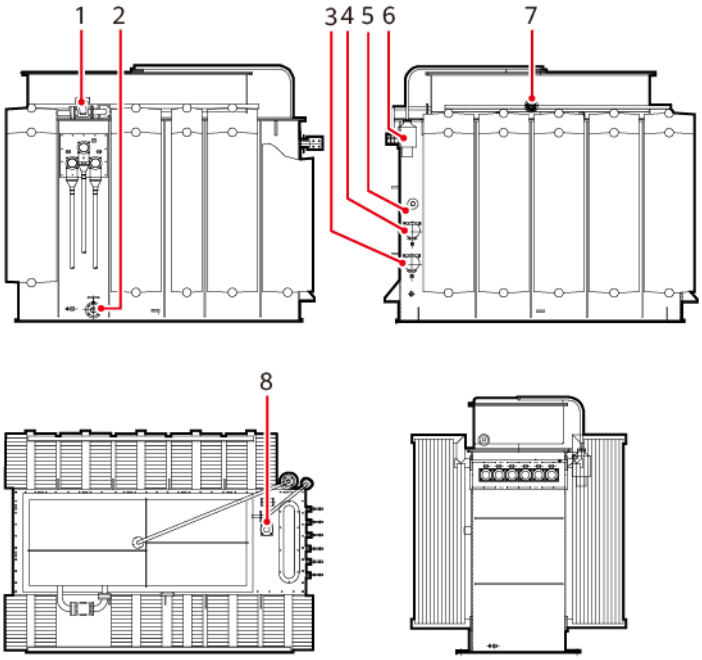

No.	Name	Function	Description
1	Gas relay	Generates a gas accumulation alarm or an oil flow trip.	• When a minor fault occurs on the transformer, the oil of the transformer generates gas. The gas will rise and enter the gas relay. In this case, the reed switch contact for gas accumulation will be closed to send signals. When there is too much gas, it can be released through the gas nozzle of the gas relay. • When there is a strong gas flow in the transformer, the reed switch contact for oil flow will be closed and the circuit breaker of the ring main unit will trip.
2	Oil feed and drain valve	Refills or drains oil.	• Oil refilling: Refills the transformer oil using an uncontaminated metal or non-rubber hose and oil injection equipment. (Note: Prevent air from entering.) • Oil draining: Lead the transformer oil to a container using an uncontaminated metal or non-rubber hose.
3	Oil temperature indicator	Measures and controls the temperature of the top layer of transformer oil.	Displays the top layer of transformer oil in real time and issues alarms and trip signals through the built-in temperature control switch.

Copyright © Huawei Technologies Co., Ltd.

No.	Name	Function	Description
4	(Optional) Winding thermostat	Measures and controls the transformer winding temperature through thermal simulation by measuring the top oil temperature.	The transformer winding temperature is displayed through thermal simulation technology, and the alarm and trip signals are transmitted through the temperature control switch.
5	Off-load tap changer	Regulates the voltage.	There are five levels. Level 1 indicates the maximum tapping value, level 3 indicates the rated tapping value, and level 5 indicates the minimum tapping value.
6	Dehydrating breather	-	The insulation oil in the conservator is connected to the atmosphere through a dehydrating breather with silica gel to absorb moisture and impurities in the air and maintain the performance of the insulation oil.
7	Oil level gauge	Indicates the oil level.	Indicates the oil level of the transformer oil cabinet and reports the alarms of high and low oil levels.
8	Pressure release valve	Releases pressure.	If a transformer is faulty, a large amount of gas is generated, and the pressure of the insulation oil increases sharply. When the certain threshold is reached, the transformer oil is discharged and the internal pressure of the transformer decreases to a normal value. At the same time, a signal is sent to trip the circuit breaker in the ring main unit.

2.4.4 MV Room

For details about the ring main unit, see the ring main unit manual provided by the manufacturer. See the ring main unit model on the nameplate.

2.4.4.1 DQS-12/24 (CVC)

NOTE

No cable connector is installed in cabinet G1 or G3. The cable connectors in the figure are for reference only. The actual position and dimensions may vary.

Copyright © Huawei Technologies Co., Ltd.

Figure 2-9 DQS-12/24 (CVC)

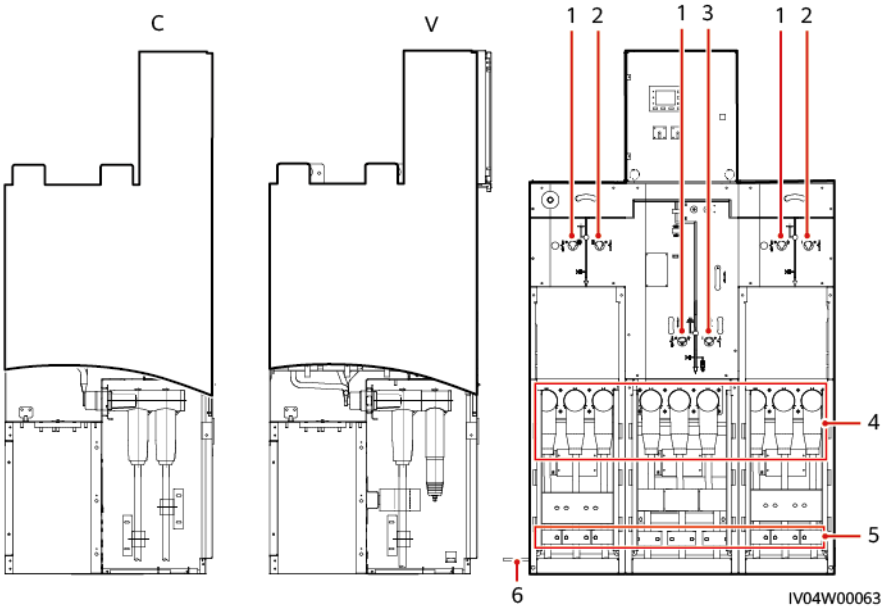

(1) Operation holes of grounding switches
(2) Load switch operation holes
(3) Isolation switch operation hole
(4) Cable connectors
(5) Cable clips
(6) Ground bar

2.4.4.2 DQS-12/24 (DVC)

NOTE

No cable connector is installed in cabinet G1 or G3. The cable connectors in the figure are for reference only. The actual position and dimensions may vary.

Copyright © Huawei Technologies Co., Ltd.

Figure 2-10 DQS-12/24 (DVC)

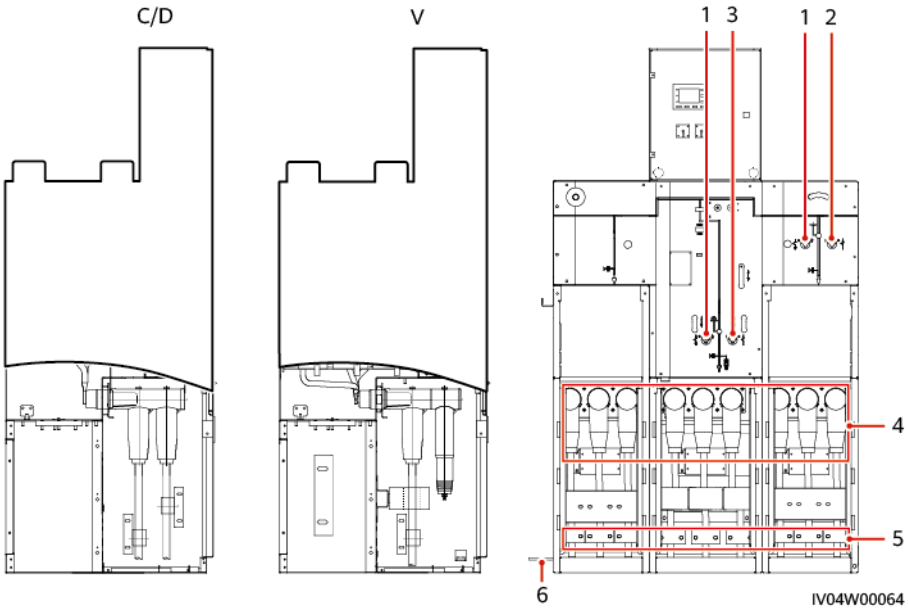

(1) Operation holes of grounding switches
(2) Load switch operation holes
(3) Isolation switch operation hole
(4) Cable connectors
(5) Cable clips
(6) Ground bar

2.4.4.3 DQS-36 and DQS-40.5 (CVC)

NOTE

No cable connector is installed in cabinet G1 or G3. The cable connectors in the figure are for reference only. The actual position and dimensions may vary.

Copyright © Huawei Technologies Co., Ltd.

Figure 2-11 DQS-36 and DQS-40.5 (CVC)

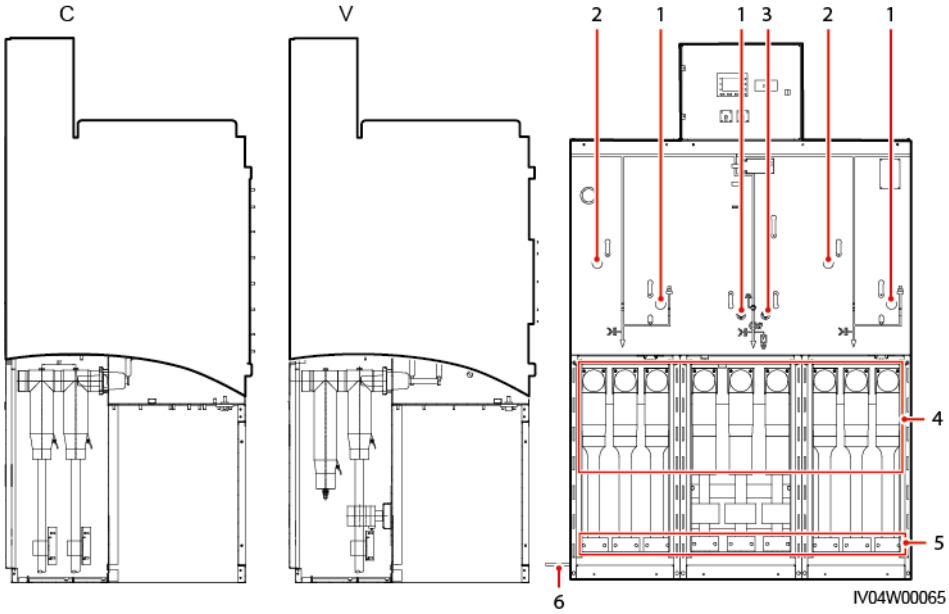

(1) Operation holes of grounding switches
(2) Load switch operation holes
(3) Isolation switch operation hole
(4) Cable connectors
(5) Cable clips
(6) Ground bar

2.4.4.4 DQS-40.5 (DVC)

NOTE

No cable connector is installed in cabinet G1 or G3. The cable connectors in the figure are for reference only. The actual position and dimensions may vary.

Copyright © Huawei Technologies Co., Ltd.

Figure 2-12 DQS-40.5 (DVC)

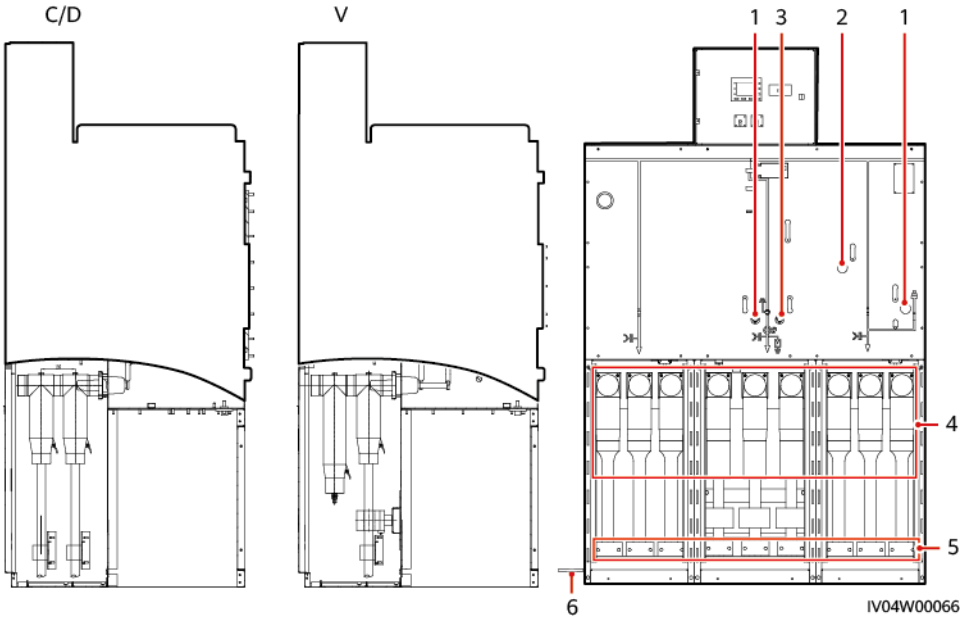

(1) Operation holes of grounding switches	(2) Load switch operation holes	(3) Isolation switch operation hole
(4) Cable connectors	(5) Cable clips	(6) Ground bar

2.4.4.5 CGM.3 (CVC)

NOTE

No cable connector is installed in cabinet G1 or G3. The cable connectors in the figure are for reference only. The actual position and dimensions may vary.

Copyright © Huawei Technologies Co., Ltd.

Figure 2-13 CGM.3 (CVC)

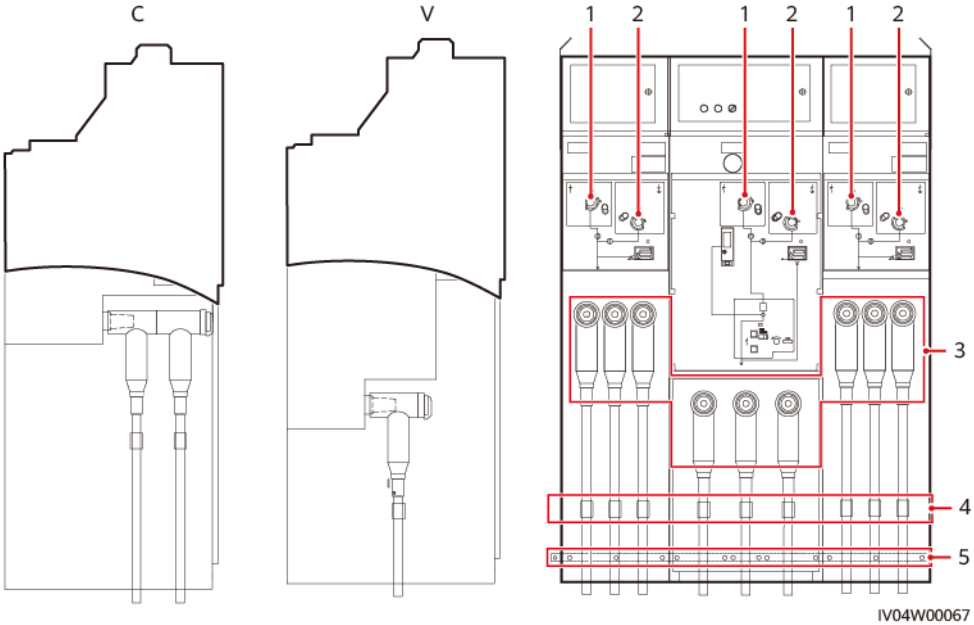

(1) Load switch operation holes	(2) Grounding switch operation holes	(3) Cable connectors
(4) Cable clips	(5) Ground bar	-

2.4.4.6 CGM.3 (DVC)

NOTE

No cable connector is installed in cabinet G1 or G3. The cable connectors in the figure are for reference only. The actual position and dimensions may vary.

Copyright © Huawei Technologies Co., Ltd.

Figure 2-14 CGM.3 (DVC)

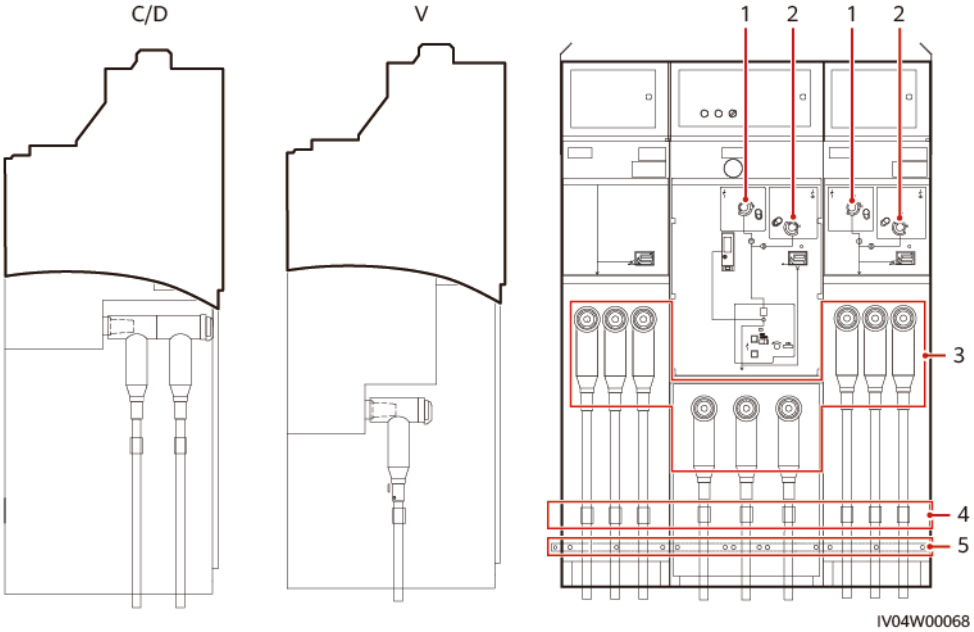

(1) Load switch operation holes	(2) Grounding switch operation holes	(3) Cable connectors
(4) Cable clips	(5) Ground bar	-

2.4.4.7 8DJH12/24 (CCV)

NOTE

- The CCV ring main unit includes a circuit breaker cabinet and two load switch cabinets.
- The secondary room of the ring main unit cannot be opened when the power is on.

Copyright © Huawei Technologies Co., Ltd.

Figure 2-15 8DJH12/24 (CCV)

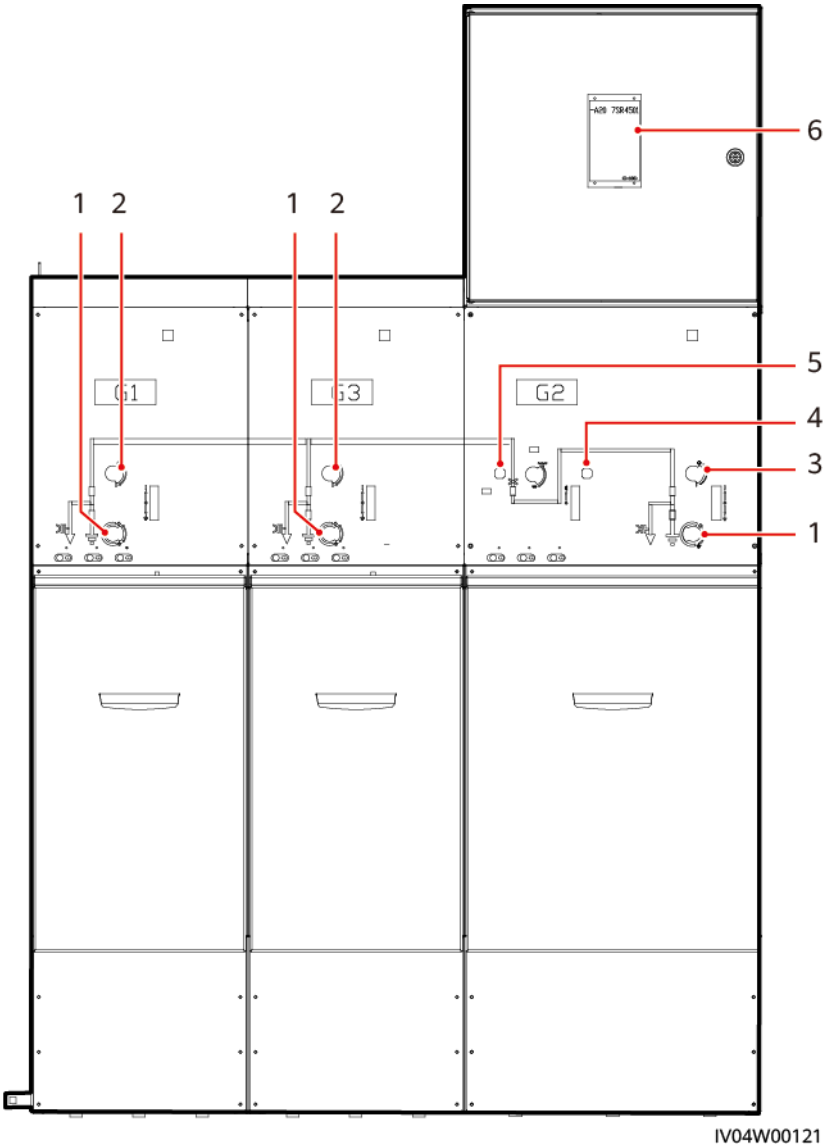

(1) Manual grounding	(2) Manual load disconnection	(3) Isolator
(4) Manually switching off the circuit breaker	(5) Manually switching on the circuit breaker	(6) Relay

2.4.4.8 8DJH36 (CCV)

NOTE

- The CCV ring main unit includes a circuit breaker cabinet and two load switch cabinets.
- The secondary room of the ring main unit cannot be opened when the power is on.

Copyright © Huawei Technologies Co., Ltd.

Figure 2-16 8DJH36 (CCV)

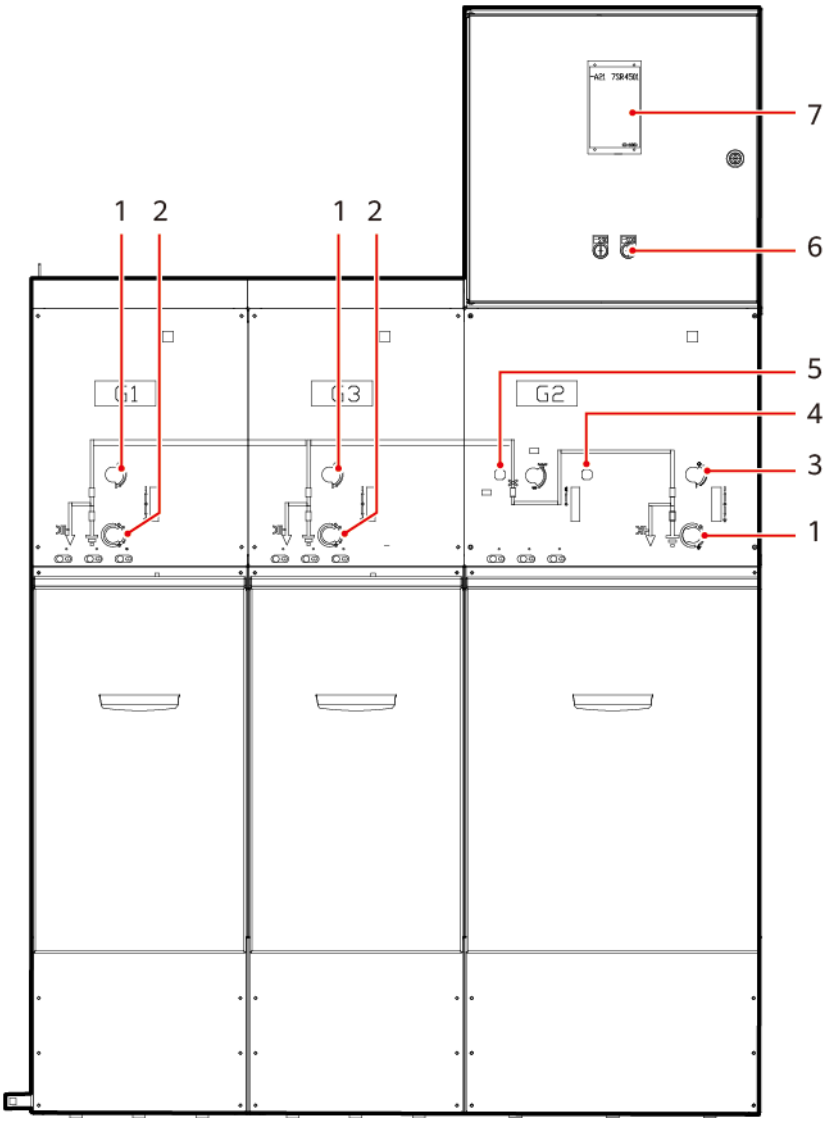

(1) Manual load disconnection	(2) Manual grounding	(3) Disconnector
(4) Manually switch off the circuit breaker	(5) Manually switch on the circuit breaker	(6) Circuit breaker electrical control switch
(7) Relay	-	-

2.4.4.9 8DJH12/24 (DCV)

NOTE

- The DCV ring main unit includes a direct cable entry cabinet, a load switch cabinet, and a circuit breaker cabinet.
- The secondary room of the ring main unit cannot be opened when the power is on.

Copyright © Huawei Technologies Co., Ltd.

Figure 2-17 8DJH12/24 (DCV)

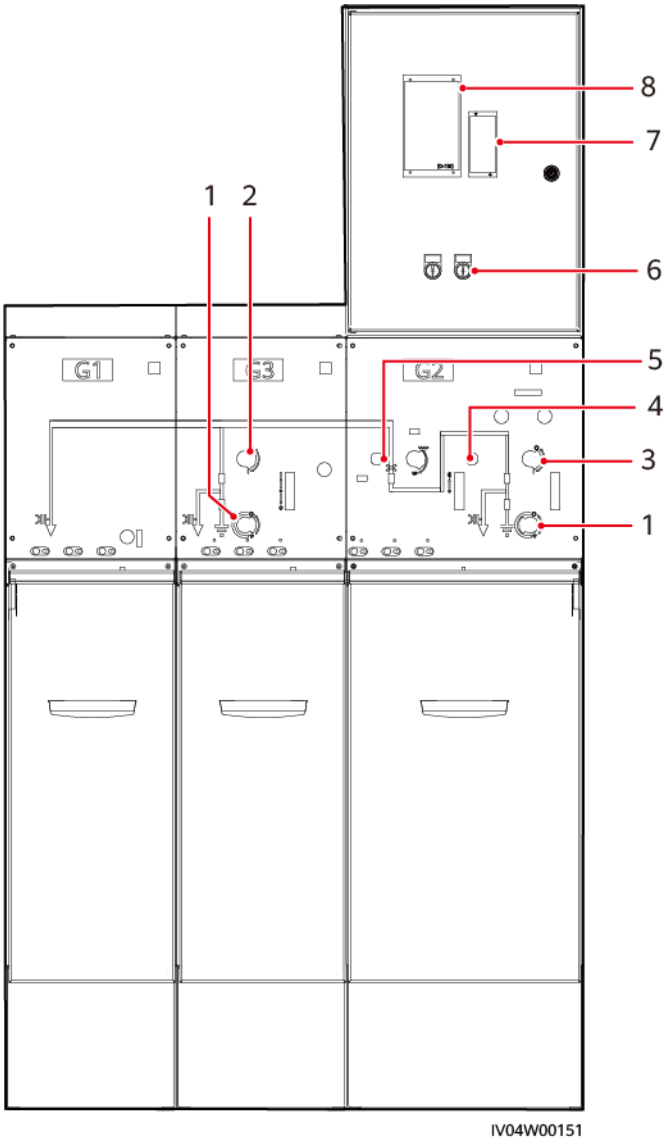

(1) Manual grounding	(2) Manual load disconnection	(3) Disconnector
(4) Manually switch off the circuit breaker	(5) Manually switch on the circuit breaker	(6) Circuit breaker electrical control switch
(7) Temperature and humidity controller (Optional)	(8) Relay	-

2.4.4.10 8DJH36 (DCV)

NOTE

- The DCV ring main unit includes a direct cable entry cabinet, a load switch cabinet, and a circuit breaker cabinet.
- The secondary room of the ring main unit cannot be opened when the power is on.

Copyright © Huawei Technologies Co., Ltd.

Figure 2-18 8DJH36 (DCV)

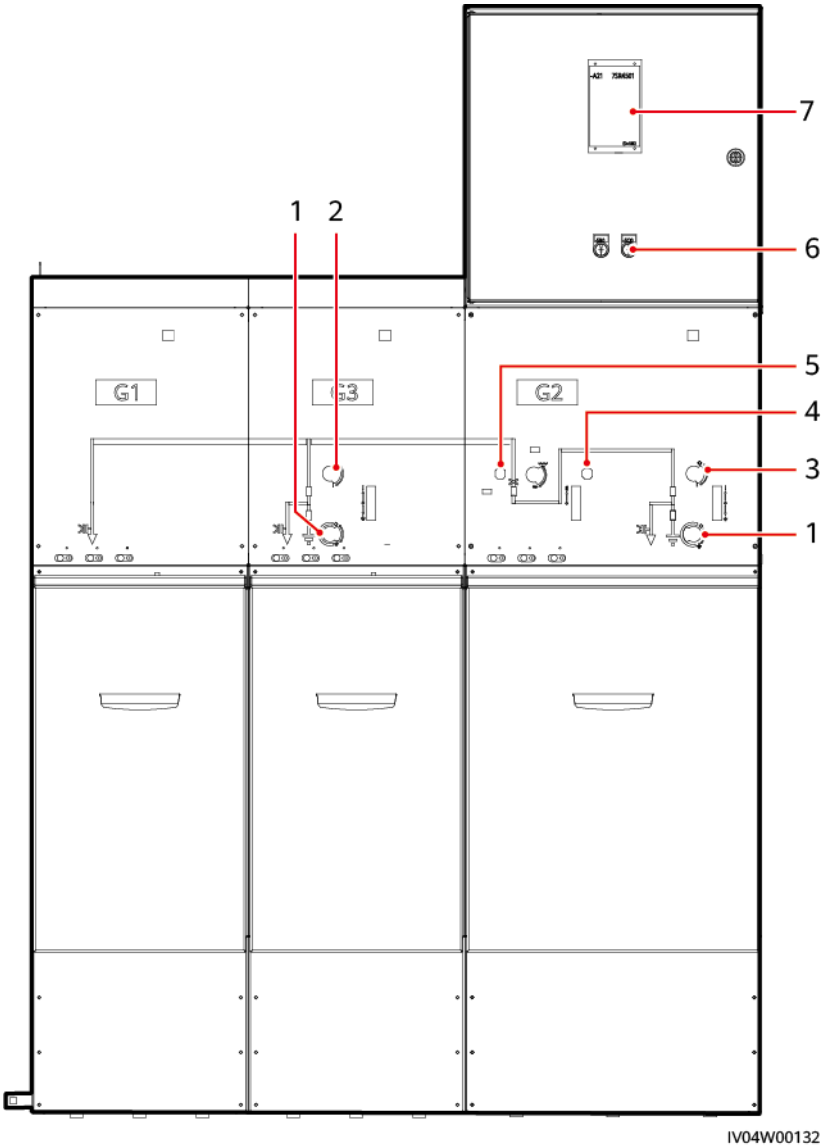

(1) Manual grounding	(2) Manual load disconnection	(3) Disconnector
(4) Manually switch off the circuit breaker	(5) Manually switch on the circuit breaker	(6) Circuit breaker electrical control switch
(7) Relay	-	-

2.4.4.11 8DJH38 (DCV)

NOTE

- The DCV ring main unit includes a direct cable entry cabinet, a load switch cabinet, and a circuit breaker cabinet.
- The secondary room of the ring main unit cannot be opened when the power is on.

Copyright © Huawei Technologies Co., Ltd.

Figure 2-19 8DJH38 (DCV)

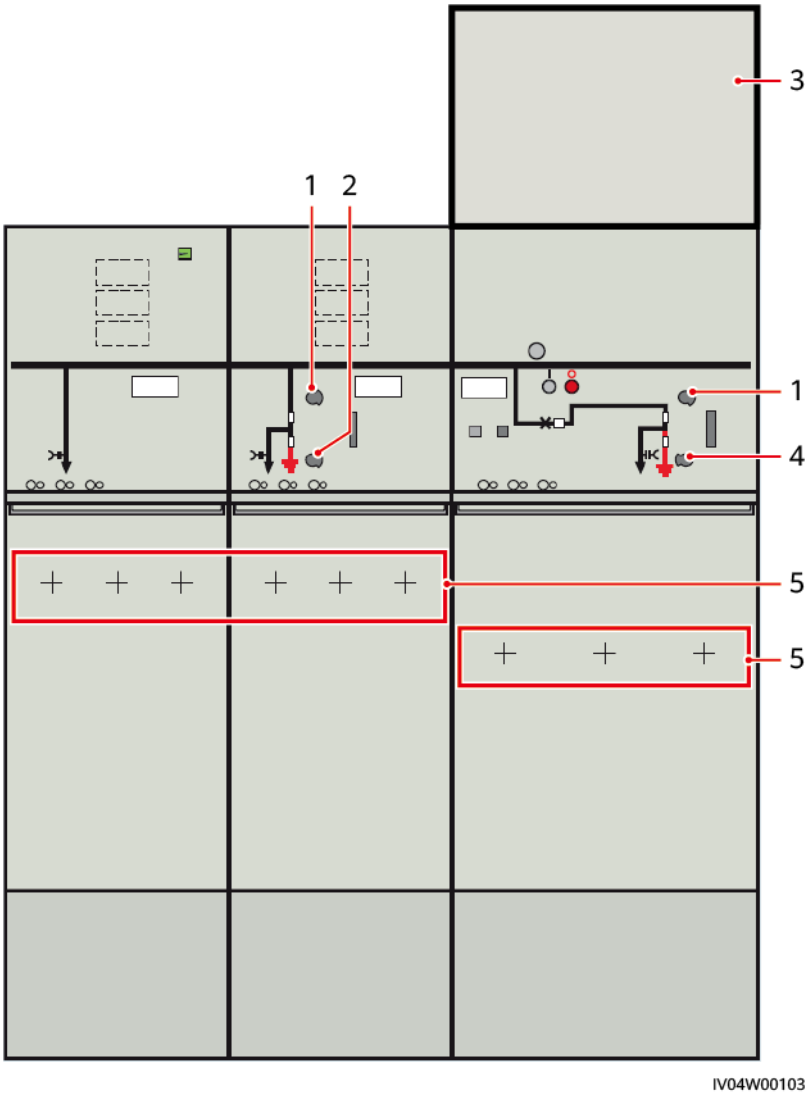

(1) Manual load disconnection	(2) Manual grounding
(3) Vacuum circuit breaker low-voltage compartment	(4) Disconnector
(5) Cable connectors (inside the cable room)	-

Copyright © Huawei Technologies Co., Ltd.

2.5 Configuration Scenario

Figure 2-20 Networking in a PV-only scenario (Components in the dotted box are optional.)

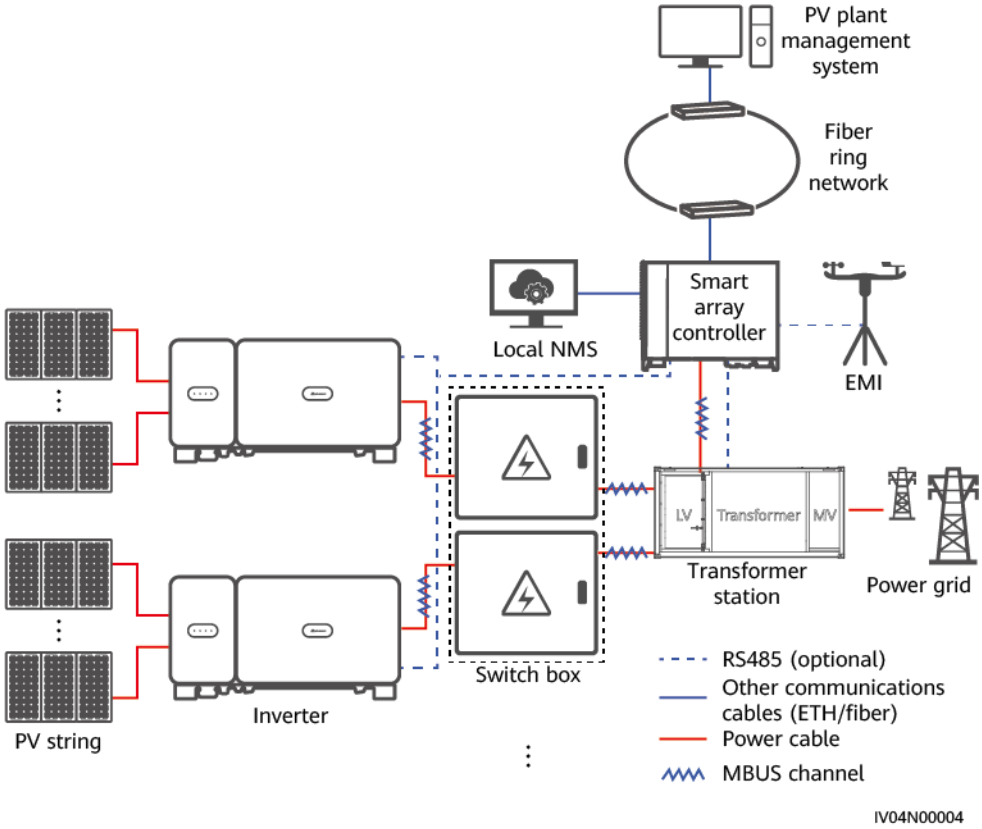

Component		Description
PV string		A PV string is a set of PV modules connected in series.
SUN2000 solar inverter	Rated capacity of the JUPITER-3000K-H1: 3300 kVA	Model: SUN2000-330KTL-H1 (≤ 11) SUN2000-330KTL-H2 (≤ 11)
	Rated capacity of the JUPITER-6000K-H1: 6600 kVA	Model: SUN2000-330KTL-H1 (≤ 22) SUN2000-330KTL-H2 (≤ 22)
	Rated capacity of the JUPITER-9000K-H1: 9000 kVA	Model: SUN2000-330KTL-H1 (≤ 30) SUN2000-330KTL-H2 (≤ 30)
Switch box (optional)		Model: ACBox-1/1-D-S

Copyright © Huawei Technologies Co., Ltd.

Component	Description
STS	Model: JUPITER-3000K-H1, JUPITER-6000K-H1, JUPITER-9000K-H1
SACU	Model: SmartACU2000D-D-03
PV plant management system	Model: iMaster NetEco NetEco software version: iMaster NetEco V600R022C00SPC120 or later

Copyright © Huawei Technologies Co., Ltd.

3 Electrical Connections

NOTICE

- Cables should have sufficient current-carrying capacity and should not be overloaded.
- Cables with the same functions should have the same specifications and type.

Figure 3-1 Cable connections (configure the components in the dotted box as required)

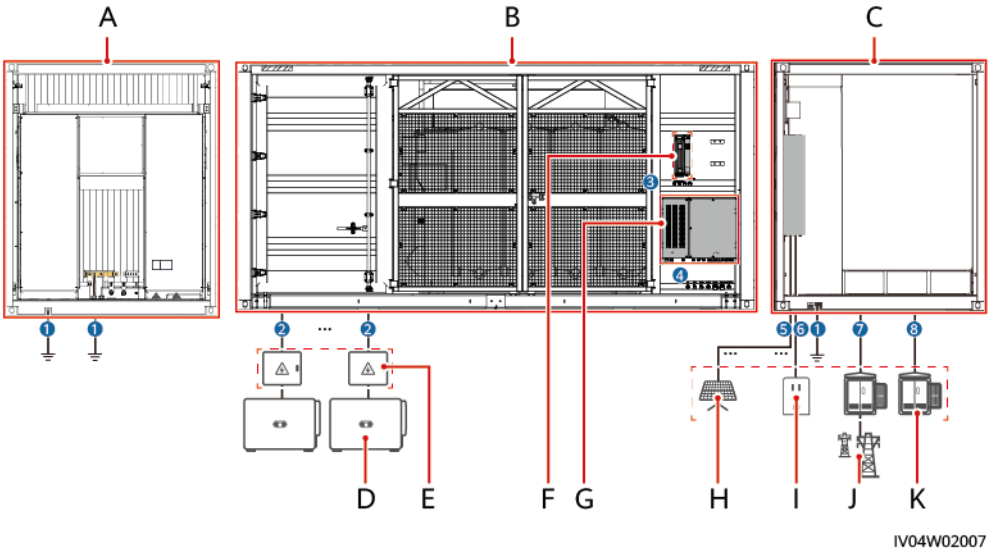

(A) Side view of the STS LV cabinet	(B) Front view of the STS	(C) Side view of the STS MV room
(D) Solar inverter	(E) AC switch box	(F) UPS
(G) Smart array controller (SACU)	(H) Support tracking system	(I) Power-consuming device
(J) Power grid	(K) STS	

Copyright © Huawei Technologies Co., Ltd.

Table 3-1 Cables

No.	Cable	Type	Cross-sectional Area	Outer Diameter	Source
1	PE cable	Single-core outdoor copper cable and M12 OT/DT terminals	50–240 mm^2	10–32 mm	Prepared by the customer
2	AC input power cable[a]	Single-core or three-core outdoor copper/copper-clad aluminum/aluminum alloy cable and M12 OT/DT terminals	50–240 mm^2	16–72 mm	Prepared by the customer
3	UPS cable bundle	N/A	N/A	N/A	Delivered with the product
4	SACU cable bundle	N/A	N/A	N/A	Delivered with the product
5	(Optional) Tracking system power cable	Three-core or four-core outdoor copper cable	2.5–16 mm^2	10–32 mm	Prepared by the customer
6	(Optional) Site auxiliary power supply cable	Two-core or three-core outdoor copper cable	2.5–10 mm^2	6–20 mm	Prepared by the customer
7	Cabinet G1 cable	Single-core or three-core outdoor copper/copper-clad aluminum/aluminum alloy cable and separable shielded cable connectors	70–300 mm^2	Single-core: 30–52 mm Three-core: 30–95 mm	Prepared by the customer
8	Cabinet G3 cable				Prepared by the customer

Note a: The AC input power cable can connect to a 300 mm^2 or 400 mm^2 single-core cable. The restrictions are as follows:

- Outer diameter of a single-core cable ≤ 35 mm
- Dimensions of the wiring terminal: width ≤ 43 mm; length ≤ 136.5 mm; outer diameter of the crimping tube ≤ 37 mm

Copyright © Huawei Technologies Co., Ltd.

4 Disposing of the STS

If the STS has reached its service life, dispose of it according to the local disposal act for waste electrical appliances.

Copyright © Huawei Technologies Co., Ltd.

5 Technical Specifications

NOTE

Some parameters involve two types of cabinets. For details, see the nameplates of the cabinets.

Input

Technical Specifications	JUPITER-3000K-H1	JUPITER-6000K-H1	JUPITER-9000K-H1
Capacity rate	3300 kVA	6600 kVA	9000 kVA
Rated input voltage	800 V		
Rated frequency	• 10 kV/11 kV/13.2 kV/15 kV/20 kV/22 kV/23 kV/30 kV/33 kV/35 kV: 50 Hz • 13.8 kV/33 kV/34.5 kV: 60 Hz		
Maximum input current at rated voltage	2619.7 A	2 x 2619.7 A	2 x 3572.4 A

Transformer

Technical Specifications	JUPITER-3000K-H1	JUPITER-6000K-H1	JUPITER-9000K-H1
Rated output voltage	10 kV/11 kV/13.2 kV/13.8 kV/15 kV/20 kV/22 kV/23 kV/30 kV/33 kV/34.5 kV /35 kV		
Tapping range	±2 x 2.5%		

Copyright © Huawei Technologies Co., Ltd.

Technical Specifications	JUPITER-3000K-H1	JUPITER-6000K-H1	JUPITER-9000K-H1
impedance characteristics	7.0% (0 to +15%)	• Crossing impedance: 8.0% (0 to +15%) • Semi-crossing impedance: 14.0% (0 to +15%) • Splitting impedance: 23% (±15%)	• Crossing impedance: 11.5% (±15%) • Semi-crossing impedance: 19% (0 to +15%) • Splitting impedance: 32% (±15%)

Protection

Technical Specifications	JUPITER -3000K-H1	JUPITER -6000K-H1	JUPITER-9000K-H1
IP ratings of the MV and LV rooms	IP54		
Surge protection	Type I+II		

General Specifications

Technical Specifications	JUPITER -3000K-H1	JUPITER -6000K-H1	JUPITER-9000K-H1
Dimensions (H x W x D)	6058 mm x 2896 mm x 2438 mm		
Weight	< 15 tons	< 22 tons	< 27 tons
Operating temperature	–25°C to +55°C		
Relative humidity	0% RH to 95% RH		
Rated operating altitude	1000 m		

Copyright © Huawei Technologies Co., Ltd.

Feature Specifications

Technical Specifications	JUPITER -3000K-H1	JUPITER -6000K-H1	JUPITER-9000K-H1
Transformer type	Oil-immersed		
Transformer cooling type	ONAN		
Transformer oil type	Mineral oil		
Transformer winding connection	Dy11	Dy11-y11	
MV switchgear	SF_6, 12–40.5 kV, 600/630 A, three feeders (CVC/CCV or DVC/DCV), 20 kA/3s, 50BF (Optional), 50G/51G (Optional)		
LV Room	ACB (2900 A/800 V/3P) and MCCB (400 A/800 V/3P, 17 PCS)	ACB (2900 A/800 V/3P), MCCB (400 A/800 V/3P, 2 x 11 PCS)	ACB (4000 A/800 V/3P), MCCB (400 A/800 V/3P, 2 x 15 PCS)
Auxiliary transformer	Part Specifications ● 5 kVA，Ii0，800 V/230 V ● 50 kVA, Dyn11, 800 V/400 V ● 50 kVA, Dyn11, 800 V/220 V Supported device specifications ● 5 kVA，Dyn11，800 V/230 V：2 kW ● 50 kVA, Dyn11, 800 V/400 V: L1 ≤ 15 kW, L2 ≤ 15 kW, L3 ≤ 15 kW ● 50 kVA, Dyn11, 800 V/220 V: L1 ≤ 15 kW, L2 ≤ 15 kW, L3 ≤ 15 kW		

Copyright © Huawei Technologies Co., Ltd.

Other ManualsLib Projects

www.manualslib.com

www.manualslib.de

www.manualslib.es

www.manualslib.fr

www.manualslib.nl

www.manualslib.mx

www.manualslib.tech 30+ Languages