User Manual

JBL-ON-33~60K-3P

V1.0

CONTENTS

1 NOTES ON THIS MANUAL ..... - 3 -

1.1 VALIDITY ..... - 3 -

1.2 SYMBOLS IN THIS DOCUMENT ..... - 3 -

1.3 STORAGE ..... - 5 -

2 OVERVIEW ..... - 5 -

2.1 PRODUCT INTRODUCTION ..... - 5 -

2.2 APPEARANCE ..... - 6 -

3 INSTALLATION ..... - 7 -

3.1 CHECK FOR PHYSICAL DAMAGE ..... - 7 -

3.2 PACKING LIST ..... - 7 -

3.3 MOUNTING ..... - 8 -

3.4 SPACE REQUIREMENT ..... - 10 -

3.5 MOUNTING STEPS ..... - 10 -

4 ELECTRICAL CONNECTION ..... - 12 -

4.1 GRID CONNECTION ..... - 12 -

4.2 PV CONNECTION ..... - 13 -

4.3 485 CONNECTION（OPTIONAL） ..... - 14 -

4.4 TURN-OFF THE INVERTER ..... - 15 -

5 POWERING ON THE SYSTEM ..... - 15 -

5.1 SUGGESTED START-UP THE INVERTER ..... - 15 -

5.2 FIRST RUN TIME SETTING ..... - 16 -

5.3 NOTES ON PV SIMULATION SOURCES ..... - 16 -

6 LCD OPERATION ..... - 17 -

7 MAINTENANCE AND CLEANING ..... - 18 -

7.1 MAINTAIN PERIODICALLY ..... - 18 -

7.2 TROUBLE SHOOTING ..... - 18 -

8 DECOMMISSIONING ..... - 20 -

8.1 REMOVE THE INVERTER ..... - 20 -

8.2 PACKAGING ..... - 20 -

8.3 STORAGE AND TRANSPORTATION ..... - 20 -

9 TECHNICAL DATA ..... - 20 -

10 MANUFACTURER WARRANTY ..... - 22 -

11 CONTACT ..... - 22 -

1 Notes on this manual

1.1 Validity

This manual describes the assembly, installation, commissioning and maintenance of the following inverter model:

JBL-ON-33K-3P, JBL-ON-36K-3P,
JBL-ON-40K-3P, JBL-ON-45K-3P,
JBL-ON-50K-3P, JBL-ON-60K-3P;

Target Group

This manual is for qualified personnel. Qualified personnel have received training and have demonstrated skills and knowledge in the construction and operation of this device. Qualified personnel are trained to deal with the dangers and hazards involved in installing electric devices.

Additional information

Find further information on special topics in the download area at our website.The manual and other documents must be stored in a convenient place and be available at all times. We assume no liability for any damage caused by failure to observe these instructions. For possible changes in this manual, accepts no responsibilities to inform the users.

1.2 Symbols in this document

Please pay close attention to all the symbols for the purpose of avoiding possible personal injury or equipment break down.

Symbol	Description
DANGER	DANGER indicates a hazardous situation which, if not avoided, will result in death or serious injury.
WARNING	WARNING indicates a hazardous situation which, if not avoided, could result in death or serious injury.
CAUTION	CAUTION indicates a hazardous situation which, if not avoided, could result in minor or moderate injury.

NOTICE	NOTICE is used to address practices not related to personal injury.
Information	Information that you must read and know to ensure optimal operation of the system.

Markings on this product

Symbol	Explanation
	Caution, risk of electric shock.
	Caution, hot surface.
5min	Operation after 5 minutes.
	Read the manual.
	Point of connection for grounding protection.
CE	CE mark. The inverter complies with the requirements of the applicable CE guidelines.
	The inverter must not be disposed of with the household waste.
Warning: High Temperature!高温危险！ Never touch the enclosure of an operating inverter. 逆变器工作时严禁触摸外壳。	Burn warning. Do not touch an operating inverter because it generates high temperatures on the shell.

1.3 Storage

The following requirements should be met if the inverter is not put into use directly.

◆ Do not unpack the inverter.

◆ Keep the storage temperature at -25°C to +60°C and the humidity at 5%-95% RH. (non-condensing)

◆ The inverter should be stored in a clean and dry place and be protected from dust and water vapor corrosion.

◆ The number of stacking layers of multiple inverters shall not exceed the limit of stacking layers marked on the outer box.

◆ Periodic inspections are required during the storage. Replace the packing materials if necessary.

◆ If the inverter has been stored for half a year or more, inspections and tests should be conducted by qualified personnel before it is put into use.

2 Overview

2.1 Product Introduction

Function

The inverters is a three-phase grid-tied PV string inverter that converts the DC power generated by PV strings into AC power and feeds the power into the power grid.

Models

This document involves the following product models:
JBL-ON-33K-3P, JBL-ON-36K-3P,
JBL-ON-40K-3P, JBL-ON-45K-3P,
JBL-ON-50K-3P, JBL-ON-60K-3P;

2.2 Appearance

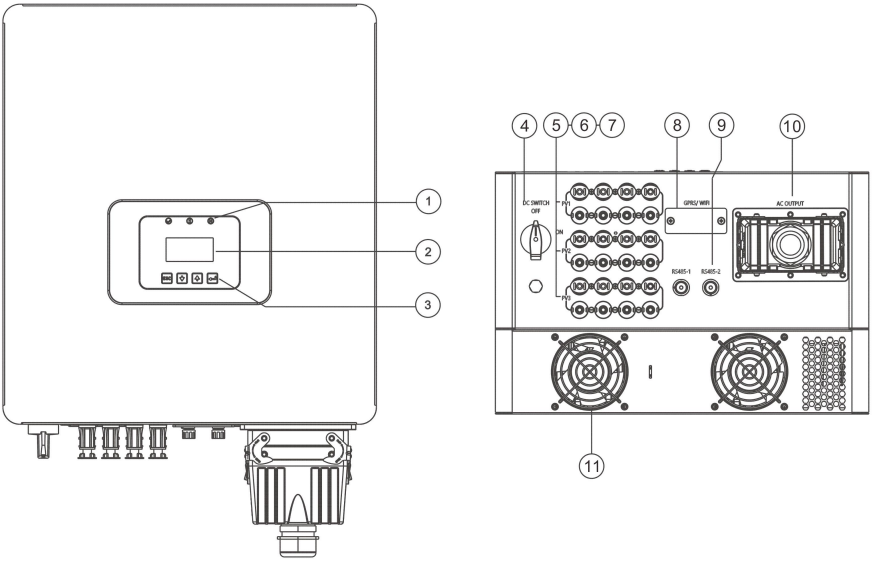

① LED indicator ② LCD display ③ Function button ④ DC switch

⑤ DC input terminals (PV1) ⑥ DC input terminals (PV2) ⑦ DC input terminals (PV3)

⑧ GPRS/WIFI output port ⑨ Communication port (RS485) ⑩ AC output port ⑪Cooling fan

LED indicator description

Category	Status	Meaning
LED 1	Blinking green at short intervals	Waiting status
	Blinking green at long intervals	Self-check
	Steady green	Normal status
LED 2	Steady yellow	Alarm
	Off	No alarm
LED 3	Blinking red at short intervals	Fault
	Off	Faultless

Function button description

Category	Description
ESC	ESC button: Return from current interface or function.
⇩	Down button: Move cursor to downside or decrease value.
⇧	Up button: Move cursor to upside or increase value.
↵	OK button: Confirm the selection.

3 Installation

3.1 Check For Physical Damage

Make sure the inverter is intact during transportation. If there is any visible damage, such as cracks, please contact your dealer immediately.

3.2 Packing List

Open the package and take out the product, please check the accessories first.

The packing list shown as below.

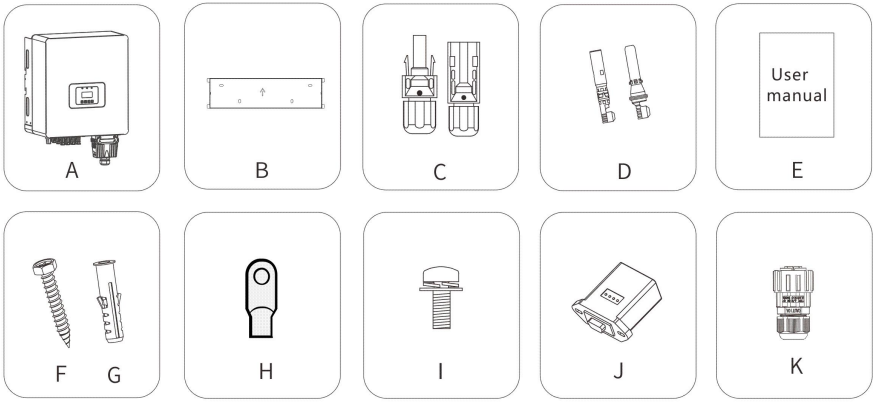

Object	Description	Quantity
A	Inverter	1
B	Bracket	1
*C	PV connectors (12*positive, 12*negative)	12/12
*D	PV pin connectors (12*positive, 12*negative)	12/12
E	User manual	1
F	Expansion tubes	4
G	Expansion screws	4
H	Ring terminal	6
I	Set screw (for mounting, external enclosure grounding)	2
J	WiFi module (optional)	1
K	RS485 connector (optional)	2

*C : 33~36K PV connectors (6*positive, 6*negative);

40K PV connectors (8*positive, 8*negative);

45~50K PV connectors (9*positive, 9*negative);

60K PV connectors (12*positive, 12*negative);

*D : 33~36K PV pin connectors (6*positive, 6*negative);

40K PV pin connectors (8*positive, 8*negative);

45~50K PV pin connectors (9*positive, 9*negative);

60K PV pin connectors (12*positive, 12*negative);

3.3 Mounting

CAUTION	◆ Please wear gloves or other protective equipment throughout the installation process to avoid accidental scratches.

Installation Precaution

JBL-ON-33~60K-3P series inverter is designed for outdoor installation. (IP 65)

Make sure the installation site meets the following conditions:

◆ Not in direct sunlight.

◆ Not in areas where highly flammable materials are stored.

◆ Not in potential explosive areas.

◆ Not in the cool air directly.

◆ Not in environment of precipitation or humidity. (>95%)

◆ Under good ventilation condition.

◆ The ambient temperature should be kept below 45℃ to ensure optimal operation.

◆ The wall hanging the inverter should meet conditions below:

1.Solid brick/concrete, or strength equivalent mounting surface;

2.Inverter must be supported or strengthened if the wall's strength isn't enough. (such as wooden wall, the wall covered by thick layer of decoration)

Please avoid direct sunlight, rain exposure, snow laying up during.

◆ The slope of the wall should be within 15°.

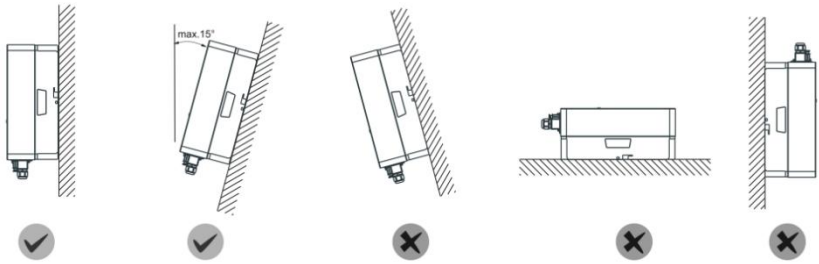

3.4 Space Requirement

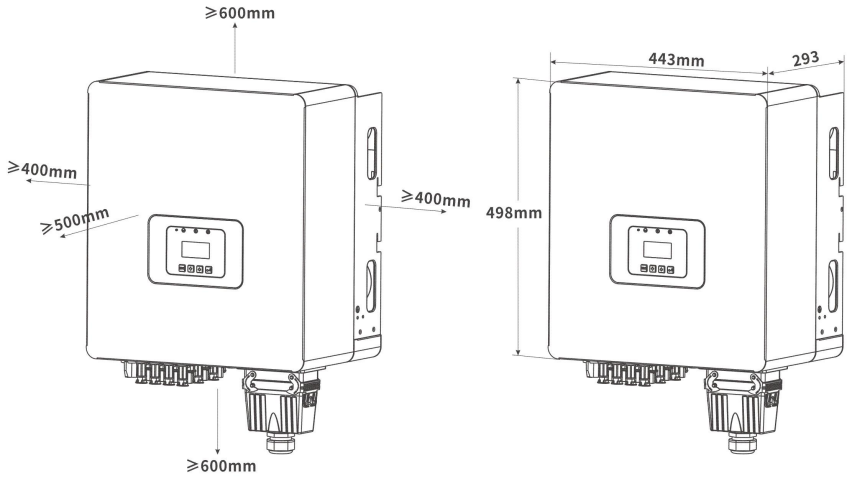

3.5 Mounting Steps

1.Use the wall bracket as a template to mark the position of the 4 holes on the wall.

2.Drill holes with driller, make sure the holes are deep enough (at least 60mm) for installation, and then tighten the expansion tubes.

3.Install the expansion tubes in the holes, and tighten them. Then install the wall bracket by using the expansion screws. (Φ10 driller, torque: 2.5±0.2N·m)

4.Hang the inverter over the bracket, move the inverter close to it, slightly lay down the inverter, and make sure the 2 mounting bars on the back are fixed well with the 4 grooves on the bracket.

5.After confirming the inverter is fixed reliably, fasten two M5 safety-lock sockets head cap screws on the right or left side firmly to prevent the inverter from being lifted off the bracket. (Torque: 2.0±0.2N·m)

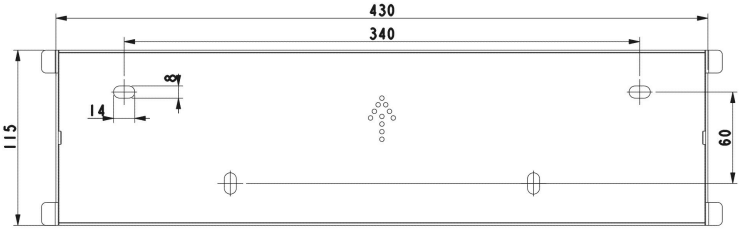

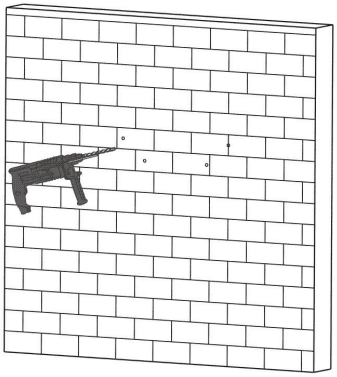

①

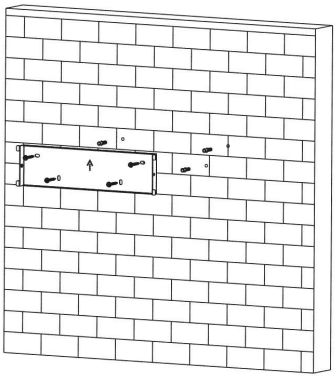

②

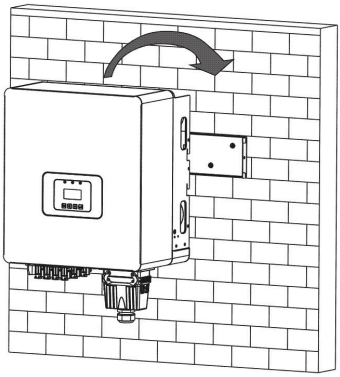

③

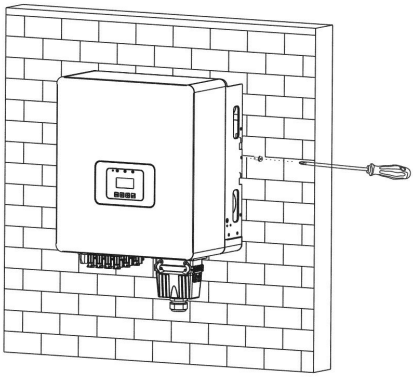

④

4 Electrical Connection

4.1 Grid Connection

JBL-ON-33~60K-3P series inverter are designed for three-phase grid. Voltage is 400V, frequency is 50/60Hz. Other technical requests should comply with the requirement of the local public grid. Micro-breaker should be installed between inverter and grid, any load should not be connected with inverter directly.

Table 3 Cable recommended

Model	Copper cable	Conductor cross section
33~40K	Five-core cable (L/N/PE)	16mm²
45~60K		35mm²

Connection Steps:

1.Choose the appropriate wire. (Cable size: refer to table3)

2.Remove 30mm of insulation from the end of wire.

3.Insert stripped wires into AC terminal and ensure that all conductor strands are captured in the AC terminal.

4.Compress the terminal head by using a crimping pliers.

5.Insert AC cable into port through screw cap and then tighten the screw cap.

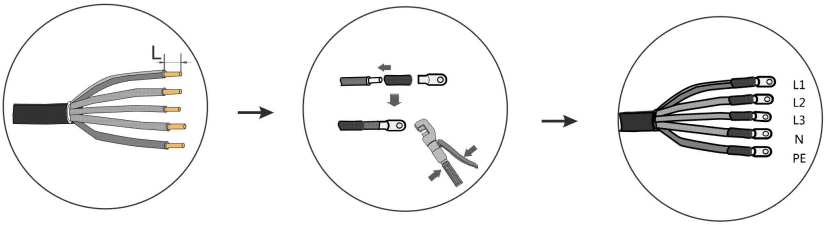

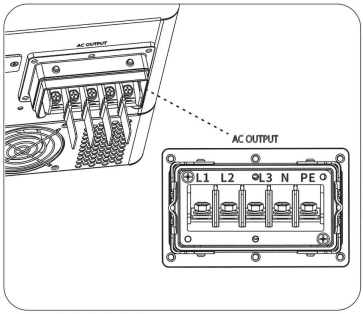

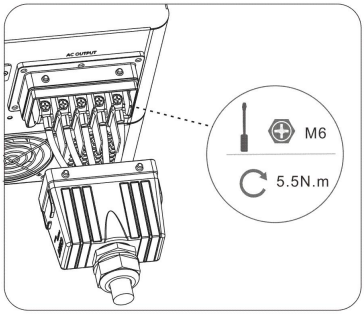

4.2 PV Connection

◆ Conditions for DC Connection

The inverter has 3 independent input: PV1 & PV2 & PV3 notice that the connectors are in paired (male and female connectors). The connectors for PV arrays and inverters are H4 connectors;

<table>
<tr><td>DANGER</td><td colspan="4">The solar modules connected to the inverter must conform to the class A requirements of the IEC 61730 standard.</td></tr>
<tr><td rowspan="3">CAUTION</td><td colspan="4">If the inverter is not equipped with a DC switch but this is mandatory in the country of installation, install an external DC switch. The following limit values at the DC input of the inverter must not be exceeded:</td></tr>
<tr><td>Model</td><td>Max current PV1</td><td>Max current PV2</td><td>Max current PV3</td></tr>
<tr><td>33K~36K
40K
45K~50K
60K</td><td>45A
52A
45A
52A</td><td>45A
52A
45A
52A</td><td>/
/
45A
52A</td></tr>
</table>

◆ Connecting the PV array

DANGER	Danger to life due to lethal voltages! ◆ PV array supplies DC voltage to inverter when exposed to light, before connecting the PV array, cover some light screens above PV arrays, ensure that the DC switch and AC breaker are disconnect from the inverter. NEVER connect or disconnect the DC connectors under load. ◆ Make sure the maximum open circuit voltage (Voc) of each PV string is less than the maximum input voltage of the inverter. ◆ Check the design of the PV plant. The max. open circuit voltage, which can occur at solar panels temperature of -10℃, must not exceed the max. input voltage of the inverter.
CAUTION	◆ Improper operation during the wiring process can cause fatal injury to operator or unrecoverable damage to the inverter. Only qualified personnel can perform the wiring work. ◆ Please don't connect PV array positive or negative pole to the ground, it could cause serious damages to the inverter. ◆ Check the connection cables of the PV modules for correct polarity and make sure that the maximum input voltage of the inverter is not exceeded.

Connection Steps:

1. Choose the 12AWG wire to connect with the cold-pressed terminal.
2. Remove 7mm of insulation from the end of wire.
3. Insert the insulation into pin contact and use crimping plier to clamp it.
4. Insert pin contact through the cable nut to assemble into back of the male or female plug. When you feel or heard a "click" sound the pin contact assembly is seated correctly.
5. Plug the PV connector into the corresponding PV connector on inverter.

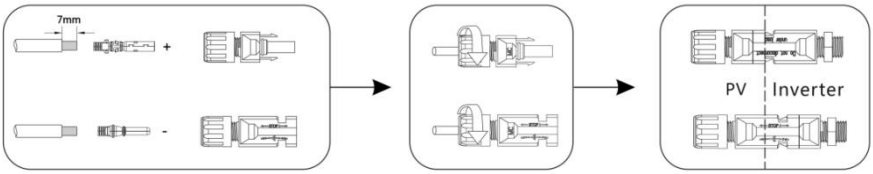

4.3 485 Connection（Optional）

◆ 485 is provided the function of remote control that allows external control device to make the inverters remote cluster control through 485 port on the inverter.

NOTICE	◆ When routing the signal cable, ensure that it is separate from the power cable and away from interfering sources to prevent communication from being affected. ◆ The protection layer of the cable is in the connector. Cut off surplus core wires from the protection layer. Ensure that the core wires are completely inserted into the cable holes, and that the cable is securely connected.

Connection Steps:

1.Uninstall the parts of the connection plug from the accessory bag.

2.Prepare communication cable, trip the insulation from the communication cable.

3.Let the communication cable pass though the waterproof connector, then insert it into the connector following the PIN definition rule.

4.Plug communication connector into the corresponding connector on inverter, the completed appearance is like the below figure.

NO.	
1	RS485+
2	RS485+
3	RS485-
4	RS485-

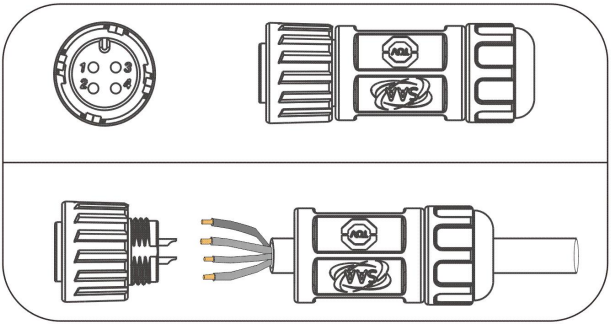

4.4 Turn-off the Inverter

CAUTION	Do not disconnect the DC connectors under load.

Turn-off the inverter step:

1.Disconnect the line circuit breaker from three-phase grid and prevent it from being reactivated.

2.Turn off the DC switch.

3.Check the inverter operating status.

4.Waiting until LED, OLED have gone out, the inverter is shut down.

5 Powering On the System

CAUTION	Before turn on the AC switch between the inverter and the power grid, use a multimeter set to the AC position to check that the AC voltage is within the specified range.

5.1 Suggested Start-up the inverter

1.Turn on the DC switch at the bottom of the inverter.

2.If there is a DC switch between the PV string and the inverter, turn on the DC switch.

3.Turn on the AC switch between the inverter and the power grid.

4.Observe the LEDs to check the operating status of the inverter.

5.2 First run time setting

When the inverter is used for the first time, please set the time first. The set time is the same as the current time, and confirm to save.

5.3 Notes on PV simulation sources

When using PV simulation source testing, you need to start the inverter according to the following steps, otherwise the inverter may be damaged. The inverter manufacturer does not assume after-sales responsibility for machine damage caused by incorrect operation.

1.Turn on the DC switch at the bottom of the inverter.

2.Set the output parameters of the PV simulation source according to the inverter DC input limit. (the inverter input voltage must be less than the maximum PV input voltage on the inverter nameplate; the inverter input current must be less than the maximum PV input current on the inverter nameplate)

3.Start PV simulation source.

4.Keep the DC switch to “ON” during the test.

6 LCD Operation

The main interface is the default interface, the inverter will automatically turn to this interface when the system started up successfully or no manual operation for a period of time.

Menu interface

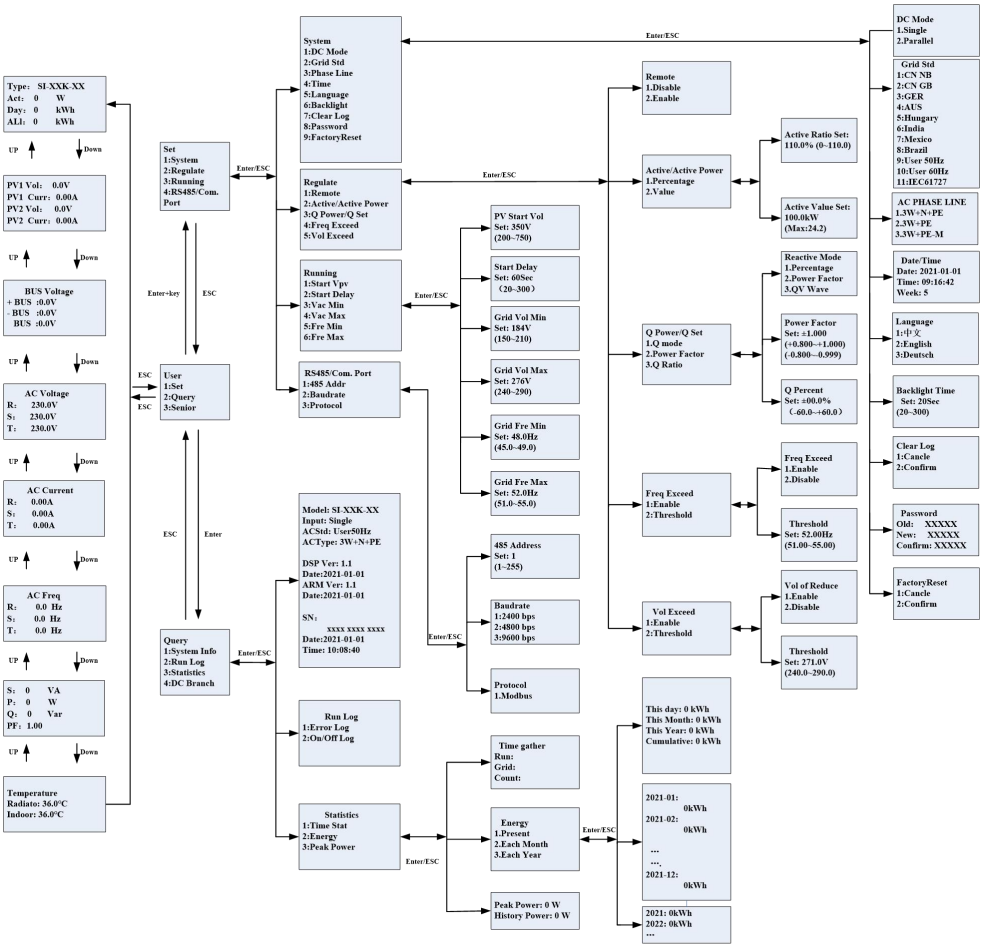

7 Maintenance and Cleaning

7.1 Maintain Periodically

1.Checking Heat Dissipation

If the inverter regularly reduces its output power due to high temperature, please improve the heat dissipation condition. Maybe you need to clean the heat sink.

2.Cleaning the Inverter

If the inverter is dirty, turn-off the AC breaker and DC switch, waiting the inverter shut down, then clean the enclosure lid, the display, and the LEDs using only a wet cloth. Do not use any cleaning agents. (e.g. solvents or abrasives)

3.Checking the DC switch

Check for externally visible damage and discoloration of the DC switch and the cables at regular intervals. If there is any visible damage to the DC switch, or visible discoloration or damage to the cables, contact the installer.

7.2 Trouble shooting

Our quality control program assures that every inverter is manufactured to accurate specifications and is thoroughly tested before leaving our factory. If you have difficulty in the operation of your inverter, please read through the following information to correct the problem.

<table>
<tr><th>Alarm ID</th><th>Alarm Name</th><th>Suggestion</th><th>Alarm ID</th><th>Alarm Name</th><th>Suggestion</th></tr>
<tr><td>E00</td><td>AC Voltage Low</td><td rowspan="4">Check the AC voltage range</td><td>E16</td><td>Remote Off</td><td>Check background instructions</td></tr>
<tr><td>E01</td><td>AC Voltage High</td><td>E18</td><td>SPI Error</td><td rowspan="6">Contact the manufacturer</td></tr>
<tr><td>E02</td><td>AC Freq Low</td><td>E20</td><td>GFCI High</td></tr>
<tr><td>E03</td><td>AC Freq High</td><td>E21</td><td>GFCI Chk Error</td></tr>
<tr><td>E04</td><td>Bus Volt Low</td><td rowspan="2">Please switch off DC switch.
Restart the inverter</td><td>E22</td><td>Vol Not Same</td></tr>
<tr><td>E05</td><td>Bus Volt High</td><td>E23</td><td>Curr Not Same</td></tr>
</table>

E06	Bus Imbalance		E26	Soft Start Err	
E07	ISO Low	Check PV impedance to ground	E27	PV Voltage High	Check the PV panel configuration
E08	DC Curr High	Check the PV panel configuration	E32	DSP Comm Error	Please switch off DC switch. Restart the inverter
E09	Hw Invert High	Contact the manufacturer			
E10	Invert I High				
E11	Invert DCI High				
E12	Env T High				
E13	Radiator Heat				
E14	AC Relay Err				
E15	PV Voltage Low	Check the PV panel configuration			

Alarm ID	Alarm Name	Suggestion	Alarm ID	Alarm Name	Suggestion
W16	Clock Warn	Replace the internal button pool	W05	Fan 1 Speed Low	Check the external fan
W03	Active 0 Warn	Normal shutdown at low power	W06	Fan2 Speed Low	
W04	Array Warn	Check the PV panel	W07	Fan 3 Speed Low	
W21	Arrester Warn	Check the lightning arresters	W08	Fan 4 Speed Low	

8 Decommissioning

8.1 Remove the Inverter

◆ Disconnect the inverter from DC input and AC output.

◆ Wait for 5 minutes for de-energizing.

◆ Disconnect communication and optional connection wires.

◆ Remove the inverter from the bracket.

◆ Remove the bracket if necessary.

8.2 Packaging

◆ Please pack the inverter with the original packaging.

◆ If the original package is no longer available, you can also use an equivalent carton that meets the following requirements.

8.3 Storage and Transportation

◆ Store the inverter in a dry environment where ambient temperature keep always between -25°C~+60°C.

◆ When the inverter or other related components need to be disposed. Have it carried out according to local waste handling regulations. Please be sure to deliver wasted inverters and packing materials to certain site, where can assist relevant department to dispose and recycle.

9 Technical Data

Model	JBL-ON -33K-3P	JBL-ON -36K-3P	JBL-ON -40K-3P	JBL-ON -45K-3P	JBL-ON -50K-3P	JBL-ON -60K-3P
Input Data						
Max. PV input power	43kW	47kW	52kW	60kW	65kW	78kW
Max. PV input voltage	1100V					
Operation voltage range	200V-1000V					
Number of independent MPPT/strings per MPPT	2/3	2/3	2/4	3/3	3/3	3/4

MPPT max. current	45A*2	45A*2	52A*2	45A*3	45A*3	52A*3
AC Output Data						
Rated output power	33kW	36kW	40kW	45kW	50kW	60kW
Max. output power	36kW	40kW	44kW	50kW	55kW	66kW
Rated output voltage	400V±20%					
Rated output frequency	50Hz,60Hz/±5Hz					
Rated output current	48A	52A	58A	65A	72A	87A
Max. output current	52A	58A	64A	72A	80A	95A
Power factor	±0.8					
THDi	<3%					
Grid system pattern	3W+N+PE					
Efficiency						
Max. efficiency	98.5%					
Europe efficiency	98.2%					
General Data						
Dimensions (L/W/H) in mm	443/293/498					
Weight	<34kg			<38kg		
Operation temperature range	–25°C ... +60°C					
Heat dissipation mode	Smart cooling					
IP class	IP65					
Features						
LCD display	Yes					
Communication interface	WiFi/GPRS/RS485					

10 Manufacturer Warranty

Please refer to the warranty card.

11 Contact

If you have technical problems concerning our products, contact your installer or manufacturer.

During inquiring, please provide below information:

1.Inverter type

2.Modules information

3.Communication method

4.Serial number of inverters

5.Error code of inverters

6.Display of inverter LCD

V1.0, 2026-04-29