Ginlong Technologies Co., Ltd.
No. 57 Jintong Road, Binhai Industrial Park, Xiangshan, Ningbo,
Zhejiang, 315712, P.R.China.
Tel: +86 (0)574 6578 1806
Email:info@ginlong.com
Web: www.solisinverters.com

Please adhere to the actual products in case of any discrepancies in this user manual.

If you encounter any problem on the inverter, please find out the inverter S/N and contact us, we will try to respond to your question ASAP.

# Solis Three Phase Inverter

S6-GU3P(275-350)K06-EV-ND Installation and Operation Manual

Ver 1.0

Ginlong Technologies Co., Ltd.

# Contents


1. Introduction ..... 4
1.1 Product Description ..... 4
1.2 Unpacking and storage ..... 5
1.2.1 Storage ..... 6
2. Safety instructions ..... 7
2.1 Safety symbols ..... 7
2.2 General safety instructions ..... 7
2.3 Notice for use ..... 8
2.4 Notice for Disposal ..... 8
3. Installation ..... 9
3.1 Environmental considerations ..... 9
3.1.1 Select a location for the inverter ..... 9
3.1.2 Other environmental considerations ..... 10
3.2 Product handling ..... 11
3.3 Mounting the Inverter ..... 12
3.3.1 Wall mounting ..... 13
3.4 Electrical Connections ..... 14
3.4.1 Grounding ..... 15
3.4.2 Connect PV side of inverter ..... 17
3.4.3 Connect grid side of inverter ..... 19
4. Communication & Monitoring ..... 27
4.1 RS485 and PLC communication connection ..... 27
4.2 Logic interface connection ..... 29
5. Start and Shutdown ..... 30
5.1 Start-up procedure ..... 30
5.2 Shutdown procedure ..... 30
6. Normal operation ..... 31
6.1 APP Download ..... 31
6.2 Log in the APP via bluetooth ..... 31
6.3 Home Page ..... 33
6.4 Info Page ..... 34
6.5 Alarm Page ..... 34
7. Maintenance ..... 36
7.1 Anti-PID Function ..... 36
7.2 Night SVG ..... 37
7.3 Fan Maintenance ..... 38
8. Troubleshooting ..... 39
9. Specifications ..... 42

## 1.1 Product Description

Solis Three phase Inverters covert DC power from the photovoltaic(PV) array into alternating current(AC) power that can satisfy local loads as well as feed the power distribution grid.

This manual covers the three phase inverter model listed below:

**S6-GU3P275K06-EV-ND, S6-GU3P300K06-EV-ND, S6-GU3P333K06-EV-ND, S6-GU3P350K06-EV-ND**

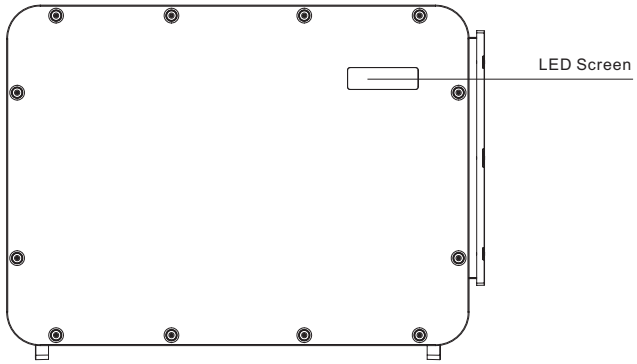


Figure 1.1 Front view

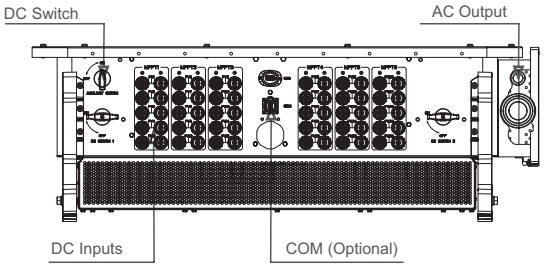


Figure 1.2 Bottom view



1. Introduction

## 1.2 Unpacking and storage

The inverter ships with all accessories in one carton.

When unpacking, please verify all the parts listed below are included:

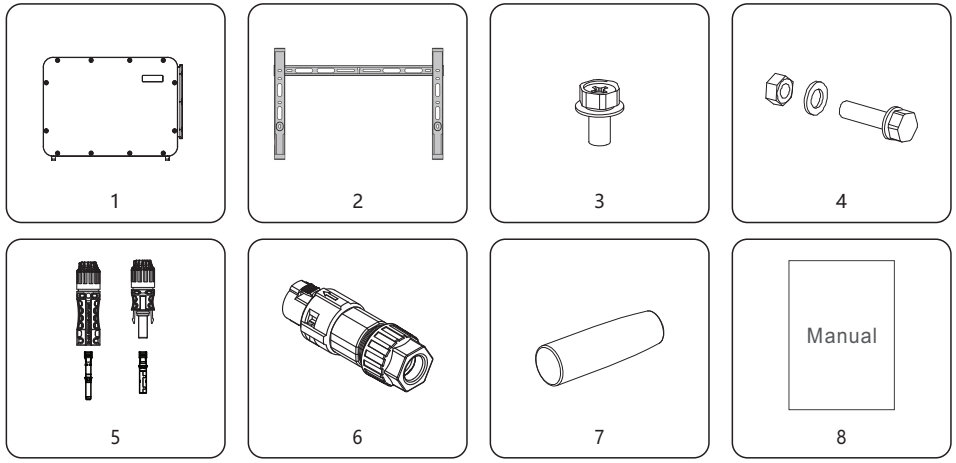


| Part # | Description | Number | Remarks |
|---|---|---|---|
| 1 | Inverter | 1 | |
| 2 | Mounting Bracket | 1 | |
| 3 | Fastening screw | 1 | Hexagon bolt M6*12 |
| 4 | Fastening screw, hex nut and flat gasket | 4 | Hexagon bolt M10*40 |
| 5 | DC connector | 24, 30 | S6-GU3P275K06-EV-ND*24 |
| 6 | 8 pin COM terminals | 1 | |
| 7 | Handle | 4 | |
| 8 | User manual | 1 | |

Inverter packing list

### 1.2.1 Storage

If the inverter is not installed immediately, storage instructions and environmental conditions are below:

- Use the original box to repackage the inverter, seal with adhesive tape with the desiccant inside the box.
- Store the inverter in a clean and dry place, free of dust and dirt. The storage temperature must be between -40 - 70℃ and humidity should be between 0 to 95%, non-condensing.
- Do not stack more than three (3) inverters high on a single pallet.
- Keep the box(es) away from corrosive materials to avoid damage to the inverter enclosure.
- Inspect the packaging regularly. If packing is damaged (wet, pest damages, etc.), repackage the inverter immediately.
- Store inverters on a flat, hard surface -- not inclined or upside down.
- After 100 days of storage, the inverter and carton must be inspected for physical damage before installing. If stored for more than 1 year, the inverter needs to be fully examined and tested by qualified service or electrical personnel before using.
- Restarting after a long period of non-use requires the equipment be inspected and, in some cases, the removal of oxidation and dust that has settled inside the equipment will be required.

**DO NOT STACK MORE THAN 3 HIGH**

Figure 1.3





Improper use may result in electric shock hazards or burns. This product manual contains important instructions that are required to be followed during installation and maintenance. Please read these instructions carefully before use and keep them in an easily locatable place for future reference.

## 2.1 Safety symbols

Safety symbols used in this manual, which highlight potential safety risks and important safety information, are listed below:

**WARNING**
Symbol indicates important safety instructions, which if not correctly followed, could result in serious injury or death.

**NOTE**
Symbol indicates important safety instructions, which if not correctly followed, could result in damage to or the destruction of the inverter.

**CAUTION, RISK OF ELECTRIC SHOCK**
Symbol indicates important safety instructions, which if not correctly followed, could result in electric shock

**CAUTION, HOT SURFACE**
Symbol indicates safety instructions, which if not correctly followed, could result in burns.

## 2.2 General safety instructions

**WARNING**
Do not connect PV array positive (+) or negative (-) to ground – doing so could cause serious damage to the inverter.

**WARNING**
Electrical installations must be done in accordance with local and national electrical safety standards.

**WARNING**
To reduce the risk of fire, branch circuit over-current protective devices (OCPD) are required for circuits connected to the Inverter.

**CAUTION**
The PV array (solar panels) supplies a DC voltage when exposed to light.

# 2. Safety Instructions

**CAUTION**
Risk of electric shock from energy stored in the inverter's capacitors. Do not remove cover until five (5) minutes after disconnecting all sources of supply have passed, and this can only be done by a service technician. The warranty may be voided if any unauthorized removal of cover occurs.

5min

**CAUTION**
Risk of electric shock from energy stored in the inverter's capacitors. Do not remove cover until 20 minutes after disconnecting all sources of supply have passed, and this can only be done by a service technician. The warranty may be voided if any unauthorized removal of cover occurs.

**CAUTION**
The inverter's surface temperature can reach up to 70℃ . To avoid risk of burns, do not touch the surface when the inverter is operating. Inverter must be installed out of the reach of children.

**WARNING**
The inverter can only accept a PV array as a DC input. Using any other type of DC source could damage the inverter.

## 2.3 Notice for use

The inverter has been constructed according to applicable safety and technical guidelines. Use the inverter in installations that meet the following requirements ONLY:

1). The inverter must be permanently installed.
2). The electrical installation must meet all the applicable regulations and standards.
3). The inverter must be installed according to the instructions stated in this manual.
4). The system design must meet inverter specifications.
5). The inverter can only be used for industrial.

To start-up the inverter, the Grid Supply Main Switch (AC) must be turned on, BEFORE the DC Switch is turned on. To stop the inverter, the Grid Supply Main Switch (AC) must be turned off before the DC Switch is turned off.

## 2.4 Notice for Disposal

This product shall not be disposed of with household waste. They should be segregated and brought to an appropriate collection point to enable recycling and avoid potential impacts on the environment and human health. Local rules in waste management shall be respected .



# 3. Installation

## 3.1 Environmental considerations

### 3.1.1 Select a location for the inverter

When selecting a location for the inverter, consider the following:

**WARNING: Risk of fire**
Despite careful construction, electrical devices can cause fires.
- Do not install the inverter in areas containing highly flammable materials or gases.
- Do not install the inverter in potentially explosive atmospheres.
- The mounting structure where the inverter is installed must be fireproof.

- The temperature of the inverter heat-sink can reach 70℃.
- The inverter is designed to work in an ambient temperature range between -30 to 60℃.
- If multiple inverters are installed on site, a minimum clearance of 600mm should be kept between each inverter and all other mounted equipment. The bottom of the inverter should be at least 600mm above of the ground or floor (see Figure 3.1).
- The LED status indicator lights and the LED located on the inverter's front panel should not be blocked.
- Adequate ventilation must be present if the inverter is to be installed in a confined space.
- When multiple inverters are installed and the space is sufficient, a zigzag installation is recommended. Font type, back-to-back installation is not recommended. Do not install it stacked up and down.

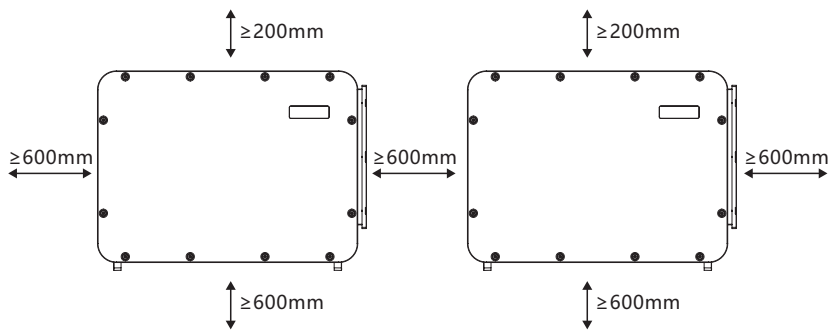


Figure 3.1 Distances required between inverters

**NOTE**
Nothing should be stored on or placed against the inverter.

When multiple inverters are installed and the space is sufficient, a zigzag installation is recommended. Font type, back-to-back installation is not recommended.
Do not install it stacked up and down.

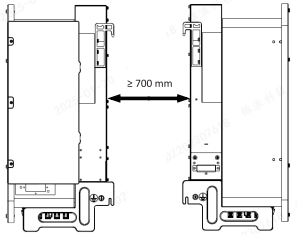


Figure 3.2 Horizontal and back-to-back installation

3.1.1.1 Examples of correct and incorrect installations

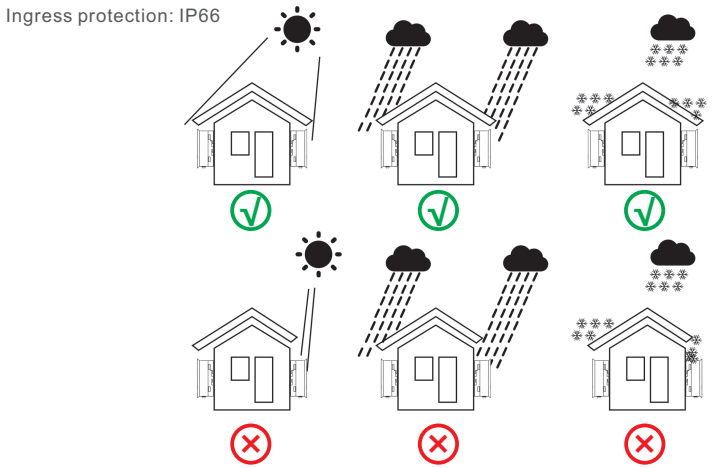


Figure 3.3 Recommended Installation locations



3. Installation

### 3.1.2 Other environmental considerations

3.1.2.1 Consult technical data

Consult the specifications section (section 10) for additional environmental conditions (protection rating, temperature, humidity, altitude, etc.).

3.1.2.2 Avoiding direct sunlight

Installation of the inverter in a location exposed to direct sunlight should to be avoided.
Direct exposure to sunlight could cause:

- Power output limitation (with a resulting decreased energy production by the system).
- Premature wear of the electrical/electromechanical components.
- Premature wear of the mechanical components (gaskets) and user interface.

3.1.2.3 Air circulation

Do not install in small, closed rooms where air cannot freely circulate. To prevent overheating, always ensure that the air flow around the inverter is not blocked.

3.1.2.4 Flammable substances

Do not install near flammable substances. Maintain a minimum distance of three (3) meters (10 feet) from such substances.

3.1.2.5 Living area

Do not install in a living area where the prolonged presence of people or animals is expected. Depending on where the inverter is installed (for example: the type of surface around the inverter, the general properties of the room, etc.) and the quality of the electricity supply, the sound level from the inverter can be quite high.

## 3.2 Product handling

Please review the instruction below for handling the inverter:

1. The red circles below denote cutouts on the product package.
   Push in the cutouts to form handles for moving the inverter around 135KG.

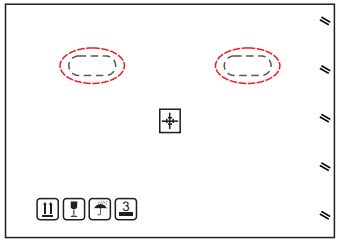

Figure 3.4 Handles used to move the inverter shown circled in red

2. Two people are required to remove the inverter from the shipping box. Use the handles integrated into the heat sink to remove the inverter from the carton (see Figure 3.5).

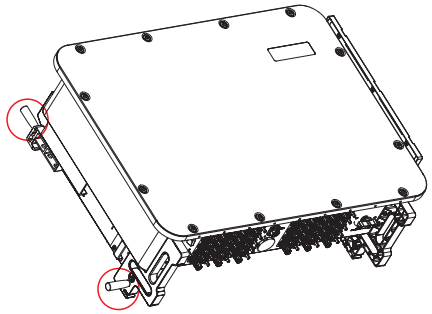

Figure 3.5 Inverter handles

**WARNING**

Due to the weight of the inverter, contusions or bone fractures could occur when incorrectly lifting and mounting the inverter. When mounting the inverter, take the weight of the inverter into consideration. Use a suitable lifting technique when mounting. When installers are carrying the inverter, please use 4 handles to secure safety. Lifting force of each handle shall not exceed 1.5 times of the inverter weight.

In case of using hoisting to lift the inverter, fix the hoisting cable to the hanger shown in the graph. Please make a reasonable selection of hoisting equipment considering the inverter weight of 117kg.

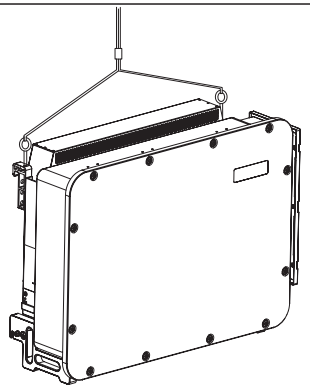

Figure 3.6 Hoisting sketch



3. Installation

## 3.3 Mounting the Inverter

• Local climatic conditions should be taken into account, and measures such as rain and snow should be taken if necessary.
• The installation angle between the inverter and the installed roof should be ≥ 15°.
• The distance between the bottommost DC terminal and the ground should be ≥ 450mm.
• The cable should be tied and fixed at a distance of 300~350mm from the DC terminal and the AC terminal to avoid the waterproof terminal caused by the cable sagging and shaking The force is loose, which affects the protection level of the product.
• Each waterproof joint should be tightened according to the torque requirements in the figure below to ensure that it is tightened and sealed well.
• Keep the cable naturally straight, and do not stress the cable.

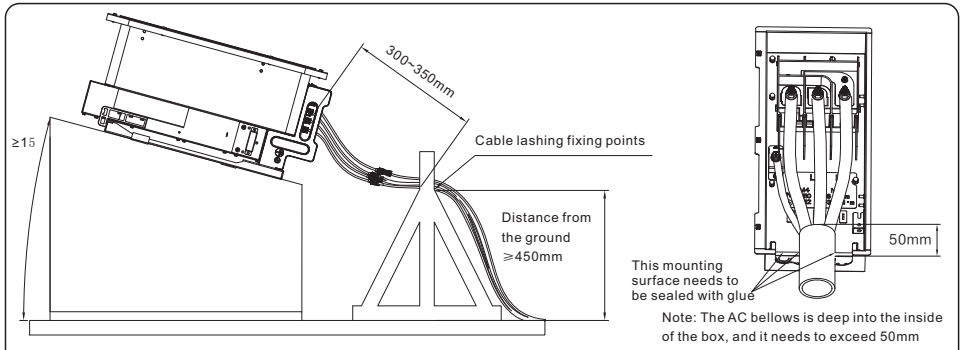


Figure 3.7 Installing the inverter

The inverter can be mounted on the wall.
See Figure 3.8 The inverter should be installed vertically.
The installation steps of the inverter are as follows:
1. Make sure the back plate is horizontal, mark well, and drill holes according to the mark.
2. According to the hole diameter of the expansion bolt, select the appropriate drill bit perpendicular to the wall to punch holes, and the depth is not less than 90mm.
3. Secure the back plate with mounting bolts.
4. Lift the inverter and hang it on the stand, then slide down to make sure they fit perfectly.

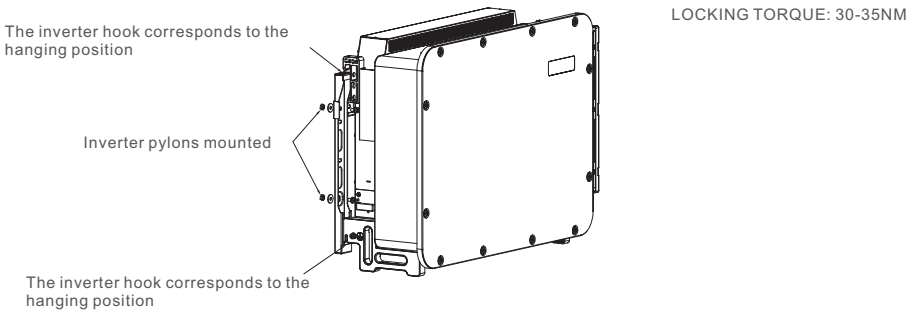


Figure 3.8 Installing the inverter

## 3.4 Electrical Connections

Inverter design uses PV style quick-connect terminal. The top cover needn't be opened during DC electrical connection. The labels located the bottom of the inverter are described below in table 3.1. All electrical connections are suitable for local or national standard.

| Parts | Connection | Cable size | Torque |
|---|---|---|---|
| DC terminal | PV strings | 4-6mm² | NA |
| Ground terminal | AC ground | 35-60mm² | 10-12N.m |
| Grid terminal | Grid | 95-400mm² | 20-30N.m |
| RS-485 terminal | Communication cable | 0.5-0.75mm² | 0.6N.m |
| COM terminal | Wi-Fi/Cellular stick | NA | NA |
| DC surge protection device | NA | NA | NA |

Table 3.1 Electrical connection symbols

The electrical connection of the inverter must follow the steps listed below:

1. Switch the Grid Supply Main Switch (AC) OFF.
2. Switch the DC Isolator OFF.
3. Connect the inverter to the grid.
4. Assemble PV connector and connect to the Inverter.



3. Installation

### 3.4.1 Grounding

To effectively protect the inverter, two grounding methods must be performed.
Connect the AC grounding cable (Please refer to section 3.4.3)
Connect the external grounding terminal.

To connect the grounding terminal on the heat sink, please follow the steps below:

1) Prepare the grounding cable: recommend to use the outdoor copper-core cable. The grounding wire should be at least half size of the hot wires.

2) Prepare OT terminals: M10.

**Important:**
For multiple inverters in parallel , all inverters should be connected to the same ground point to eliminate the possibility of a voltage potential existing between inverter grounds.

3) Strip the ground cable insulation to a suitable length.

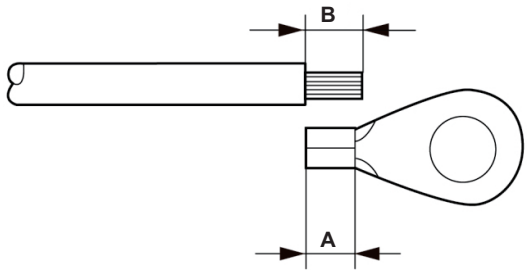


Figure 3.9 Suitable length

**Important:**
B (insulation stripping length) is 2mm~3mm longer than A (OT cable terminal crimping area) .

4) Insert the stripped wire into the OT terminal crimping area and use the hydraulic clamp to crimp the terminal to the wire.

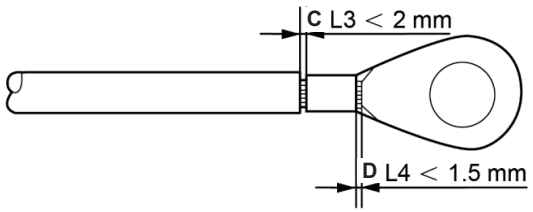


Figure 3.10 Strip wire

**Important:**
After crimping the terminal to the wire, inspect the connection to ensure the terminal is solidly crimped to the wire.

5) Remove the screw from the heat sink ground point.

6) Connect the grounding cable to the grounding point on the heat sink, and tighten the grounding screw, Torque is 10-12Nm.

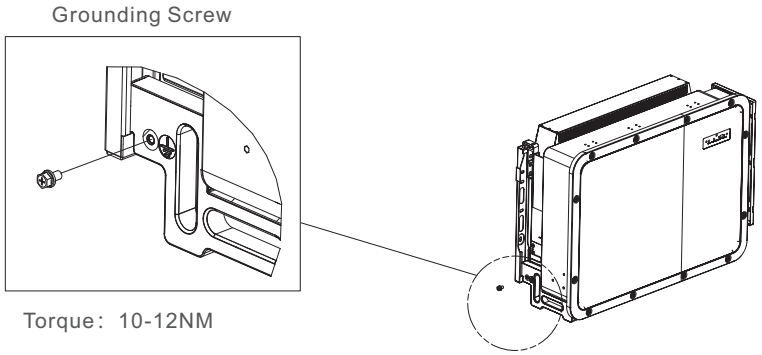


Figure 3.11 Fixed cable

**Important:**
For improving anti-corrosion performance,
after ground cable installed, apply silicone or paint.



3. Installation

## 3.4.2 Connect PV side of inverter

**WARNING**
Before connecting the inverter, make sure the PV array open circuit voltage is within the limit of the inverter. Otherwise, the inverter could be damaged.

**WARNING**
DO NOT connect the PV array positive or PV array negative cable to ground. This can cause serious damage to the inverter!

**WARNING**
MAKE SURE the polarity of the PV array output conductors matches the DC- and DC+ terminal labels before connecting these conductors to the terminals of the inverter.

**WARNING**
Please use the original DC MC4 terminals, otherwise the unqualified DC connectors may cause damages to the inverter.

**Important:**
The inverter has a DC fuseless design with internal overcurrent protection. It is not needed to install any external DC string fuses or DC circuit breakers. If customers want to have redundant protection, they can choose to install external DC overcurrent protection devices with 1.5~2.4 times of the string Impp. External DC overcurrent protection devices shall comply with IEC/EN 60269-6.

Please see table 3.1 for acceptable wire size for DC connections.Wire must be copper only.

The steps to assemble the DC connectors are listed as follows:

1. Strip off the DC wire for about 7mm, Disassemble the connector cap nut.
2. Insert the wire into the connector cap nut and contact pin.

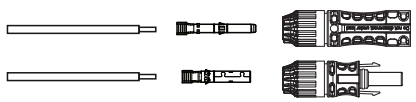

Figure 3.12 Disassemble the Connector Cap nut

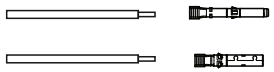

Figure 3.13 Insert the Wire into the Connector Cap nut and contact pin

3. Crimp the contact pin to the wire using a proper wire crimper.
4. Insert metal connector into top of connector, and tighten nut with torque 3-4 Nm.

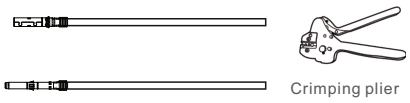


Figure 3.14 Crimp the contact pin to the wire

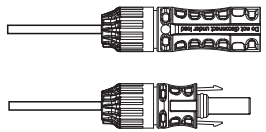

Figure 3.15 Connector with Cap nut Screwed on

5. Measure PV voltage of DC input with multimeter, verify DC input cable polarity (see figure 3.16), and ensure each string voltage is in range of inverter operation. Connect DC connector with inverter until hearing a slight clicking sound indicating successful connection. (see figure 3.17)

Figure 3.16 Multimeter measurement

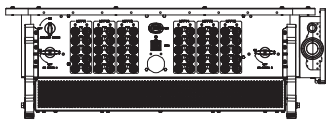

Figure 3.17 Connect the DC Connectors to the Inverter

| Cable type | Traverse area（mm²） | | Outside diameter of cable（mm） |
|---|---|---|---|
| | Range | Recommended value | |
| Industry generic PV cable (model:PV1-F) | 4.0~6.0 (12~10AWG) | 4.0 (12AWG) | 5.5~9.0 |

**Caution:**
If DC inputs are accidently reversely connected or inverter is faulty or not working properly, it is NOT allowed to turn off the DC switch. Otherwise it may cause DC arc and damage the inverter or even lead to a fire disaster.
The correct actions are:
*Use a clip-on ammeter to measure the DC string current.
*If it is above 0.5A, please wait for the solar irradiance reduces until the current decreases to below 0.5A.
*Only after the current is below 0.5A, you are allowed to turn off the DC switches and disconnect the PV strings.
* In order to completely eliminate the possibility of failure, please disconnect the PV strings after turning off the DC switch to aviod secondary failures due to continuous PV energy on the next day.
Please note that any damages due to wrong operations are not covered in the device warranty.

Requirements for the PV modules per MPPT input:

- All PV modules must be of the same type and power rating.
- Please ensure the PV strings are evenly connected to the inverter and try to utilize all the MPPT trackers.
- All PV modules must be aligned and tilted identically.
- The open-circuit voltage of the PV array must never exceed the maximum input voltage of the inverter, even at the coldest expected temperature. (see section 10 “Specifications” for input current and voltage requirements)
- Each string connected to a single MPPT must consist of the same number of series-connected PV modules.





### 3.4.2.1 DC connection high voltage danger notice

**CAUTION**
RISK OF ELECTRIC SHOCK

Do not touch an energized DC conductor. There are high voltages present when PV modules are exposed to light causing a risk of death due to an electric shock from touching a DC conductor!
Only connect the DC cables from the PV module to the inverter as described in this manual.

**CAUTION**
POTENTIAL DAMAGE TO THE INVERTER DUE TO OVERVOLTAGE

The DC input voltage of the PV modules must not exceed the maximum rating of the inverter. (see section 10 “Specifications”)
Check the polarity and the open-circuit voltage of the PV strings before connecting the DC cables to the inverter.
Confirm proper string length and voltage range before connecting DC cable to the inverter.

## 3.4.3 Connect grid side of inverter

**WARNING**
An over-current protection device must be used between the inverter and the grid.

1). Connect the three (3) AC conductors to the three (3) AC terminals marked “L1”, “L2” and “L3”.Refer to local code and voltage drop tables to determine the appropriate wire size and type.
2). Connect the grounding conductor to the terminal marked “PE” (protective earth, the ground terminal).

**Over-Current Protection Device (OCPD) for the AC side**
To protect the inverter's AC connection line, we recommend installing a device for protection against over-current and leakage, with the following characteristics noted in Table 3.2 (The OCPD shall comply with IEC/EN60947-3):

**NOTE**
Use AL-CU transfer (bi-metallic) terminal or anti-oxidant grease with aluminum cables and terminals.

| Inverter | Rated voltage(V) | Max. output current (Amps) | Current for protection device (A) |
|---|---|---|---|
| S6-GU3P275K06-EV-ND | 800 | 198.5 | 300 |
| S6-GU3P300K06-EV-ND | 800 | 216.5 | 300 |
| S6-GU3P333K06-EV-ND | 800 | 240.3 | 350 |
| S6-GU3P350K06-EV-ND | 800 | 252.6 | 350 |

Table 3.2 Rating of grid OCPD

### 3.4.3.1 Connecting the inverter to the utility grid

All electrical installations must be carried out in accordance with the local standards and the National Electrical Code® ANSI/NFPA 70 or the Canadian Electrical Code® CSA C22.1. The AC and DC electric circuits are isolated from the enclosure. If required by section 250 of the National Electrical Code®, ANSI/NFPA 70, the installer is responsible for grounding the system.

The grid voltage must be within the permissible range. The exact operating range of the inverter is specified in section 10 “Specifications”.

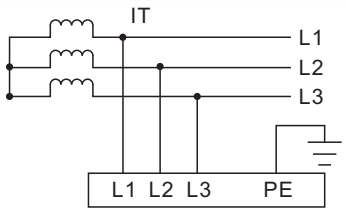


Figure 3.18 transformer type

3. Installation

### 3.4.3.2 Wiring procedure

**CAUTION**
RISK OF ELECTRIC SHOCK. Prior to starting the wiring procedure, ensure that the three-pole circuit breaker is switched off and cannot be reconnected.

**NOTE**
Damage or destruction of the inverter's electronic components due to moisture and dust intrusion will occur if the enclosure opening is enlarged.

**CAUTION**
Risk of fire if two conductors are connected to one terminal. If a connection of two conductors to a terminal is made, a fire can occur. NEVER CONNECT MORE THAN ONE CONDUCTOR PER TERMINAL.

**NOTE**
Use M12 crimp terminals to connect to the inverter AC terminals.

| Cable specification | | Live wire | Ground wire |
|---|---|---|---|
| Traverse cross sectional area ($mm^2$) | Range | 95~400 | 35~60 |
| | Recommended | 120 | 60 |
| Conduit diameter (mm) | Range | 30~75 | 30~75 |

**NOTE**
Cable ampacity of ground wire should be more than half of cable ampacity of live wire.

1) Strip the end of AC cable insulating jacket about 300mm then strip the end of each wire.

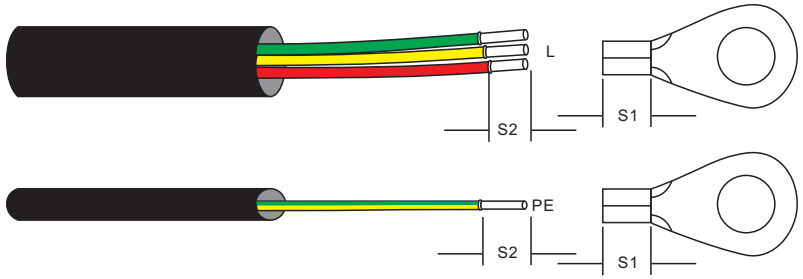


Figure 3.19 Strip AC cable

**NOTE**
S2 (insulation stripping length) is 2mm-3mm longer than S1.
(OT cable terminal crimping area)

2) Strip the insulation of the wire past the cable crimping area of the OT terminal, then use a hydraulic crimp tool to crimp the terminal. The crimped portion of the terminal must be insulated with heat shrinkable tube or insulating tape.

**NOTE:**
If chosing aluminum alloy cable, you must use copper aluminum transfer terminal in order to avoid direct contact between copper bar and Aluminum alloy cable. (Please select a copper aluminum transfer terminal based on your cable specification).

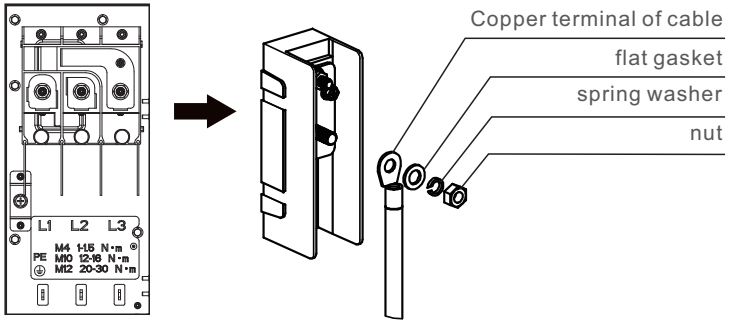


Figure 3.21 Copper aluminum transfer terminal



3. Installation

3. Remove the 3 screws on the inverter junction box and remove the junction box cover.

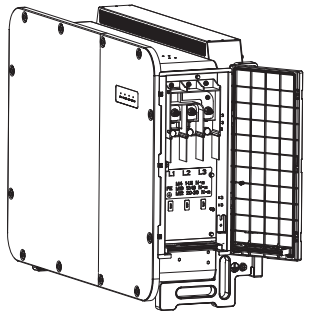

Figure 3.22

4. The corrugated pipe which covers the cable should extend into the box body, requiring an extension of more than 50mm. Select the matching cable wire hoop according to the AC cable diameter, thread the cable through the hoop, and use a socket wrench to connect the cable to the AC terminal strip in turn. The torque is 20-30Nm. Finally, Use cable ties to fix the AC cables at the reserved three positions.

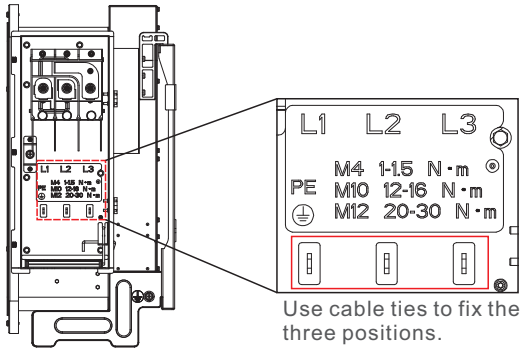


Figure 3.23

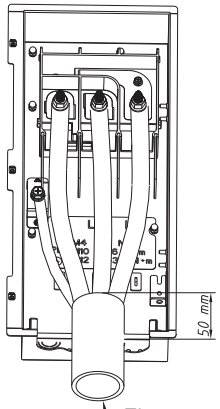


The corrugated pipe extends into the box body, requiring an extension of more than 50mm.

Figure 3.24

**NOTE**

Make sure that there should be no holes, seam or gaps in the cable waterproof connector.

5. Close the junction box lid.

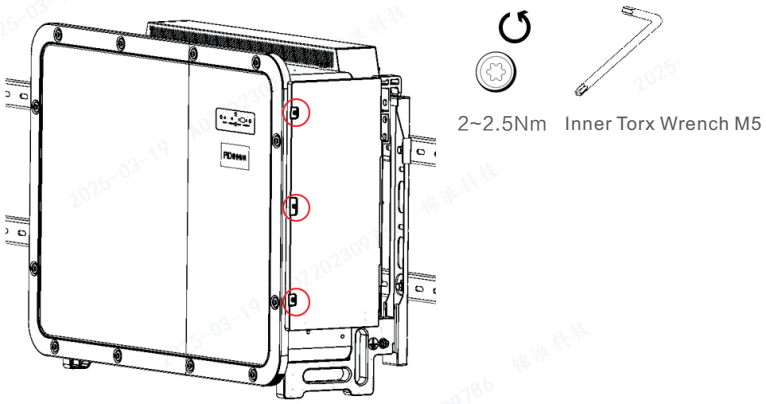


Figure 3.25





## 4.1 RS485 and PLC communication schematic

There are 5 communication ports on the inverter.

GPRS is a dedicated port for data acquisition monitoring sticks.

2*RS485 port is used for RS485 communication connection between inverters.

Multiple inverter monitoring system

Multiple inverters can be monitored via RS-485 daisy-chain configuration.

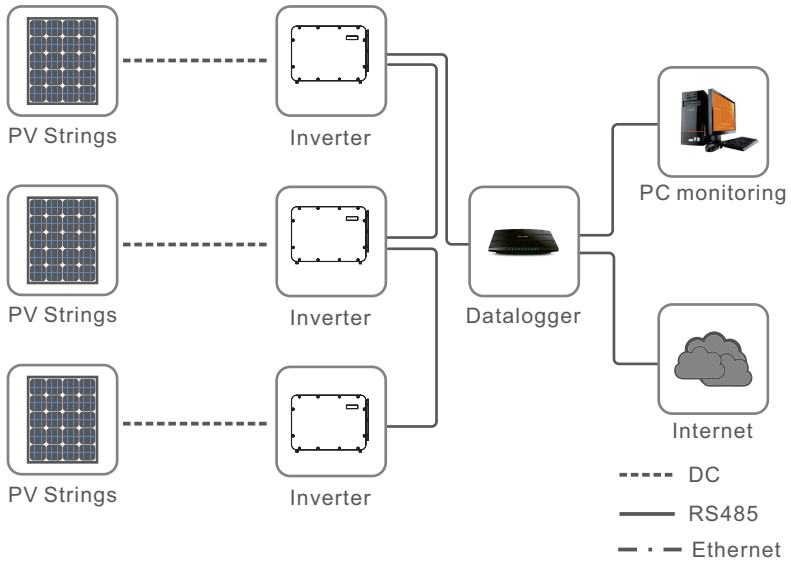


Figure 4.1 Multiple inverter monitoring system(RS485)

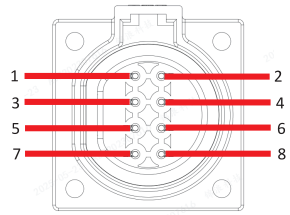


| Serial number | Label | Definition | Illustrate |
|---|---|---|---|
| 1 | RS485_1_A1 | RS485_A，RS485 Differential signals+ | RS485 signal interface for cascading inverters and connecting data collectors |
| 2 | RS485_1_B1 | RS485_B，RS485 Differential signals– | |
| 3 | RS485_1_A2 | RS485_A，RS485 Differential signals+ | RS485 signal interface for cascading inverters and connecting data collectors |
| 4 | RS485_1_B2 | RS485_B，RS485 Differential signals– | |
| 5 | PGND | RS485 Shielded ground | RS485 Shielded ground |
| 6 | PGND | RS485 Shielded ground | |
| 7 | RS485_2_A | RS485_A，RS485 Differential signals+ | It is used to connect sub-devices such as bracket controllers (currently reserved, development protocol is required for use) |
| 8 | RS485_2_B | RS485_B，RS485 Differential signals– | |

Figure 4.2 Pin definition

PLC is available for multiple inverter monitoring.

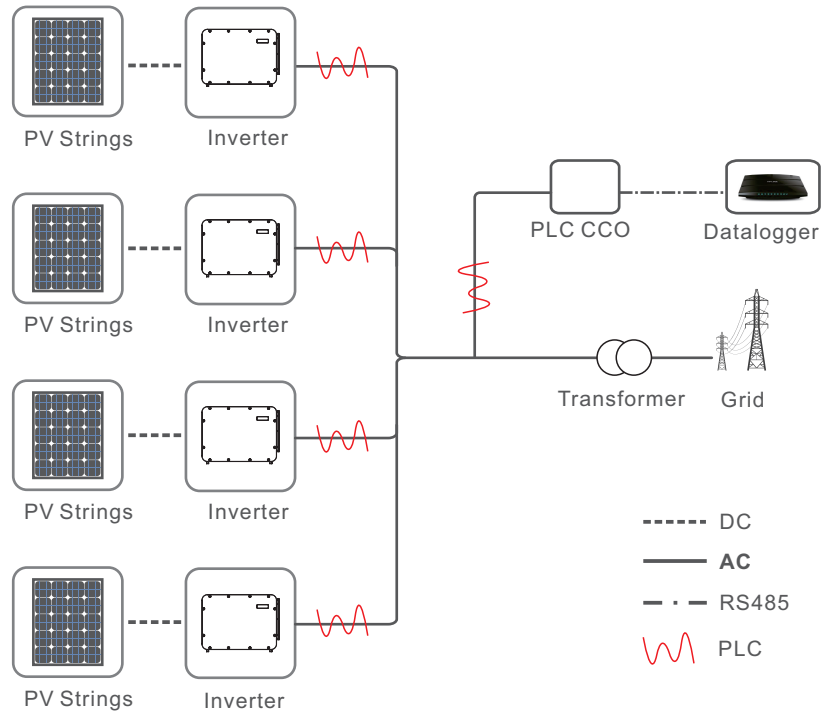


Figure 4.3 Multiple inverter monitoring system(PLC)

**NOTE**
RS485 and PLC can choose one of the two communication modes.



4. Comm. & Monitoring

## 4.2 Logic interface connection

Logic interface is required by some local regulations that can be operated by a simple switch or contactor(Not available in South Africa).
When the switch is closed the inverter can operated normally. When the switch is opened, the inverter will reduce it's output power to zero within 5s.
Pin5 and Pin6 of RJ45 terminal is used for the logic interface connection.

Please follow below steps to assemble RJ45 connector.

1.Insert the network cable into the communication connection terminal of RJ45.

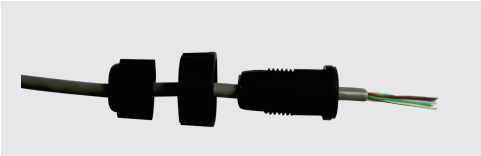

Figure 4.4 RJ45 communication connection terminals

2.Use the network wire stripper to strip the insulation layer of the communication cable. According to the standard line sequence of figure 4.5 connect the wire to the plug of RJ45, and then use a network cable crimping tool to make it tight.

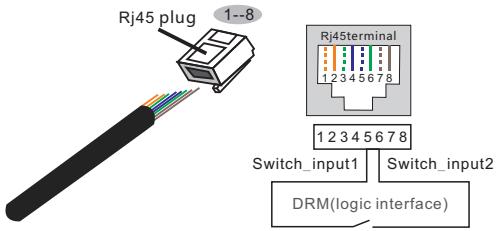


**Correspondence between the cables and the stitches of plug, Pin5 and Pin6 of RJ45 terminal is used for the logic interface, other Pins are reserved.**
Pin 1: Reserved; Pin 2: Reserved
Pin 3: Reserved; Pin 4: Reserved
Pin 5: Switch_input1; Pin 6: Switch_input2
Pin 7: Reserved; Pin 8: Reserved

Figure 4.5 Strip the insulation layer and connect to RJ45 plug

3.Connect RJ45 to DRM (logic interface) .

# 5. Start and Shutdown

## 5.1 Start-up procedure

To start-up the inverter, it is mandatory that the steps below are followed in the exact order outlined.

1. Ensure the commissioning checks in Section 5 have been performed.
2. Close the AC breaker
3. Ensure that PV3 has PV string connected. Place the "AUX. SWITCH" on the bottom of the inverter in the "ON" position. A click sound indicates that the switch has been fully closed. Observe the LED indicator light.

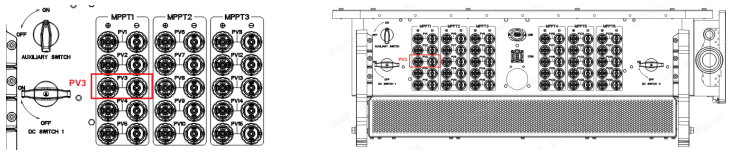


4. If the alarm indicator is constantly lit in red, Place "DC SWITCH 1" and "DC SWITCH 2" in the "ON" position.
If the alarm indicator light is not on after waiting for 1 minute, it is not allowed to turn on the "DC SWITCH". At the same time, immediately disconnect the "AUX. SWITCH" and check if the input cable is reversed or if the input voltage meets the starting voltage requirements. After correction, repeat step 3. If the alarm indicator light still does not light up, disconnect "AUX. SWITCH" and contact the technical support engineer.
5. If the inverter is running normally, turn off "AUX. SWITCH"

**CAUTION**
The inverter's surface temperature can reach up to 70℃ (162⁰ F). To avoid risk of burns, do not touch the surface when the inverter is in the operational mode. Additionally, the inverter must be installed out of the reach of children.

## 5.2 Shutdown procedure

To stop the inverter, it is mandatory that the steps below are followed in the exact order outlined.

1. Select "Grid Off" in the Advanced Setting of Inverter LED.
2. Turn off the AC Switch between Solis inverter and Grid.
3. Wait approximately 30 seconds (during this time, the AC side capacitors are dissipating energy). If the inverter has DC voltage above the start-up threshold, the red POWER LED will be lit. Switch the DC switch OFF.
4. Confirm all LED's switch OFF (~one (1) minute).

**CAUTION**
Although the inverter DC disconnect switch is in the OFF position and all the LED's are OFF, operators must wait five (5) minutes after the DC power source has been disconnected before opening the inverter cabinet. DC side capacitors can take up to five (5) minutes to dissipate all stored energy.



# 6. Normal operation

## 6.1 APP Download

Users need to download the APP before installing it for the first time.
There are three ways to download and install the latest APP:
1. You can visit **www.soliscloud.com** to download the latest version APP.
2. You can search "**Soliscloud**" in Google Play or App Store.
3. You can scan this QR code below to download "**Soliscloud**".

## 6.2 Log in the APP via bluetooth

Step 1: **Connect with Bluetooth.**
Turn on Bluetooth switch on your mobile phone and then open the Soliscloud APP.
Click "More Tools"->"Local Operation"->"Connect with Bluetooth"

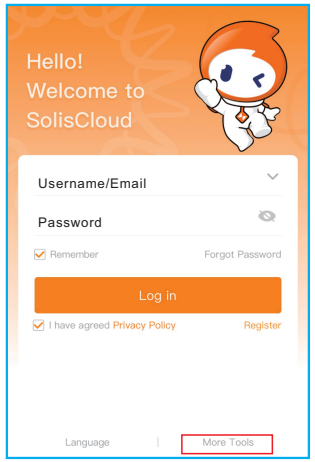


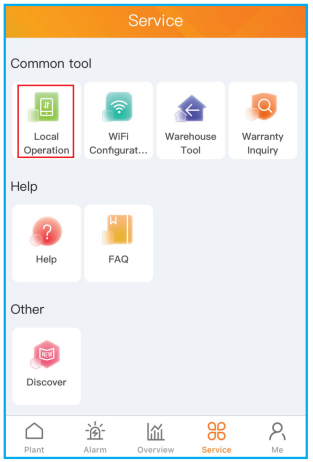


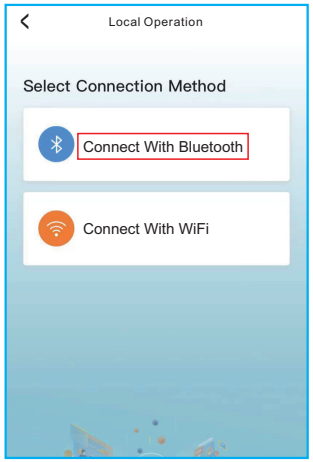


Step 2: Select the Bluetooth signal from the inverter. (Bluetooth Name: INV-Inverter SN)

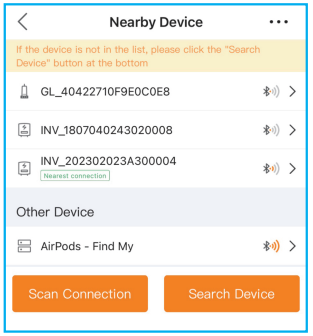

Step 3: **Login account.**
If you are the installer, please select the account type as Installer. If you are the plant owner, please select the account type as owner. Then set your own initial password for control verification. (The first log-in must be finished by installer in order to do the initial set up)

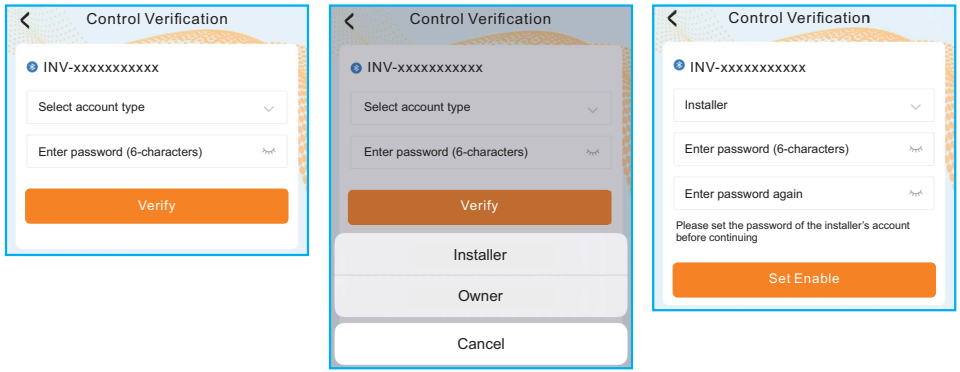


Step 4: Perform the setting configuration for Grid CodeSetting, etc.
Step 5: Switch on the AC breaker, wait till the inverter start generating.



6. Normal operation

The APP interface contains 4 sections:

1. Home
2. Info
3. Alarm
4. Settings

## 6.3 Home Page

The home page contains the power and energy data of the inverter.
The PV data and AC data are also available under this section.

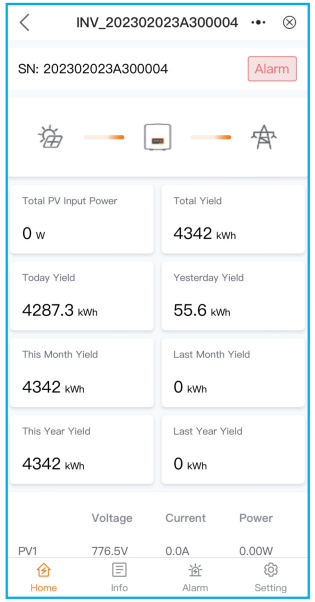

## 6.4 Info Page

Info page displays the general information of the inverter such as inverter serial number, firmware version, grid code, etc.

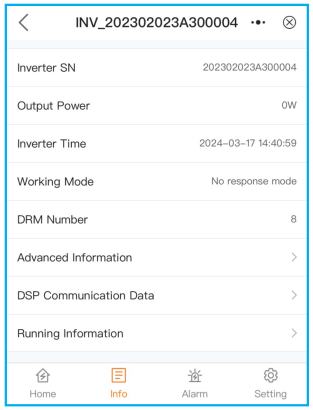


## 6.5 Alarm Page

Alarm page contains the alarm code of the inverter and its corresponding troubleshooting methods.

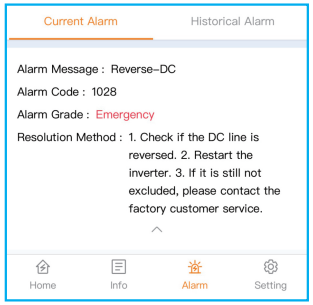




6. Normal operation

## 6.6 Setting Page

Setting page contains all the setting options of the inverter.

| Functions | Setting Path |
|---|---|
| Switch on/off the inverter | Settings -> “Power ON” & ”Power OFF” |
| Change inverter time setting | Settings -> Inverter Setting-> Inverter Parameter Setting -> Inverter Time Setting |
| Change inverter output power percentage or power factor | Settings -> Inverter Setting-> Inverter Power Setting |
| Set grid code and protection parameters | Settings -> Grid Parameter Setting -> Grid Code Setting |
| Set Export Power control | Settings -> EPM Setting |
| Set grid code related working modes | Settings -> Inverter Work Mode Setting -> Work Mode |

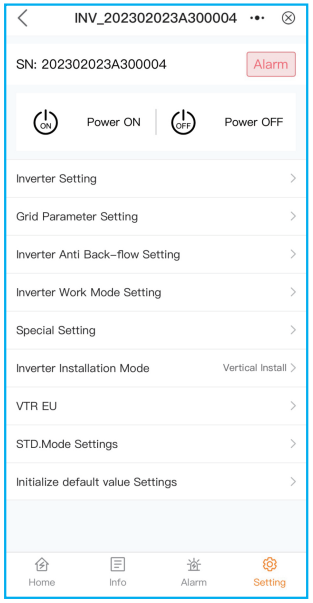


**NOTE:**
The inverter is by default setting with grid code which complies with local requirements. If there is need to modify the protection limits, please consult and approve by your local grid operator.

Solis Three Phase Inverter does not require any regular maintenance. However, cleaning the dust on heat-sink will help the inverter to dissipate the heat and increase its life time. The dust can be removed with a soft brush.

**CAUTION:**
Do not touch the inverter's surface when it is operating. Some parts of the inverter may be hot and cause burns. Turn off the inverter (refer to Section 5.2) and wait for a cool-down period before any maintenance or cleaning operation.

The LED status indicator lights can be cleaned with a damp cloth if they are too dirty to be read.

**NOTE:**
Never use any solvents, abrasives or corrosive materials to clean the inverter.

## 7.1 Anti-PID Function

Solis Three phase Inverters integrates optional Anti-PID module and it can recover the PID effect during night thus protect the PV system from degradation.

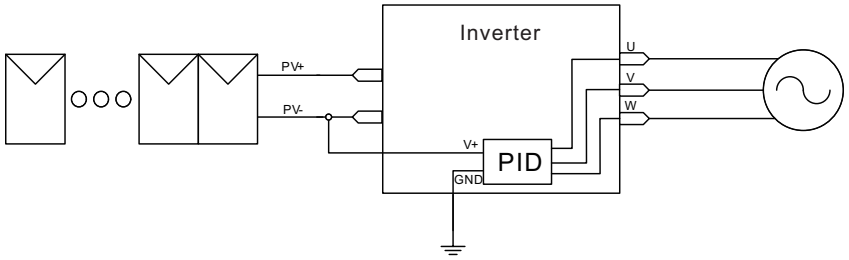


Figure 7.1

The Anti-PID module repairs the PID effect of the PV model at night. When operating, the inverter LED screen displays " PID-repairing " information, and the red light is on.
The Anti-PID function is always ON when AC is applied.
If maintenance is required and turn off the AC switch can disable the Anti-PID function.

**WARNING :**
The PID function is automatic. When the DC bus voltage is lower than 260Vdc, the PID module will start creating 650 Vdc between PV- and ground.
No need any control or settings



7. Maintenance

**NOTE:**
If you need to maintain the inverter at night, please turn off the AC switch first, then turn off the DC switch, and wait 20 minutes before you do other operations.

## 7.2 Night SVG

Inverter can output reactive power after this function is turned on, the range of reactive power can be set: -60%-60% rated power.
The setting step:
Step1. Inverter setting->Inverter function setting->Night SVG Switch.
Step2. Inverter setting->Inverter power setting->Night SVG Reactive power.

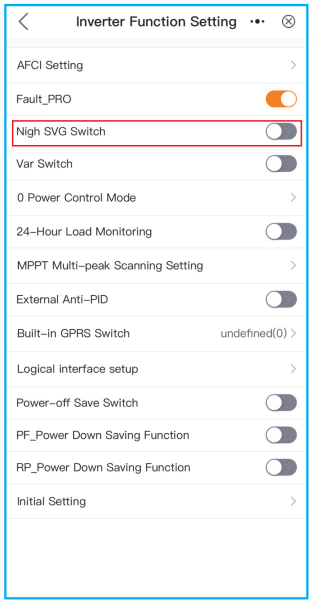


Step1

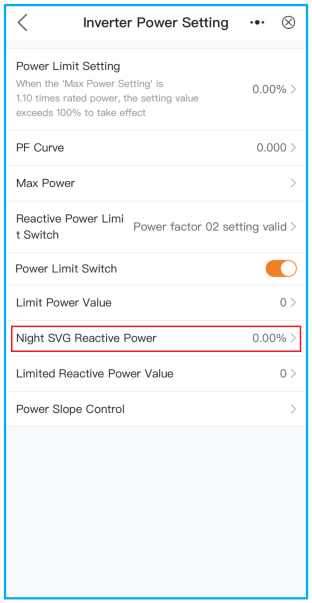


Step2

## 7.3 Fan Maintenance

If the fan does not work properly, the inverter will not be cooled effectively.
and it may affect the effective operation of the inverter .
Therefore, it is necessary to clean or replace a broken fan as follows:

1. Turn off the “Grid ON/OFF” switch on the inverter LED.
2. Disconnect the AC power.
3. Turn the DC switch to "OFF" position.
4. Wait for 15 minutes at least.
5. Remove the 2 screws on the fan plate.
6. pull out the fan module slowly and unplug the power plug of the fan after pulling out around 500mm.
7. Clean and replace the broken fan.
8. Connect the electrical wire and reinstall the fan. Restart the inverter.

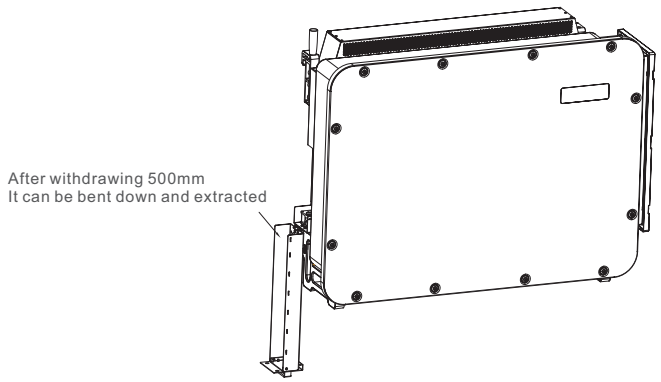


Figure 7.2





The inverter is designed in accordance with the most important international grid-tied standards and safety and electromagnetic compatibility requirements. Before delivering to the customer, the inverter has been subjected to several tests to ensure its optimal operation and reliability.

In case of failure, the LED screen will display an alarm message. In this case, the inverter may stop feeding into the grid. The failure descriptions and their corresponding alarm messages are listed in Table 8.1:

| Alarm Message | Failure description | Solution |
|---|---|---|
| No power | Inverter no power on LED | 1.Check PV input connections<br>2.Check if the DC input voltage higher than 620V<br>3.Check if PV+/- is reversed |
| LED show initializing all the time | Can not start-up | 1.Check if the connector on main board or power board are fixed.<br>2.Check if the DSP connector to power board are fixed. |
| OV-G-V01/02/03/04 | Over grid voltage | 1.Resistant of AC cable is too high. Change bigger size grid cable<br>2.Adjust the protection limit if it’s allowed by electrical company. |
| UN-G-V01/02 | Under grid voltage | 1.Use user define function to adjust the protection limit if it’s allowed by electrical company. |
| OV-G-F01/02 | Over grid frequency | |
| UN-G-F01/02 | Under grid frequency | |
| G-IMP | High grid impedance | |
| NO-GRID | No grid voltage | 1.Check connections and grid switch.<br>2.Check the grid voltage inside inverter terminal. |
| OV-DC01/02/03/04 | Over DC voltage | 1.Reduce the module number in series |
| OV-BUS | Over DC bus voltage | 1.Check inverter inductor connection<br>2.Check driver connection |
| UN-BUS01/02 | Under DC bus voltage | |
| GRID-INTF01/02 | Grid interference | 1.Restart inverter<br>2.Change power board |
| OV-G-I | Over grid current | |
| IGBT-OV-I | Over IGBT current | |
| DC-INTF<br>OV-DCA-I | DC input overcurrent | 1.Restart inverter<br>2.Identify and remove the string to the fault MPPT<br>2.Change power board |
| IGFOL-F | Grid current tracking fail | 1.Restart inverter or contact installer. |
| IG-AD | Grid current sampling fail | |
| OV-TEM | Over Temperature | 1.Check inverter surrounding ventilation.<br>2.Check if there’s sunshine direct on inverter in hot weather. |

8. Troubleshooting

| Alarm Message | Failure description | Solution |
|---|---|---|
| INI-FAULT | Initialization system fault | 1.Restart inverter or contact installer. |
| DSP-B-FAULT | Comm. failure between main and slave DSP | |
| 12Power-FAULT | 12V power supply fault | |
| PV ISO-PRO 01/02 | PV isolation protection | 1.Remove all DC input, reconnect and restart inverter one by one.<br>2.Identify which string cause the fault and check the isolation of the string. |
| ILeak-PRO 01/02/03/04 | Leakage current protection | 1.Check AC and DC connection<br>2.Check inverter inside cable connection. |
| RelayChk-FAIL | Relay check fail | 1.Restart inverter or contact installer. |
| DCinj-FAULT | High DC injection current | |
| Reve-DC | One of the DC string is reversely connected | 1. Please check the inverters' PV string polarity, if there are strings reversely connected wait for the night when the solar irradiance is low and the PV string current down below 0.5A. Turn off the two DC switchs and fix the polarity issue. |
| Screen OFF with DC applied | Inverter internally damaged | 1.Do not turn off the DC switches as it will damage the inverter.<br>2.Please wait for the solar irradiance reduces and confirm the string current is less than 0.5A with a clip-on ammeter and then turn off the DC switches.<br>3.Please note that any damages due to wrong operations are not covered in the device warranty. |

Table 8.1 Fault message and description

**NOTE**

Before grid connection, if the string has negative current, it means the voltage between the two strings of one MPPT is unbalanced.
One of two string may have more PV panels than another one.

**NOTE**

If the inverter displays any alarm message as listed in Table 8.1; please turn off the inverter (refer to Section 5.2 to stop your inverter) and wait for 15 minutes before restarting it (refer to Section 5.1 to start your inverter). If the failure persists, please contact your local distributor or the service center. Please keep ready with you the following information before contacting us.

1. Serial number of Solis Three Phase Inverter;
2. The distributor/dealer of Solis Three Phase Inverter (if available);
3. Installation date.
4. The description of problem (i.e. the alarm message displayed on the LED and the status of the LED status indicator lights. Other readings obtained from the Information submenu (refer to Section 5.2) will also be helpful.);
5. The PV array configuration (e.g. number of panels, capacity of panels, number of strings, etc.);
6. Your contact details.

| Model | S6-GU3P275K06-EV-ND |
|---|---|
| Max. DC input voltage (Volts) | 1500 |
| Rated DC voltage (Volts) | 1080 |
| Start-up voltage (Volts) | 500 |
| MPPT voltage range (Volts) | 480...1500 |
| Max. input current (Amps) | 6*70 |
| Max short circuit input current (Amps) | 6*105 |
| MPPT number/Max input strings number | 6/24 |
| Rated output power (Watts) | 275k |
| Rated grid voltage (Volts) | 3/PE, 800 |
| Grid voltage range (Volts) | 640-920 |
| Rated grid frequency (Hertz) | 50/60 |
| Grid frequency range (Hertz) | 45-55/55-65 |
| Max. output current (Amps) | 198.5 |
| Power Factor (at rated output power) | > 0.99 (0.8 leading - 0.8 lagging) |
| THDi (at rated output power) | <3% |
| Max.efficiency | 99.0% |
| EU efficiency | 98.7% |
| Dimensions (W*H*D) | 1098*813*378.5mm |
| Weight | 117kg |
| Topology | Transformerless |
| Self consumption (night) | < 3W |
| Operating ambient temperature range | -30℃...+60℃ |
| Relative humidity | 0~100% |
| Ingress protection | IP66 |
| Cooling concept | Intelligent redundant cooling |
| Max.operation altitude | 4000m |
| Grid connection standard | En50549, G99, AS4777.2, VDE0126, IEC61727, VDE4110, CEA 2019 |
| Safty/EMC standard | IEC62109-1/-2,EN61000-6-2/-4 |
| DC connection | Matching connector |
| AC connection | OT Terminal (max 400 mm²) |
| Display | LED，Bluetooth+APP |
| Communication connections | RS485, Optional: PLC |
| Warranty | 5 years (extend to 20 years) |
| Protective class | I |
| Max. inverter backfeed current to the array | 0 |
| Noise emission (typical) | ≤80 dB(A) |



9. Specifications

| Model | S6-GU3P300K06-EV-ND |
|---|---|
| Max. DC input voltage (Volts) | 1500 |
| Rated DC voltage (Volts) | 1080 |
| Start-up voltage (Volts) | 500 |
| MPPT voltage range (Volts) | 480...1500 |
| Max. input current (Amps) | 6*80 |
| Max short circuit input current (Amps) | 6*125 |
| MPPT number/Max input strings number | 6/30 |
| Rated output power (Watts) | 300k |
| Rated grid voltage (Volts) | 3/PE, 800 |
| Grid voltage range (Volts) | 640-920 |
| Rated grid frequency (Hertz) | 50/60 |
| Grid frequency range (Hertz) | 45-55/55-65 |
| Max. output current (Amps) | 216.5 |
| Power Factor (at rated output power) | > 0.99 (0.8 leading - 0.8 lagging) |
| THDi (at rated output power) | <3% |
| Max.efficiency | 99.0% |
| EU efficiency | 98.7% |
| Dimensions (W*H*D) | 1098*813*378.5mm |
| Weight | 117kg |
| Topology | Transformerless |
| Self consumption (night) | < 3W |
| Operating ambient temperature range | -30℃...+60℃ |
| Relative humidity | 0~100% |
| Ingress protection | IP66 |
| Cooling concept | Intelligent redundant cooling |
| Max.operation altitude | 4000m |
| Grid connection standard | En50549, G99, AS4777.2, VDE0126, IEC61727, VDE4110, CEA 2019 |
| Safty/EMC standard | IEC62109-1/-2,EN61000-6-2/-4 |
| DC connection | Matching connector |
| AC connection | OT Terminal (max 400 mm²) |
| Display | LED，Bluetooth+APP |
| Communication connections | RS485, Optional: PLC |
| Warranty | 5 years (extend to 20 years) |
| Protective class | I |
| Max. inverter backfeed current to the array | 0 |
| Noise emission (typical) | ≤80 dB(A) |

| Model | S6-GU3P333K06-EV-ND |
|---|---|
| Max. DC input voltage (Volts) | 1500 |
| Rated DC voltage (Volts) | 1080 |
| Start-up voltage (Volts) | 500 |
| MPPT voltage range (Volts) | 480...1500 |
| Max. input current (Amps) | 6*80 |
| Max short circuit input current (Amps) | 6*125 |
| MPPT number/Max input strings number | 6/30 |
| Rated output power (Watts) | 333k |
| Rated grid voltage (Volts) | 3/PE, 800 |
| Grid voltage range (Volts) | 640-920 |
| Rated grid frequency (Hertz) | 50/60 |
| Grid frequency range (Hertz) | 45-55/55-65 |
| Max. output current (Amps) | 240.3 |
| Power Factor (at rated output power) | > 0.99 (0.8 leading - 0.8 lagging) |
| THDi (at rated output power) | <3% |
| Max.efficiency | 99.0% |
| EU efficiency | 98.7% |
| Dimensions (W*H*D) | 1098*813*378.5mm |
| Weight | 117kg |
| Topology | Transformerless |
| Self consumption (night) | < 3W |
| Operating ambient temperature range | -30℃...+60℃ |
| Relative humidity | 0~100% |
| Ingress protection | IP66 |
| Cooling concept | Intelligent redundant cooling |
| Max.operation altitude | 4000m |
| Grid connection standard | En50549, G99, AS4777.2, VDE0126, IEC61727, VDE4110, CEA 2019 |
| Safty/EMC standard | IEC62109-1/-2,EN61000-6-2/-4 |
| DC connection | Matching connector |
| AC connection | OT Terminal (max 400 mm²) |
| Display | LED，Bluetooth+APP |
| Communication connections | RS485, Optional: PLC |
| Warranty | 5 years (extend to 20 years) |
| Protective class | I |
| Max. inverter backfeed current to the array | 0 |
| Noise emission (typical) | ≤80 dB(A) |



9. Specifications

| Model | S6-GU3P350K06-EV-ND |
|---|---|
| Max. DC input voltage (Volts) | 1500 |
| Rated DC voltage (Volts) | 1080 |
| Start-up voltage (Volts) | 500 |
| MPPT voltage range (Volts) | 480...1500 |
| Max. input current (Amps) | 6*80 |
| Max short circuit input current (Amps) | 6*125 |
| MPPT number/Max input strings number | 6/30 |
| Rated output power (Watts) | 350k |
| Rated grid voltage (Volts) | 3/PE, 800 |
| Grid voltage range (Volts) | 640-920 |
| Rated grid frequency (Hertz) | 50/60 |
| Grid frequency range (Hertz) | 45-55/55-65 |
| Max. output current (Amps) | 252.6 |
| Power Factor (at rated output power) | > 0.99 (0.8 leading - 0.8 lagging) |
| THDi (at rated output power) | <3% |
| Max.efficiency | 99.0% |
| EU efficiency | 98.7% |
| Dimensions (W*H*D) | 1098*813*378.5mm |
| Weight | 117kg |
| Topology | Transformerless |
| Self consumption (night) | < 3W |
| Operating ambient temperature range | -30℃...+60℃ |
| Relative humidity | 0~100% |
| Ingress protection | IP66 |
| Cooling concept | Intelligent redundant cooling |
| Max.operation altitude | 4000m |
| Grid connection standard | En50549, G99, AS4777.2, VDE0126, IEC61727, VDE4110, CEA 2019 |
| Safty/EMC standard | IEC62109-1/-2,EN61000-6-2/-4 |
| DC connection | Matching connector |
| AC connection | OT Terminal (max 400 mm²) |
| Display | LED，Bluetooth+APP |
| Communication connections | RS485, Optional: PLC |
| Warranty | 5 years (extend to 20 years) |
| Protective class | I |
| Max. inverter backfeed current to the array | 0 |
| Noise emission (typical) | ≤80 dB(A) |
| Maximum output fault current | 1260A@90ms |
| Current (inrush)a.c. A (peak and duration) | 23.4A@3ms |